REZNOR®

Revision: SCA-SCB-RPL (05-26) REV-0

Supersedes: P-SC (05-06) REV-A

REPLACEMENT PARTS FOR SEPARATED-COMBUSTION GAS-FIRED UNIT HEATERS

DISCONTINUED MODELS SCA AND SCB

TABLE OF CONTENTS

RATING PLATE AND SERIAL NUMBER 2
CABINET COMPONENTS 4
VENTER COMPONENTS 7
BURNER COMPONENTS 8
FAN AND MOTOR ASSEMBLY COMPONENTS 11
BLOWER COMPONENTS 12
ELECTRICAL COMPONENTS 24
DRIVE COMPONENTS 29
DAMPER COMPONENTS 34
SPECIAL MANIFOLD COMPONENTS 36

IMPORTANT

- **Always include complete model and serial number so that any specification change can be considered for parts replacement. It can save time and expense.**
- **In keeping with our policy of continuous product improvement, we reserve the right to alter any information shown here.**
- **Order by Part Number (PN) not by option designation.**

WE RESERVE THE RIGHT TO SUBSTITUTE FUNCTIONAL REPLACEMENTS.

Rating Plate and Serial No.

REZNOR
MERCER, PA. USA 16137

SEPARATED COMBUSTION SYSTEM
DUCT FURNACE
CATEGORY III
FOR INDUSTRIAL/COMMERCIAL USE ONLY
ANSI Z83.8 [**AA**] - [**A**] CGA 2.6 [**AA'**] -M [**A'**] DUCT FURNACE
MODEL [**B**] [**C**]
SERIAL NO. [**D**]
[**E**] VOLTS [**E**] PH [**E**] HZ MAXIMUM TOTAL INPUT [**E**] AMPS
TYPE OF GAS: [**F**] [**G**]
ORIFICE SIZE [**J**] DRILL HAS BEEN FACTORY ADJUSTED
FOR USE AT [**H**] FEET [**I**] METERS OF ALTITUDE.

	SEA LEVEL	ALT. ADJUSTED
NORMAL INPUT	[**R**]	[**K**]BTU/HR.
THERMAL OUTPUT CAPACITY	[**S**]	[**L**]BTU/HR.
MINIMUM INPUT(2,M,MV MODELS)	[**T**]	[**M**]BTU/HR.
NORMAL MANIFOLD PRESSURE		[**N**] IN.W.C.
MIN. PERMISSIBLE GAS SUPPLY PRESSURE FOR PURPOSE OF INPUT ADJUSTMENT.		[**O**] IN.W.C.

MAXIMUM THROUGHPUT [**P**] C.F.M.
MINIMUM THROUGHPUT [**Q**] C.F.M.

CLEARANCES TO COMBUSTIBLE CONSTRUCTION: FLUE CONN. -6", SERVICE SIDE-WIDTH OF UNIT, OPP. SIDE-6", BOTTOM-6", TOP-6"
MAY BE INSTALLED ON NONCOMBUSTIBLE FLOORS.
INSTALL ON THE POSITIVE PRESSURE SIDE OF AIR-CIRCULATING BLOWER.
THIS UNIT MAY BE INSTALLED DOWNSTREAM FROM A REFRIGERATION SYSTEM (USE DRAIN OPTION CS1).
THIS UNIT MAY BE VENTED VERTICALLY WHEN USING CONCENTRIC ADAPTOR ASSEMBLY, PART NO. 82131, SUPPLIED BY REZNOR.
FOR ALTERNATE INSTALLATIONS USE THE LATEST EDITIONS OF THE APPROPRIATE STANDARD LISTED BELOW:

FOR AIRCRAFT HANGARS	USE STANDARD ANSI/NFPA 409
FOR PARKING STRUCTURES	USE STANDARD ANSI/NFPA 88A
FOR REPAIR GARAGES	USE STANDARD ANSI/NFPA 88B

THIS UNIT IS FOR CONNECTION MINIMUM OF 10'-0" OR THE FOLLOWING MAXIMUM LENGTHS:
[**X**] IN. PIPE DIA. [**Y**] FEET MAX. COMBINED LENGTH

Key to Rating Plate Codes
AA-A = ANSI Code and Date
AA'-A' = CSA Code and Date
B = Model No.
C = Date of Manufacture
D = Serial No.
E = Volts, Phase, Hz, Amps
F = Type of Gas
H = Altitude (feet)
I = Altitude (meters)
J = Orifice Size
K = Normal Input Altitude Adjusted (BTUH)
L = Thermal Output Altitude Adjusted (BTUH)
M = Minimum Input Altitude Adjusted (BTUH)
N = Normal Manifold Pressure ("w.c.)
O = Minimum Gas Supply Pressure ("w.c.)
P = Maximum Air Throughput (CFM)
Q = Minimum Air Throughput (CFM)
R = Normal Input Sea Level (BTUH)
S = Thermal Output Sea Level (BTUH)
T = Minmum Input Sea Level (BTUH)
X = Pipe Diameter (inches)
Y = Maximum Combined Length (inches)

Blower Cabinet Rating Plate on Certified Packaged Units

REZNOR
MERCER, PA., U.S.A. 16137

PACKAGED DUCT FURNACE
FOR INDUSTRIAL/COMMERCIAL USE ONLY
DESIGN CERTIFIED FOR A.G.A REQUIREMENTS UNDER
[**A**] PACKAGED DUCT FURNACE STANDARD
MODEL [B] [C]
SERIAL NO. [D] HP
[**E**] VOLTS [**E**] PH [**E**] HZ MAXIMUM TOTAL INPUT [**E**] AMPS
IF EQUIPPED WITH **R.E.C.** OPTION, ADD [V] AMPS
EQUIPPED FOR OPERATION AT AN AIR FLOW OF [**F**] SCFM
AGAINST A STATIC PRESSURE OF [**G**] INCHES WATER COLUMN.
DRIVE NO. [**H**] WIRING DIAGRAM [**I**]
SEE MANUFACTURER'S INSTRUCTIONS FOR OTHER AIR FLOW CAPACITIES.
FILTERS, WHEN USED, MUST BE INSTALLED EXTERNAL TO THE HEATING CASING.
REFER TO THE RATING PLATE OF THE DUCT FURNACE FOR ADDITIONAL INFORMATION.

Key to Blower Cabinet Plate
A = Standard
B = Model
C = Date of Manufacture
D = Motor Horsepower
E = Volts/Phase/Hertz/Amps
F = SCFM
G = Static Pressure (w.c.)
H = Drive AM Option Code
I = Wiring Diagram No.

Identification Plate on Blower Cabinets Manufactured Prior to Package Certification (see dates on page 3)

HP Codes used on blower plate illustrated below

Single-Speed Motors		2-Speed Motors	
Code	HP	Code	HP
05	1	20	1/.44
06	1-1/2	21	1.5/.68
07	2	22	2/.88
08	3	23	3/1.3
09	5	24	5/2.2
11	7-1/2	25	7.5/3.3
12	15	26	10/4.4
13	10		
14	20		

REZNOR
MODEL NUMBER SERIAL NUMBER
DRIVE NO. WIRING DIAGRAM NO.
CFM _____ AT _____ IN. W.C. MAX. E.S.P. AND _____ HP
VOLTS PHASE HERTZ AMPERES

Serial No. Codes

BAA	66	H5	N	00000
1	2	3	4	5

1 - Date of manufacturer (see page 3)
2 - Type of pilot system (see Form P-VALVES)
3 - Type of gas valve (see Form P-VALVES)
4 - Gas (N= natural; L = propane)
5 - Consecutive number (identification only)

First Element of the Serial Number - Date of Manufacture

Year	Jan	Feb	Mar	Apr	May	June	July	Aug	Sept	Oct	Nov	Dec
1974	ZA	ZB	ZC	ZD	ZE	ZF	ZG	ZH	ZI	ZJ	ZK	ZL
1975	AAA	AAB	AAC	AAD	AAE	AAF	AAG	AAH	AAI	AAJ	AAK	AAL
1976	ABA	ABB	ABC	ABD	ABE	ABF	ABG	ABH	ABI	ABJ	ABK	ABL
1977	ACA	ACB	ACC	ACD	ACE	ACF	ACG	ACH	ACI	ACJ	ACK	ACL
1978	ADA	ADB	ADC	ADD	ADE	ADF	ADG	ADH	ADI	ADJ	ADK	ADL
1979	AEA	AEB	AEC	AED	AEE	AEF	AEG	AEH	AEI	AEJ	AEK	AEL
1980	AFA	AFB	AFC	AFD	AFE	AFF	AFG	AFH	AFI	AFJ	AFK	AFL
1981	AGA	AGB	AGC	AGD	AGE	AGF	AGG	AGH	AGI	AGJ	AGK	AGL
1982	AHA	AHB	AHC	AHD	AHE	AHF	AHG	AHH	AHI	AHJ	AHK	AHL
1983	AIA	AIB	AIC	AID	AIE	AIF	AIG	AIH	AII	AIJ	AIK	AIL
1984	AJA	AJB	AJC	AJD	AJE	AJF	AJG	AJH	AJI	AJJ	AJK	AJL
1985	AKA	AKB	AKC	AKD	AKE	AKF	AKG	AKH	AKI	AKJ	AKK	AKL
1986	ALA	ALB	ALC	ALD	ALE	ALF	ALG	ALH	ALI	ALJ	ALK	ALL
1987	AMA	AMB	AMC	AMD	AME	AMF	AMG	AMH	AMI	AMJ	AMK	AML
1988	ANA	ANB	ANC	AND	ANE	ANF	ANG	ANH	ANI	ANJ	ANK	ANL
1989	AOA	AOB	AOC	AOD	AOE	AOE	AOG	AOH	AOI	AOJ	AOK	AOL
1990	APA	APB	APC	APD	APE	APF	APG	APH	API	APJ	APK	APL
1991	AQA	AQB	AQC	AQD	AQE	AQF	AQG	AQH	AQI	AQJ	AQK	AQL
1992	ARA	ARB	ARC	ARD	ARE	ARF	ARG	ARH	ARI	ARJ	ARK	ARL
1993	ASA	ASB	ASC	ASD	ASE	ASF	ASG	ASH	ASI	ASJ	ASK	ASL
1994	ATA	ATB	ATC	ATD	ATE	ATF	ATG	ATH	ATI	ATJ	ATK	ATL
1995	AUA	AUB	AUC	AUD	AUE	AUF	AUG	AUH	AUI	AUJ	AUK	AUL
1996	AVA	AVB	AVC	AVD	AVE	AVF	AVG	AVH	AVI	AVJ	AVK	AVL
1997	AWA	AWB	AWC	AWD	AWE	AWF	AWG	AWH	AWI	AWJ	AWK	AWL
1998	AXA	AXB	AXC	AXD	AXE	AXF	AXG	AXH	AXI	AXJ	AXK	AXL
1999	AYA	AYB	AYC	AYD	AYE	AYF	AYG	AYH	AYI	AYJ	AYK	AYL
2000	AZA	AZB	AZC	AZD	AZE	AZF	AZG	AZH	AZI	AZJ	AZK	AZL
2001	BAA	BAB	BAC	BAD	BAE	BAF	BAG	BAH	BAI	BAJ	BAK	BAL
2002	BBA	BBB	BBC	BBD	BBE	BBF	BBG	BBH	BBI	BBJ	BBK	BBL
2003	BCA	BCB	BCC	BCD	BCE	BCF	BCG	BCH	BCI	BCJ	BCK	BCL
2004	BDA	BDB	BDC	BDD	BDE	BDF	BDG	BDH	BDI	BDJ	BDK	BDL
2005	BEA	BEB	BEC	BED	BEE	BEF	BEG	BEH	BEI	BEJ	BEK	BEL
2006	BFA	BFB	BFC	BFD	BFE	BFF	BFG	BFH	BFI	BFJ	BFK	BFL
2007	BGA	BGB	BGC	BGD	BGE	BGF	BGG	BGH	BGI	BGJ	BGK	BGL
2008	BHA	BHB	BHC	BHD	BHE	BHF	BHG	BHH	BHI	BHJ	BHK	BHL
2009	BIA	BIB	BIC	BID	BIE	BIF	BIG	BIH	BII	BIJ	BIK	BIL
2010	BJA	BJB	BJC	BJD	BJE	BJF	BJG	BJH	BJI	BJJ	BJK	BJL
2011	BKA	BKB	BKC	BKD	BKE	BKF	BKG	BKH	BKI	BKJ	BKK	BKL
2012	BLA	BLB	BLC	BLD	BLE	BLF	BLG	BLH	BLI	BLJ	BLK	BLL
2013	BMA	BMB	BMC	BMD	BME	BMF	BMG	BMH	BMI	BMJ	BMK	BML
2014	BNA	BNB	BNC	BND	BNE	BNF	BNG	BNH	BNI	BNJ	BNK	BNL
2015	BOA	BOB	BOC	BOD	BOE	BOF	BOG	BOH	BOI	BOJ	BOK	BOL

Date Series was Introduced or Re-certified (may affect parts selection)

Series changes indicate when that Model was recertified by the approval agency. The Series is identified in the Model No. of the unit. The number following the model of the heater is the series umber (Example: SC300-6, "6" is the Series No.). Replacement parts may be affected by the introduction of a new series. NOTE: Series 6 has significant changes; select parts carefully.

Introduction - Month/Year (Serial No. Date Code) of Furnace Certification					
	Models	Series 1	Series 3	Series 5	Series 6
ANSI Std	SC	3/74 (ZC)	9/82 (AHI)	4/89 (AOD)	10/93 (ASJ)
	SCA	3/74 (ZC)	9/82 (AHI)	4/89 (AOD)	10/93 (ASJ)
	SCB	3/74 (ZC)	9/82 (AHI)	4/89 (AOD)	10/93 (ASJ)
	SCE	8/74 (ZH)	9/82 (AHI)	4/89 (AOD)	10/93 (ASJ)
	SSCBL	1/92 (ARA)			1/97 (AWA)
C.G.A. Std	SC	3/75 (AAC)	--	--	10/93 (ASJ)
	SCA	3/75 (AAC)	9/82 (AHI)	1/91 (AQA)	10/93 (ASJ)
	SCB	3/75 (AAC)	9/82 (AHI)	1/91 (AQA)	10/93 (ASJ)
	SCE	--	9/82 (AHI)	1/91 (AQA)	10/93 (ASJ)
	SSCBL				1/97 (AWA)

NOTE: Manufacture of Models SCA/SCB was discontinued in 2001.

Model SSCDBL

Model SSCDBL replacement parts are not specifically listed. Look for the equivalent SSCBL Model as listed below.

SSCDBL	Consists of:
800	(2) Model SSCBL 400 Packaged Systems
1000	(2) Model SSCBL 500 Packaged Systems
1200	(2) Model SSCBL 600 Packaged Systems
1400	(2) Model SSCBL 700 Packaged Systems
1600	(2) Model SSCBL 800 Packaged Systems

Model SSCDBL Configuration

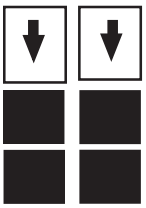

Two BL Blower Cabinets - All Sizes

2 Furnace Sections - Size 800

4 Furnace Sections - Sizes 1000, 1200, 1400, 1600

Exterior Cabinet Parts - Furnace Section

Model SC Series 6 - shows design change in control side of cabinet (exploded view below shows control side in Series 3 and 5)

REZNOR® Label, **P/N 196689**
Gray Sealant (3M 900 Duct Sealer Fast Bond), **P/N 100117**

Model SSCBL (parts apply to each furnace section)

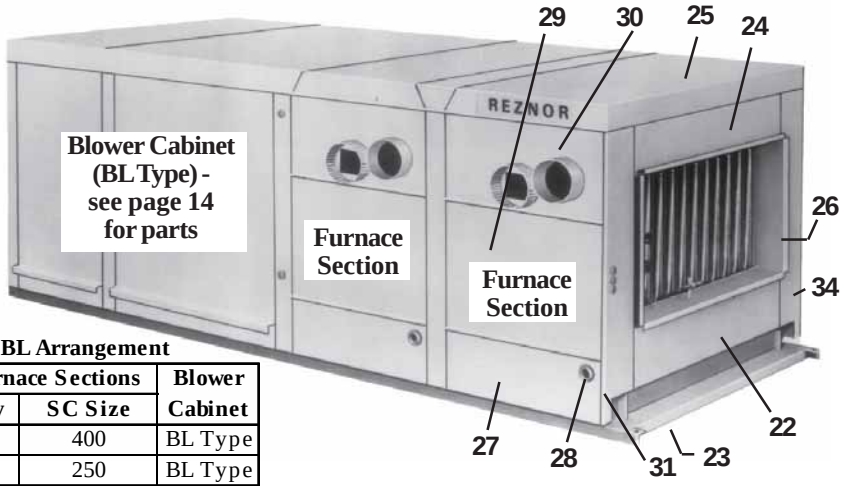

Model SSCBL Arrangement

Model Size	Furnace Sections Qty	Furnace Sections SC Size	Blower Cabinet
400	1	400	BL Type
500	2	250	BL Type
600	2	300	BL Type
700	2	350	BL Type
1050	3	350	BL Type
1200	3	400	BL Type

Tawny Beige Touch-Up PAINT
10 oz Spray Can, **P/N 37919**

Furnace Section Exterior Cabinet Parts (shaded areas) - Models SC, SCA, SCB, SCE

NOTE: Exterior casing parts for SC series prior to Series 3 are no longer available.

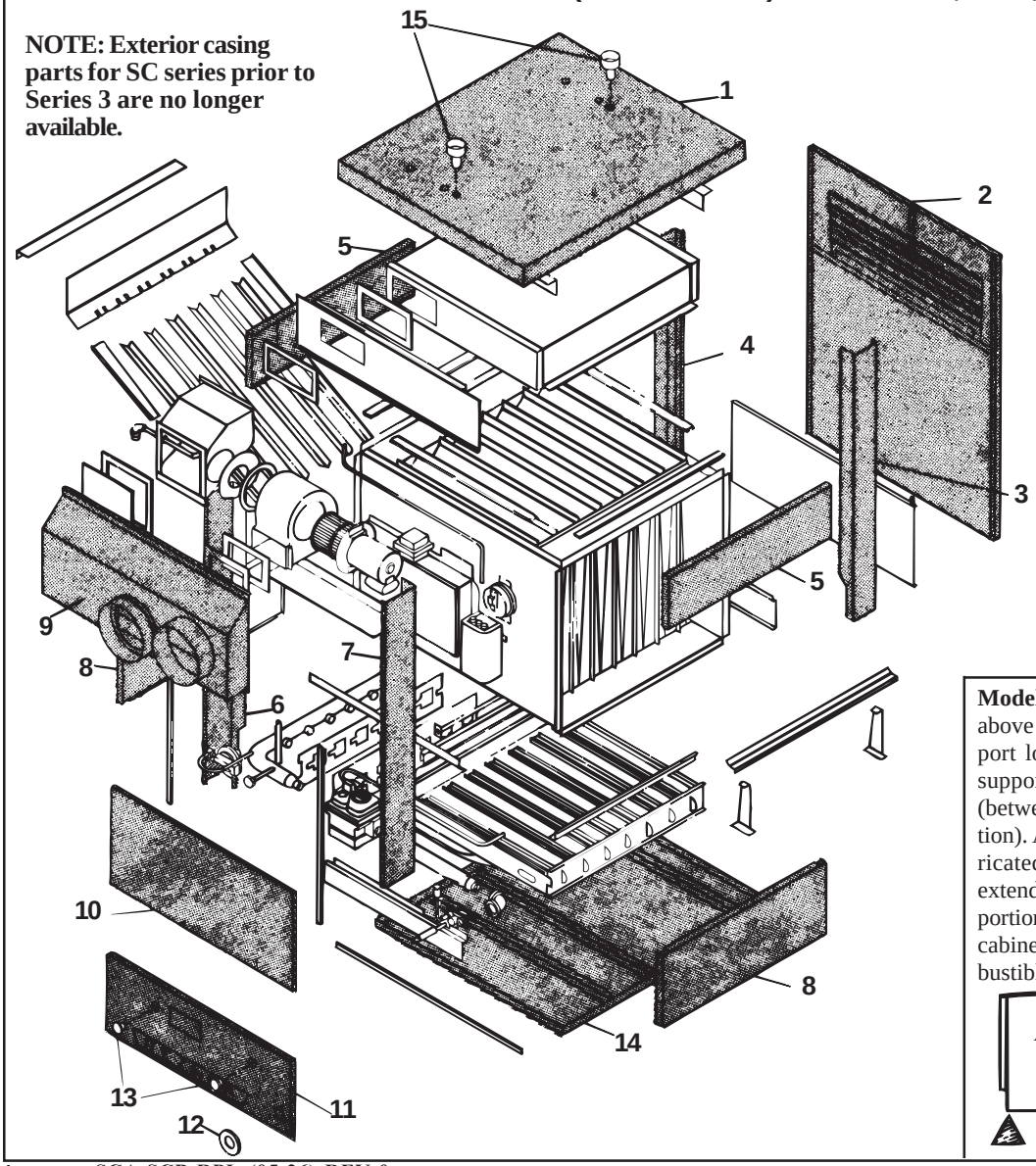

Codes 17 and 18 - Louvers

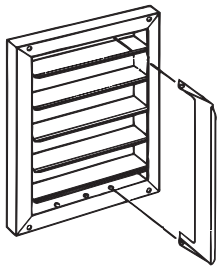

Code 16 - Mounting Supports for Models SC and SCE

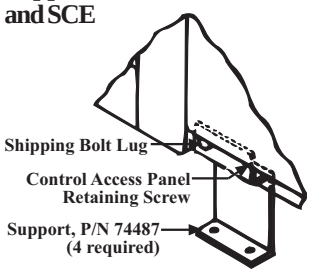

Model SCE - P/N 74487 as illustrated above may be used at the four corner support locations. Do not use this type of support at the center support locations (between the furnace and the blower section). At the center locations, a field-fabricated, angle-iron brace support must extend horizontally, jointly supporting a portion of both the furnace and the blower cabinet. All supports must be non-combustible.

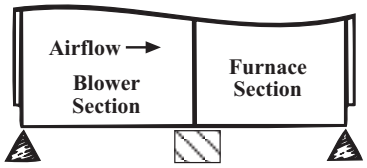

Furnace Section Exterior Cabinet Parts - Models SC, SCA, SCB, SCE (If application is not indicated, part applies to Models SC, SCA, SCB and SCE; quantity not listed in parenthesis is one.)

Code	Description	Application	Size							
			100	125	150/175	200/225	250	300	350	400
1	Casing Top Assy with insulation	SC prior to Series 6	■	103900	103901	103902	103903		103904	103905
		SCA,SCB,SCE prior to Series 6	■	74574	74575	74576	74577		74578	74579
		SC Series 6	125309	125310	125311	125312	125313		125314	125315
		SCA,SCB,SCE Series 6	125567	125568	125569	125570	125571		125572	125573
2	Right Casing Side Panel	with insulation - SC	80582			80585				
		SCA,SCB,SCE	11819			11849				
3	Corner Leg - Right Front	SC,SCA,SCB,SCE	10309			10311				
4	Corner Leg - Right Rear	SC	10310			10312				
		SCA,SCB,SCE	10310			11005				
5	Top Front & Top Back (2)	with insulation - SC	126330	64667	64669	80574	80576		80578	80580
		SCA,SCB,SCE	10861	10869	10875	10886	10892		10900	10906
6	Left Rear Corner Leg Assy (control side)	All prior to Series 6	■	68426		68428				
		Series 6	126109			126110				
7	Left Front Corner Leg Assy (control side)	All prior to Series 6	■	68425		68427				
		Series 6	126111			126112				
8	Bottom Front and Rear Panel Assy with insulation (2)		67693	64662	64664	80561	80564		80567	80570
9	Venter Panel (or Shroud) Assy	SC Series 3 and 5	■	80587		68417				
		SCA,SCB,SCE Series 3 and 5	■	68410		68417				
		All Series 6	125351			130224				
10	Access Panel Assy	Prior to Series 6	■	82527	82527	82527	82527	82527	82527	82527
		All Series 6	126012							
11	Bottom Left Side Panel Assy	SC prior to Series 6, Natural Gas	■	80572		68430		68432		
		SC prior to Series 6, Propane Gas	■	80572		68430				
		SCA,SCB,SCE prior to Series 6	■	68430						
	Bottom Left Side Panel with Grommet and Sight Hole Cover	SC Series 6 (Sizes 100-175 include insulation)	125695			125692		125693		
		SCA,SCB,SCE Series 6	125692					125693		
12	Vinyl Grommet		102607					15021		
13	Lighter Hole Plug Assy	Prior to Series 6	■	1074						
14	Bottom Pan Assy	Aluminized, SC prior to Series 6	■	80557	80559	68338	68340		68342	68344
		Aluminized, SCA,SCB,SCE prior to Series 6	■	68333	68336	68338	68340		68342	68344
		Stainless steel, prior to Series 6	■	84922	84925	84926	84927		84929	84930
		Aluminized, All Series 6	125267	125268	125269	125270	125271		125272	125273
		Stainless steel, All Series 6	129516	129517	129518	129519	129520		129521	129522
15	Hanger Assy (2)		9557							
16	Mounting Support	SC or SCE (4 required)	74487							
17	Louver Frame with Horizontal Louvers	Horizontal louvers are std on Models SCA & SCB; vertical are optional. Horizontal and vertical louvers are optional on Model SCE. (See illustrations, pages 11 & 12)	10020	10018	10016	10014	10012		10010	10001
17A	Horizontal Louver only		(5)9923	(5)9887	(5)9847	(5)9808	(10)9769		(10)9733	(10)9553
18	Vertical Louver only		(4)9554		(6)9554	(8)9554	(10)9554		(12)9554	(14)9554
18A	Maroon Touchup Paint for Louvers, 12 oz can		207432							
19	30° Outlet Nozzle Assy	SCA or SCB - same as Option CD2	132896	44881	44882	44883	44884		44885	44886
	60° Outlet Nozzle Assy	SCA or SCB - same as Option CD3	132897	44888	44889	44890	44891		44892	44896
20	Condensate Drain Kit	SC, SCE, SSCBL - same as Option CS1	31765							

Code 19 - Outlet Nozzles and Components

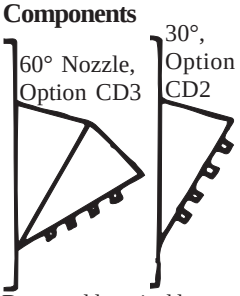

Side, All Sizes - P/N **44870**, (4) CD3; (2) CD2

Top - (2) CD3; (1) CD2

125	**44872**
150-175	**44873**
200-225	**44874**
250-300	**44875**
350	**44876**
400	**44877**

Do not add vertical louvers to CD3 on an SCA unit.

Code 20 - Condensate Drain Kit

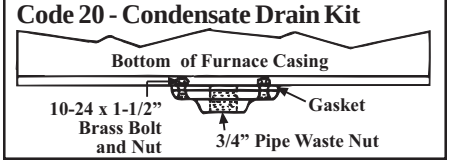

Furnace Section Exterior Cabinet Parts - Model SSCBL only (parts apply to each furnace section)

Code	Description		400	500	600	700	800	1050	1200
22	Bottom Front & Rear Panel (2)		100042	100040		100041	100042	100041	100042
23	Furnace Bottom Pan	Aluminized	100005	100003		100004	100005	100004	100005
		Stainless Steel	104930	104928		104929	104930	104929	104930
24	Top Front & Rear Panel (2)		100035	100033		100034	100035	100034	100035
25	Casing Top Assy		100293	100291		100292	100293	100292	100293
26	Furnace Right Side Panel Assy		103649						
27	Furnace Bottom Left Side Panel		100125						
28	Vinyl Grommet		15021 3/4"	102607 1/2"	15021 3/4"				
29	Furnace Center Left Side Panel		113593						
30	Furnace Top Left Side Panel Assy		113646						
31	Left Rear Furnace Leg (not illustrated)		100013						
32	Left Front Furnace Leg		100011						
33	Right Rear Furnace Leg (not illustrated)		100012						
34	Right Front Furnace Leg		100010						
35	Top Seal Brace (not illustrated)		100168	100166		100167	100168	100167	100168

Furnace Section Interior Cabinet Parts and Gaskets - All Models

NOTE: Series 5 unit is illustrated. See page 4 for photos of Model SC Series 6 and a Model SSCBL

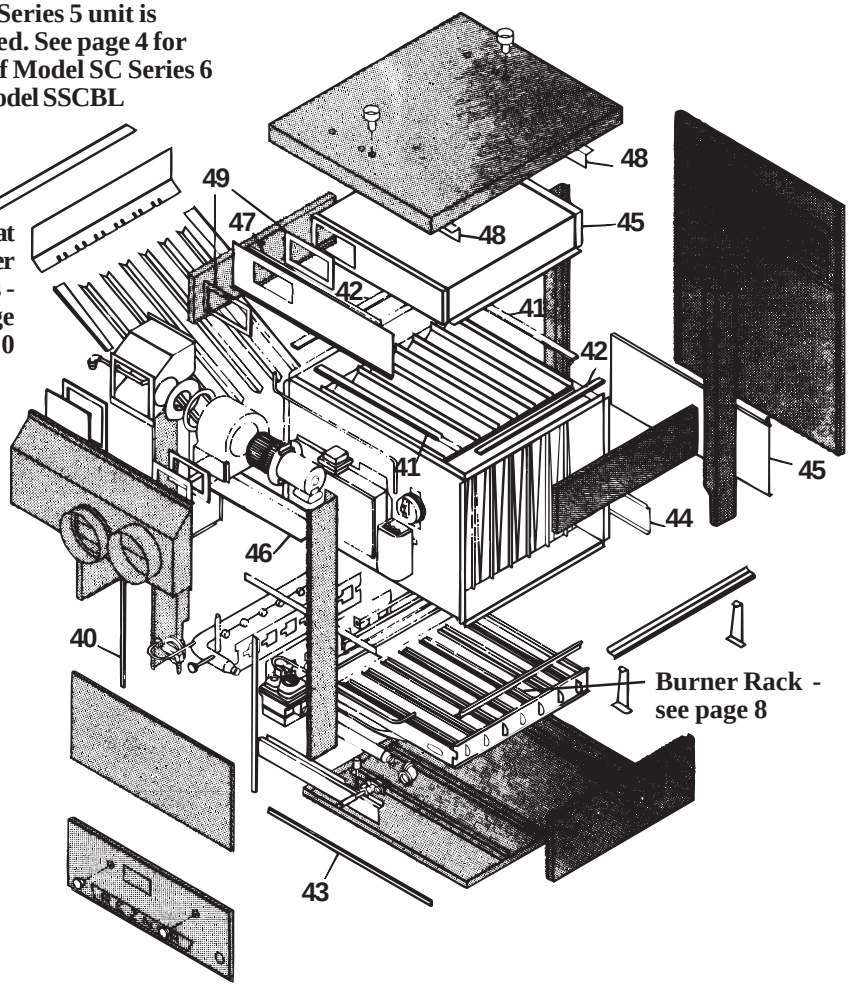

Code 70 - Combustion Air Pressure Switch

For units mfgd beginning 7/04 (except SC Series models with Option AG 39, 40, 41, or 42 gas controls) for altitudes to 4000 ft, **P/N 204327** setpoint 0.58 ± .05"w.c.**;** for altitudes above 4000 ft**, P/N 204328**, Setpoint 0.52 ± .05" w.c.

For SC/SCE units mfgd beginning 7/04 with Option AG39 or 40 and 1st furnace of SSCBL with Opt AG41 or 42 gas controls, P/N 204325 for Sizes 100-225 or **PN 204326** for SC/SCE Sizes 250-400 and SSCBL 400-1200.

For units mfgd between 12/91 and 7/04 (except SC Series Models with Option AG39/40/41/42 gas controls), for altitudes to 4000 ft, order replacement kit **P/N 193810;** for altitudes above 4000 ft**, P/N 193811.**

For SC/SCE units mfgd between 12/91 and 7/04 with Option AG39 or 40 and 1st furnace of SSCBL with Opt AG41 or 42 gas controls, P/N 193813 for Sizes 100-225 or **PN 193812** for SC/SCE Sizes 250-400and SSCBL 400-1200.

For SC Series 3 and 5 and SSCBL prior to 1/94, for altitudes to 4000 ft, **P/N 68266,** Tri-Delta #FS$100-4871; for altitudes above 4000 ft**, P/N 113234.**

For SC units prior to Series 3 (9/82), P/N 38712, Cleveland Controls ANA-100-14-20

Connector and Filler Parts (not illustrated) **for Connecting Heat Exchangers in Model SSCBL Systems with Two or Three Furnaces**

SSCBL Size	400	500/600	700	800	1050	1200
Top Filler Assy	--	(1)**115693**	(1)**115694**	(1)**115692**	(2)**115694**	(2)**115692**
Side Filler	--	(2)**105632**				
Top & Btm Duct Connector	--	(2)**106338**	(2)**106339**	(2)**106340**	(2)**106339**	(2)**106340**
Side Duct Connector	--	(2)**106395**				

Code	Description	SSCBL					500/600	700/1050	400/800/1200
		SC(A)(B)(E)	100	125	150/175	200/225	250/300	350	400
40	Gasket on Control Side Corner Leg	SC, SCA, SCB, SCE prior to Series 6	■	90314		90315			
41	Side Gasket (2)		62933						
42	Front and Rear Gasket Strip (2)		62921	62922	62924	62926	62928	62930	
43	Gasket on Control End Bottom Pan	SC, SCA, SCB, SCE prior to Series 6	■	82530					
44	Burner Rack Back Brace		9525						
45	Rear Seal Plate		38616						
46	Radiation Shield	Prior to Series 6	■	68422					
		All Series 6	125403						
47	Seal Plate		68423			68424			
48	Hanger Angle (2)		31904			11012			
49	Outlet Duct Gasket (2)		31900						
50	Flue Collection Box Assy	Prior to Series 6	■	68345	68347	68349	68351	68353	68355
		Series 6	125264	125265	125266	125274	125275	125276	125469
51	Horizontal Leg Support (not illustrated)		**124592** - between right corner leg and heat exchanger						

Venter Parts for an obsolete Model PV Series unit:

Size	PV125-175	PV200-400
Replacement Venter Motor - order by voltage (remove housing to install)		
115V	P/N **29992**	P/N **29994**
208V	P/N **30229**	P/N **30233**
230V	P/N **30231**	P/N **30235**
Replacement Venter Sail Switch		
	P/N **7299**	P/N **13925**
Replacement Combustion Air Switch, Tri Delta #FP 4258, PV125-400, **P/N 17155**		

Venter Assembly

Flue Duct and Venter Parts for SC/SCE units without 20-100% electronic modulation Option AG 39 or 40; all furnaces in an SSCBL unit without Option AG 41 or 42; and 2nd and 3rd furnaces in an SSCBL unit with Option 41 or 42.

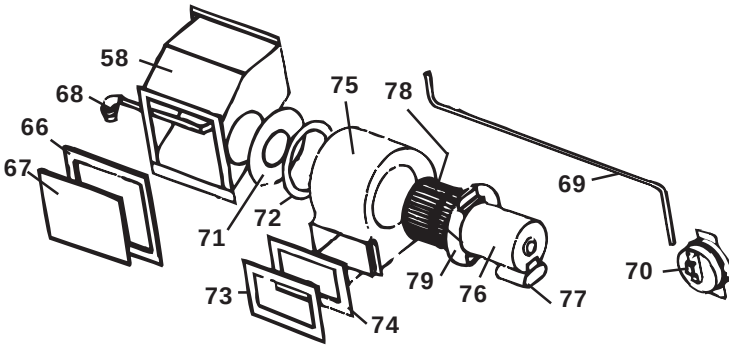

Flue Duct and Venter Parts for single furnace with Option AG39 or AG40 and the first furnace in multiple furnace units with Option AG41 or AG42.

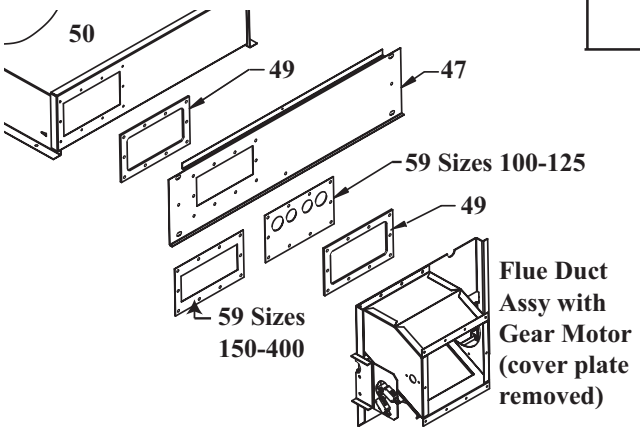

Flue Duct and Venter Assembly for Options AG 39, 40, 41, 42
(1st furnace only with Option AG41and AG42)

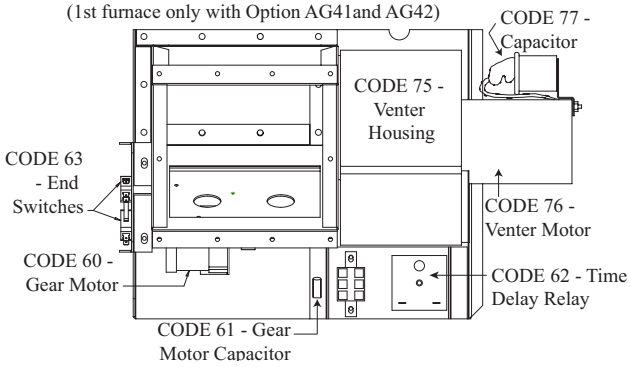

Code	Description	SSCBL							500	600	700/1050	400/800/1200
		SC, SCA, SCB, SCE	**100**	**125**	**150**	**175**	**200**	**225**	**250**	**300**	**350**	**400**
58	Flue Duct Assembly for SC(A)(B)(C) Series 3, 5 & 6 without Opt AG 39 or 40; and SSCBL without Opt AG 41 or 42 and 2nd & 3rd furnaces with Opt AG 41 or 42		**68375**									
59	Flue Duct Restrictor	For SC/SCE with Option AG 39 or 40, and 1st furnace of SSCBL with AG 41 or 42 mfgd beginning 11/03	**174817**	**174818**								
60	Gear Motor		**206144**								■	**206144**
61	Gear Motor Capacitor, 15MFD		**206145**								■	**206145**
62	Time Delay Relay		(2) **206146**								■	(2) **206146**
63	Safety End Switch	All w/AG39, AG40, AG41 & AG42	(2) **174812**								■	(2) **174812**
64	Replacement Gear Motor Kit (to replace solenoid actuator)	For SC/SCE with Option AG 39 or 40, and 1st furnace of SSCBL with AG 41 or 42 mfgd before 11/03	**208474** (Kit to replace the solenoid valve actuator with a gear motor actuator.)								■	**208475**
65	Replacement Solenoid Actuator only (select by voltage - same apply to Sizes 400/800/1200)		**174847** (460V)								■	**174847**
			174846 (208/230V)								■	**174846**
			174814 (115V)								■	**174814**
66	Cover Plate Gasket	Series 3, 5 and 6 and SSCBL	**41996**									
67	Flue Duct Cover Plate	Series 3, 5 and 6 and SSCBL	**41995**									
68	Sensing Tube Assy	Series 3 and 5 and SSCBL prior to 1/94	■	**68401**								
		Series 6 & SSCBL 1/94 to 9/99	**123912** (Replacement Kit including sensing tube, P/N 175800, and 15" tubing, P/N 176125)									
		Series 6 and SSCBL beginning 9/99	**175800**									
69	Pressure Switch Tubing	Series 3 & 5 and SSCBL prior to 1/94	■	**21183**, 1/4" x 24" long								
		Series 6 and SSCBL beginning 1/94	**125402**, 6-1/4" long, red silicone									
70	Pressure Switch - Replacement depends on manufacture date, altitude, and electronic modulation options; see application and P/N's listed on page 6.											
71	Venter Restrictor or Inlet Ring	Series 3 and 5	■	**68382**	**43255**	**43257**	**68386**	**68388**	**68390**	**68392**	**43260**	**68399**
		Series 6 w/Aluminized Heat Exchanger	**125855**	**125856**	**125857**	**125858**	**125859**	**68386**	**68388**	**43259**	**43260**	**63899**
		Series 6 with Stainless Steel Exchanger	**125855**	**43254**	**125857**	**43257**	**125859**	**43258**	**68388**	**68392**	**125862**	**125863**
		Series 6 w/Opt AG 39 or 40 or 1st furance of SSCBL w/Opt AG41 or 42	**175786**	**68388**	**68386**	**68390**	**43250**	**175787**	**43260**	**62594**	■	**62594**
72	Venter Gasket	Series 3, 5, and 6	**44695**									
73	Venter Seal Gasket		**68420**									
74	Venter Seal Plate		**68421**									
75	Venter Housing Assy		**68380**								**68397**	
76	Venter Motor only - Prior to Series 3	115V, Fasco 7162-3845	■	**36860**								
		208V, Universal JE1E0101	■	**98157**								
	Venter Motor Replacement Kits for Series 3 & 5 and SSCBL - includes motor, capacitor, and mounting plate (select by voltage; 460V does not include a capacitor)	115V or 575V	**132377**									
		208V or 230V	**132378**									
		460V	**132379**									
	Venter Motor only - All Series 6	115V, Fasco	**163891** (replaces 125350)									
		208/230V, Fasco 7162-3846	**163892** (replaces 125672)									
		460V, Fasco 7162-3847	**163893** (replaces 125673)									
77	Motor Capacitor only		**163894** (replaces 103181)									
78	Venter Wheel for Series 3, 5, and 6 & SSCBL, Torrington		**43425**, AD326-215-101-2, 5/16								**43814**, AD424-215-101-2, 5/16	
	Venter Wheel prior to Series 3, Torrington		■	**29340**, AA408-201-1								
79	Venter Motor Mounting Plate Assy - All Series 6		**125344**								**125345**	
80	Spiral Spacers #8 x 3/4" - All Series 6 (not illustrated)		(4) **97721**									

Burner Rack and Components - Applies to all Furnaces (one per furnace section)

Code 81 - Burner Rack

Series 6 Natural Gas Burner Rack with two flash carryovers (one on each end)

Gas Valve - See Form P-VALVES

Series 6 Propane Gas Burner Rack with air shutters and a regulated carryover with carryover tube and drip shield. (has a flash carryover on the end opposite the orifices)

Code 93 **Gas Valve - See Form P-VALVES**

Codes 87 and 88 - Carryover Tube and Drip Shield

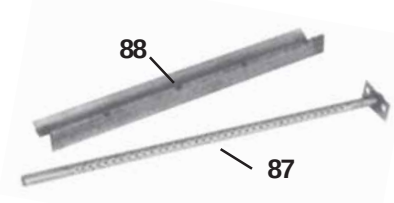

Code 91 - Manifold

Code 92 - Burner Orifices

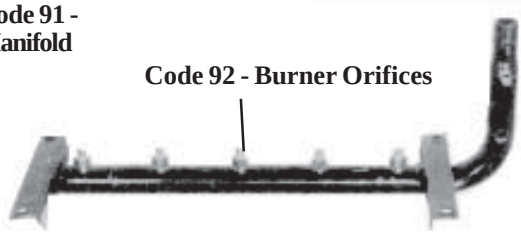

Code 93 - Carryover Regulator Assembly for all Propane Gas

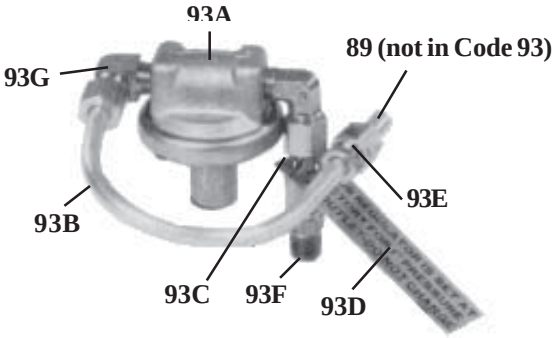

Codes 94A-D - Air Shutter Hardware for Propane Gas Burner Rack

Regulated Carryover and Air Shutters for Propane Gas Burner

Code	Description	All Sizes
93	Regulated Carryover Assy - Propane (includes Codes 93A-K)	100712
93A	Carryover Regulator, Maxitrol RV-12, Propane Gas	11294
93B	Carryover Regulator Tubing 1/4" x 5-1/2"	9681
93C	Carryover Regulator Tubing 1/4" x 1-1/4"	11892
93D	Carryover Regulator Tag	11935
93E	Carryover Regulator Fitting (Compression Fitting)	9664
93F	Carryover Regulator Fitting, Regulator to Manifold	1436
93G	Carryover Regulator Fitting, 90° Brass Elbow	(2) 18224
94A	Air Shutter Adjustment Screw, 1/4-20 x 2-1/2" long	10653
94B	Air Shutter Screw Nut, 1/4" -20	10650
94C	Air Shutter Slide Tinnerman Nut, 1/4"-20 (not illustrated)	10651
94D	Air Shutter Adjustment Instruction Tag	11934

Code 95 - Carryover Regulator used with Modulation Gas Control Options AG39 or AG40 or 1st furnace of SSCBL with Options AG41 or 42, P/N 11294

See illustration in Code 328 on page 26.

Code 92 - Burner Orifices (sea level)

								500	600	700, 1050	400, 800, 1200
		100	**125**	**150**	**175**	**200**	**225**	**250**	**300**	**350**	**400**
	Qty	4	5	7	7	9	9	12	12	14	16
Natural Gas	P/N	11972	84437	11833	84437	11828	84437	11833	84437	84437	84437
	Drill	#41	#42	#44	#42	#43	#42	#44	#42	#42	#42
Propane Gas	P/N	61652	61652	11830	61652	11830	61652	11830	61652	61652	61652
	Drill	1.45 MM	1.45 MM	#55	1.45 MM	#55	1.45 MM	#55	1.45 MM	1.45 MM	1.45 MM

Code	Description		100	125	150/175	200/225	500/ 600 / 250/300	700/ 1050 / 350	400/ 800/ 1200 / 400
81	Burner Rack with **Aluminized** Steel Burners for **Natural or Propane** (includes main burners, one flash carryover, carryover lighter tube, aeration panel, and air shutter guide) - *must order and field install* burner rack skirt, Code 81A.	**Prior to** Series 6	■	**65973**	**65974**	**65975**	**65976**	**65977**	**65978**
	Burner Rack with **Stainless Steel** Burners for **Natural or Propane** (includes main burners, one flash carryover, carryover lighter tube, aeration panel, and air shutter guide) - *must order and field install* burner rack skirt, Code 81A.		■	**65981**	**65982**	**65983**	**65984**	**65985**	**65986**
81A	Burner Rack Skirt - *must* be field-installed on pilot side of burner rack. Position skirt, mark holes, drill, and attach with sheetmetal screws.		■	**126108**					
81	Burner Rack with **Aluminized** Steel Burners for **natural gas** (includes main burners, two flash carryovers, aeration panel, burner rack skirt and auxiliary sensing probe)	SC, SCA, SCB, SCE, SSCBL **Series 6** (If unit has Gas Control Option AG39, AG40, AG41, or AG42 see below)	**125287**	**125288**	**125289**	**125290**	**125291**	**125292**	**125293**
	Burner Rack with **Stainless** Steel Burners for **natural gas** (includes main burners, two flash carryovers, aeration panel, burner rack skirt, and auxiliary sensing probe)		**131995**	**131996**	**131997**	**131998**	**131999**	**132000**	**132001**
	Burner Rack with **Aluminized** Steel Burners for **propane gas** (includes main burners, one flash carryover, aeration panel, regulated carryover lighter tube, air shutters, burner rack skirt, and auxiliary sensing probe)		**125698**	**73749**	**73751**	**73754**	**73757**	**73760**	**73762**
	Burner Rack with **Stainless** Steel Burners for **propane gas** (includes main burners, one flash carryover, aeration panel, regulated carryover lighter tube, air shutters, burner rack skirt, and auxiliary sensing probe)		**132067**	**132068**	**132069**	**132070**	**132071**	**132072**	**132073**
	Replacement burner rack for Models SC, SCE, SSCBL with 20-100% modulation ***with Option AG39 or AG40*** or 1st furnace of Model SSCBL with Option AG41 or AG42, natural gas only, is the same stainless steel burner rack as used with propane gas.	SC, SCE, SSCBL **w/** Opt AG 39 or 40 and 1st furnace of SSCBL w/ Opt AG 41 or 42	**132067**	**132068**	**132069**	**132070**	**132071**	■	**132073**
82	Main Burner Tube only	Qty	(4)	(5)	(7)	(9)	(12)	(14)	(16)
		Aluminized	**85218**						
		Stainless Steel	**87954**						
83	Flash Carryover (one piece)	Series 6 natural gas have two per burner rack; Series 6 propane and all Series 3 & 5 have one per burner rack	**63128**	**63131**	**63138**	■	■	■	■
84	Flash Carryover Right Section		■	■	■	**63148**	**63141**	**63148**	**63152**
85	Flash Carryover Left Section		■	■	■	**63144**			
86	Flash Carryover Center Section		■	■	■	■	**63156**	**68071**	
87	Carryover Lighter Tube (Tube only)	All prior to Series 6 and Series 6	**9899**	**9859**	**9821**	**9783**	**9747**	**9711**	**9520**
88	Carryover Lighter Tube Drip Shield	Propane only	**15015**	**15014**	**15013**	**15012**	**15011**	**15010**	**14957**
89	Carryover Orifice (NOTE: Series 6 Natural Gas does not have a carryover lighter tube except for heaters with 20-100% modulation, Options AG 39, 40, 41, or 42)	Natural Gas - prior to Series 6 — P/N	■	**9680**			**10370**	**9792**	**11872**
		Natural Gas - prior to Series 6 — Drill		(65)			(59)	(54)	(52)
		Propane Gas - all — P/N	**9870**		**9680**		**10370**	**38274**	
		Propane Gas - all — Drill	(70)		(65)		(59)	(57)	
		Natural Gas w/Opt AG 39 or 40 or 1st furnace of SSCBL with Opt AG 41 or 42 — P/N	**9870**		**9680**		**10370**	■	**9791**
		Natural Gas w/Opt AG 39 or 40 or 1st furnace of SSCBL with Opt AG 41 or 42 — Drill	(70)		(65)		(59)		(56)
90	Burner Rack Isinglass		(2) **10756**						
91	Manifold (less orifices)		**86338**	**86339**	**86340**	**86342**	**86343**	**86344**	**86345**

Manual Gas Valves - All Furnaces (Reference: For electric gas valves, see Form P-VALVES. Electric gas valves are identified from the heater Serial No.; see page 2.)

Pilot Shutoff Valve, P/N 3284

Ball Valve Adapter

1", P/N 110758;
1-1/4", P/N 110759;
1/2", P/N 120373;
3/4", P/N 120169

125 PSIG Gas Valve

1", P/N 159725;
1-1/4", P/N 159729

Aluminum Shutoff Valves

1/2", P/N 196910,
with Union, **P/N 15971;**
3/4", P/N 196911,
with Union, **P/N 15972**

Heat Exchanger - Applies to all Models (one heat exchanger per furnace section; directional baffles apply as listed)

Code	Description	SSCBL / SC,SCA,SCB,SCE	Qty	100	125	150, 175	200, 225	500, 600 / 250, 300	700, 1050 / 350	400, 800, 1200 / 400
100	Heat Exchanger for SC, SCB, SCE, SSCBL **(replacement gaskets, Code 101, are required)**	Aluminized Steel	1	**44301**	**44304**	**44307**	**44310**	**44313**	**44316**	**44319**
		409 Stainless Steel	1	**44302**	**44305**	**44308**	**44311**	**44314**	**44317**	**44320**
		321 Stainless Steel	1	**44303**	**44306**	**44309**	**44312**	**44315**	**44318**	**44321**
	Heat Exchanger for SCA **(replacement gaskets, Code 101, are required)**	Aluminized Steel	1	**44301**	**44304**	**44307**	**44310**	**30001**	**30002**	**30003**
		409 Stainless Steel	1	**44302**	**44305**	**44308**	**44311**	**30004**	**30005**	**30006**
		321 Stainless Steel	1	**44303**	**44306**	**44309**	**44312**	**30007**	**30008**	**30009**
101	Heat Exchanger Gaskets for SC, SCA, SCB, SCE Series 3, 5, & 6 and SSCBL **(required with replacement heat exchanger)**		2	**62921**	**62932**					
			2	**62933**						
102	Heat Exchanger Baffle Assy	Model SC	1	**55094**	**55095**	**55096**	**55097**	**55098**	**55099**	**55100**
103	Finger Baffle Support Bracket	Model SC	→	**55101** (2)	(2)	(2)	(2)	(4)	(4)	(4)
104	Finger Baffle	Model SC	→	**45399** (3)	(4)	(6)	(8)	(11)	(13)	(15)
105	Bottom Baffle Support	Model SC	1	**46478**	**46484**	**46489**	**46494**	**46499**	**46504**	**46509**
106	Rear Top Baffle Support	Model SC, HSC and SSCBL discharge unit	1	**55103**	**55104**	**55106**	**55108**	**55110**	**55112**	**55114**
107	Rear Top Baffle	Model SC	1	**55116**	**55117**	**55119**	**55121**	**55123**	**55125**	**55127**
108	Side Finger Baffle	Model SC	2	**55128**	**55128**	**55128**	**55128**	**55128**	**55128**	**55128**
109	Rear Top Baffle	Model HSC and SSCBL discharge unit	1	**55228**	**55229**	**55231**	**55233**	**55235**	**55237**	**55239**
110	Heat Exchanger Tube Baffles ("V" with Turbulators)	Series 6 - All Models	→	**125170** (4)	(5)	(7)	(9)	(12)	(14)	(16)

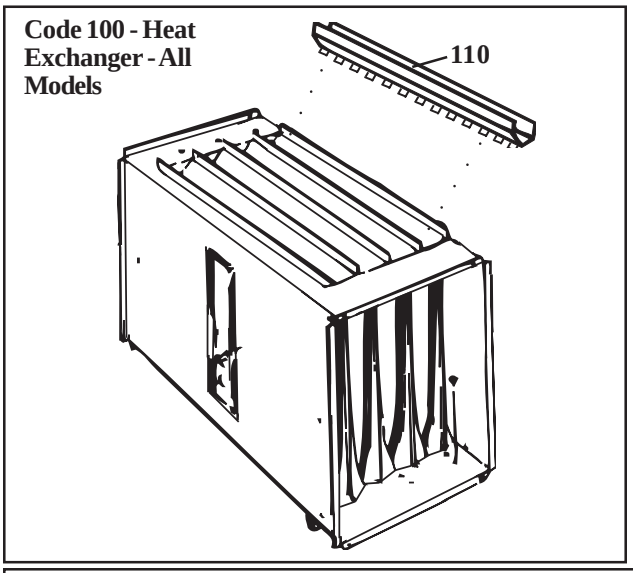

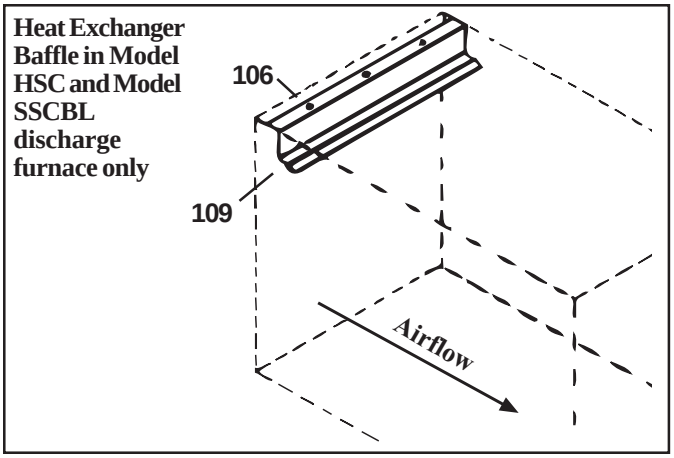

Heat Exchanger Directional Air Baffles

Directional air baffles cannot be installed in the replacement heat exchanger at the factory. They must be ordered separately and installed in the field.

1) Model SC is equipped with a heat exchanger directional air baffle assembly (Code 102) as illustrated below.

When replacing a heat exchanger, check to see if the baffle assembly can be salvaged. If the baffle assembly cannot be salvaged, order and install a replacement.

2) Model HSC and the discharge furnace only on a Model SSCBL are equipped with only a rear top baffle support (Code 106) and a rear top baffle (Code 109). If these parts cannot be salvaged, order and install replacements.

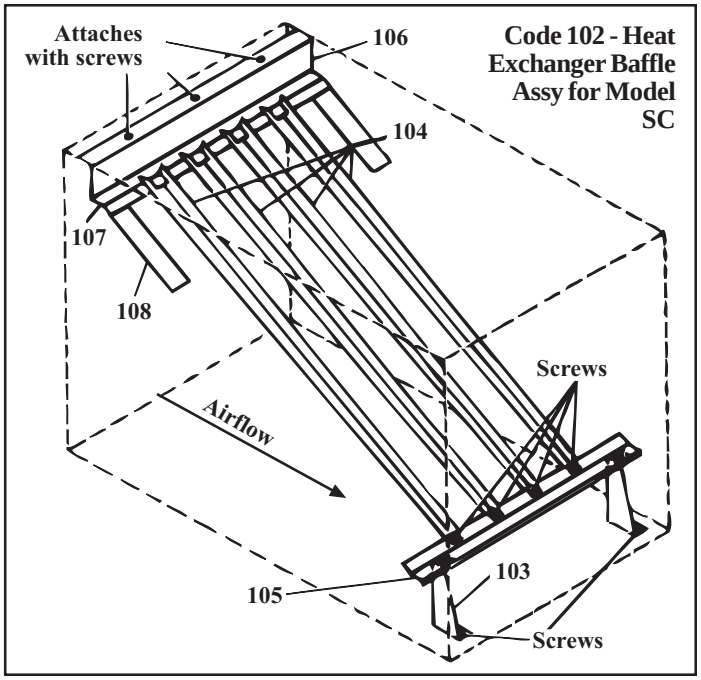

Vent Terminal/Combustion Air Intake Components - All Models (one per furnace)

Code	Qty	P/N	Description
115	1	**205883**	**Complete Horizontal** Vent Terminal/Combustion Air Kit **(Same as Option CC6)** includes Codes 117, 118, 119, 120, 121, 124
116	1	**205896**	**Complete Vertical** Vent Terminal/Combustion Air Kit **(Same as Option CC2)** includes Codes 117, 118, 120 (not used), 122, 123, 124
Components:			
117	1	**205885**	Concentric Adapter Box Assembly (CC2 & CC6)
118	2	**207232**	Concentric Adapter Box Bracket (CC2 & CC6)
119	1	**205894**	Inlet Guard for Horizontal (Option CC6)
120	4	**37661**	#10-16 x 1/2" lg Screws to attach CODE 119
121	1	**53316**	Screened Exhaust for Horizontal (Option CC6)
122	1	**53330**	Inlet Air Cap for Vertical (Option CC2)
123	1	**53326**	Exhaust Cap for Vertical (Option CC2)
124	1	**53335**	Tube of High Temperature (450°F) Silicone Sealant
125	High Temperature Aluminum Tape, 1" x 10 yds (not illustrated), Same as Option FA1, **P/N 98206**		

Code 117 - Concentric Adapter Assy for Separated Combustion Installation -- required on all Models

Heater Side **Terminal Side**

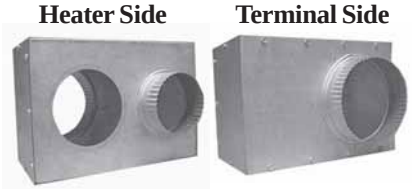

Code 119 - Inlet Guard for Horizontal Inlet (replaces inlet screen)

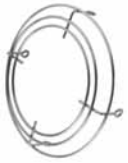

Code 122 - Inlet Air Cap for Vertical Inlet

Code 121 - Screened Exhaust Cap for Horizontal Vent

Code 123 - Exhaust Cap for Vertical Vent

Fan Components for Model SCA Fan-Type Unit Heater -

add to cabinet parts on pages 4-5

Front View Showing Standard Horizontal Louvers

Rear View Showing Fan (Sizes 250-400 have dual fans)

Code	Description	Application (Model SCA)	Size						
			100	125	150/175	200/225	250/300	350	400
130A	Casing Back Panel	All Series 6	--	**59289**	**59291**	**59293**	**73801**	**73802**	**73803**
		C.G.A. Units prior to Series 6	■	**59289**	**59291**	**59293**	**59295**	**59297**	**59299**
130B	Fan Back	Size 100 Series 6	**125137**	■	■	■	■	■	■
130C	Fan Back Sides	Size 100 Series 6	(2)**125136**	■	■	■	■	■	■
131	Fan Blade	A.G.A. units prior to Series 6	■	**125563** (replaces 3701) Lau F07H0 1533, 15x38x1/2	**3501**, 18x33x1/2	**141598** (replaces 12625)	(2) **125566**, Lau F07H0 1631, 16x36x1/2 (replaces 9774)	(2)**3501**, 18x33x1/2	(2)**141598** (replaces 12625)
		C.G.A. units prior to Series 6	■		**141598** (replaces 12625)	**141598**, Lau F07H07 17.540 (replaces 43211)		(2) **141598**, Lau F07H07 17.540 (replaces 43211)	(2)**48701**, 16x30x1/2
		All Series 6	**41004**, Lau FP-1437		**125564**, Lau F07H0 1729			(2) **125566**, Lau F07H0 15.531, 15.5x31x1/2 (replaces 9774)	(2) **141598**, Lau F07H07 17.540 (replaces 43211)
		Used with enclosed motor (Opt AL14)	**41004**	**125563**	**125564**	**141598**	(2) **125566**	(2) **125564**	(2) **141598**
132	Fan Guard		**110910**	**54328**, 16"	**45616**, 18"		(2) **54328**, 16"	(2) **45616**, 18"	
133	Motor, 115V	All A.G.A. Units & C.G.A. Series 6	**95548**, 1/30HP	**9892**, 1/20HP	**55681**, 1/8HP	**88781**, 1/6HP	(2) **55681**, 1/8HP	(2) **88781**, 1/6HP	
		C.G.A. Units prior to Series 6	■	**102380**, 1/8HP (replaces 45888)	**16072**, 1/6HP (replaces 115416)		(2) **102380**, 1/8HP (replaces 45888)	**16072**, 1/6HP (replaces 115416)	(2) **115417**, 1/4HP (replaces 45890)
	Enclosed Motor, 115V, (Option AL14)		**102380**, 1/8HP	**16072**, 1/6HP (replaces 115416)		**115417**, 1/4HP	(2) **16072**, 1/6HP (replaces 115416)		(2)**115417**, 1/4HP

Blower Components for Model SCB Blower-Type Unit Heater and Model SCE Blower-Type Unit with a Blower Cabinet - add to cabinet parts on pages 4-5

For blower motor, see pages 17-20.
For drive components, see pages 27-31.

Front View of Model SCB Showing Standard Horizontal Louvers

Rear View of Model SCB Showing Blower (Sizes 250-400 have dual blowers)

SCE Rear View Showing Standard Inlet Air Opening, Code 160A (does not accommodate dampers)

Code 141 - Motor Support for less than 1 HP motor

Code 146 - Replacement Rubber Feet and Hardware

Code 151 - Belt Guard

Code 142 - Motor Adjustment Bracket Assy for less than 1HP motor

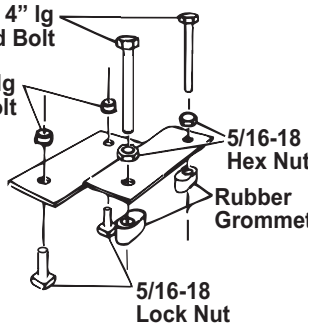

Codes 143, 144, and 145 - Motor Mounting Plate Assy for motors 1HP and larger

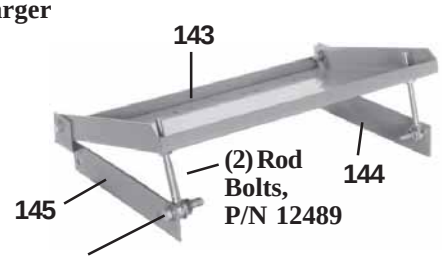

(2) Bolt, P/N 16248; (2) Washers, P/N 1087; and (2) Nuts, P/N 6554

Code 152 - Blower Guard

Code	Description	Application	Size					
			125	150/175	200/225	250/300	350	400
140	Blower Back Assembly	SCB & SCE	193985	194053	194092	193987	194061	194062
141	Blower Motor Mounting Bracket	SCB & SCE with less than 1HP mtr	44409	44410		44409	44410	
142	Motor Adjustment Bracket Assy		44411					
143	Blower Motor Mountng Plate	SCB & SCE with 1HP & larger motor	194117	12579		194117	12579	
144	Blower Mtr Mountng Plate Left Support		12576					
145	Blower Mtr Mountng Plate Right Support		12577					
146	Rubber Feet and Mounting Hardware	SCB & SCE	64940					
147	Blower, Complete painted blower with Shaft and Bearings	Models SCB and SCE	**1357**, Lau A10-10A	**36429**, Lau A12-12AC-EXT-P		--	--	--
	Blower, Right Side less shaft and bearings		--	--	--	**36430**, Lau RH 2A10-10A	**36432**, Lau RH 2A12-12A	
	Blower, Left Side less shaft and bearings		--	--	--	**36431**, Lau LH 2A10-10A	**36433**, Lau LH 2A12-12A	
148	Blower Shaft		**11302**, 18x3/4	**11303**, 19x1		**10120**, 39-1/4x1	**10121**, 44-5/8x1	
149	Key 3/16" sq x 1-3/3" lg		19361	■	■	■	■	■
150	Blower Bearings		(2) **7310**, Ball SCF-3/4	(2) **10437**, Ball SCR16-1				
151	Belt Guard Assy	SCB only	193796	193797		193796	193797	
152	Blower Inlet Guard		102474	102475				

Blower Cabinet Parts for Model SCE - add to parts on pages 4-5 and 12

(Note: Filter rack and filters illustrated are optional and are *not* included in Code 160A or 160B)

Code 160A - Standard Blower Cabinet for Model SCE beginning 7/84

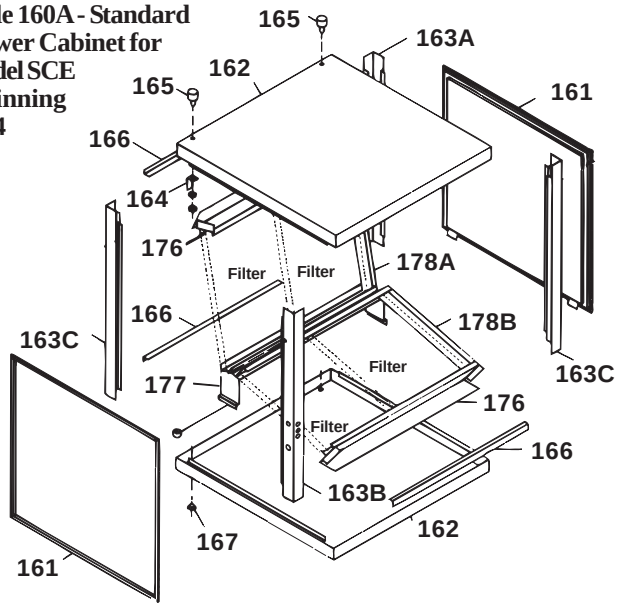

Code 160B - Optional Blower Cabinet that Accommodates Dampers

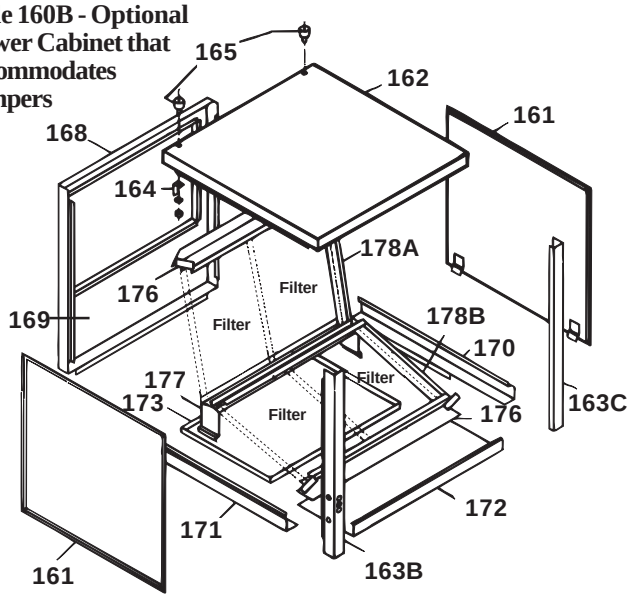

Code	Blower Cabinet Parts - apply to Std and/or Opt cabinet as listed			Size					
				125	150/175	200/225	250/300	350	400
160A	**Standard Cabinet**	Shipped knocked down; assembly is required.		12545	12546	12547	12548	12549	12550
160B	**Optional Cabinet**			84215	84216	84217	84218	84219	84220
Components:			Qty						
161	Door **without** insulation	Std	2	51041		51042			
	Door **with** insulation	Opt	2	84221		84222			
162	Top & Btm **without** insulation	Std	2	11522	11529	11197	11564	11574	11583
	Top **with** insulation	Opt	1	11825	11842	11767	11856	11862	11777
163A	Corner Support	Std	1	11518		11211			
163B		Std & Opt	1	11519		19982			
163C		(2)Std; (1)Opt		11517		11210			
164	Hanger Support	Std & Opt	2	10219					
165	Hanger Assembly	Std & Opt	2	9557					
166	Duct Connecting Angle	Opt	2	11523	11530	11536	11567	11576	11584
167	Hole Plug 1/2"	Std & Opt	2	82413					
168	End Panel only (less insulation)	Opt	1	12075	12411	11540	12414	12029	11589
169	End Panel Insulation	Opt	1	11158	11165	11167	11176	11180	11184
170	Bottom Left Side	Opt	1	11203					
171	Bottom Right Side	Opt	1	11204					
172	Rear Bottom Section	Opt	1	11526	11533	11392	11571	11580	11393
173	Inlet Cap	Opt	1	12513	12514	11538	12515	12516	11587
174	Bottom Insulation	Opt	1	11155	11162	11167	11176	11180	11184
175	Filter Racks (less fltrs; assembly is required)	Filter rack is optional. Fits either Std or Opt cabinet.	1	24501	24503	24505	24507	24509	24511
176	Filter Support		2	19704	19710	19717	19723	19729	19736
177	Intermediate Filter Support Assy		1	19708	19715	19721	19727	19734	19742
178A	Filter Stop		1	■	■	■	■	19733	19740
178B			1	■	■	■	■	■	19741
179	Filters - See Below								
180	Inlet Screen, no dampers (same as Opt AZ3)			109134	109135	109136	109137	109138	109139
	Inlet Screen, w/dampers (same as Opt AZ4)			109146	109147	109148	109149	109150	109151
	Screens for horizontal and bottom openings w/dampers (same as Opt AZ5)			109152	109153	109154	109155	109156	109157

Code 179 - Optional Filters	Size					
	125	150/175	200/225	250/300	350	400
Disposable 16x20x1	■	■	(2)**16445**	■	■	■
Disposable 16x25x1	■	■	(2)**16447**	■	■	(3)**16447**
Disposable 20x20x1	(2)**16448**	■	■	(2)**16448**	(1)**16448**	■
Disposable 20x25x1	■	(2)**16446**	■	(2)**16446**	(3)**16446**	(2)**16446**
Permanent 16x20x1	■	■	(2)**101607**	■	■	■
Permanent 16x25x1	■	■	(2)**101609**	■	■	(3)**101609**
Permanent 20x20x1	(2)**101608**	■	■	(2)**101608**	(1)**101608**	■
Permanent 20x25x1	■	(2)**101610**	■	(2)**16446**	(3)**16446**	(2)**16446**
Permanent 16x20x2	■	■	(2)**101620**	■	■	■
Permanent 16x25x2	■	■	(2)**101622**	■	■	(3)**101622**

Code 179 (cont'd) - Optional Filters	Size					
	125	150/175	200/225	250/300	350	400
Permanent 20x20x2	(2)**101621**	■	■	(2)**101621**	(1)**101621**	■
Permanent 20x25x2	■	(2)**101623**	■	(2)**101623**	(3)**101623**	(2)**101623**
Pleated 16x20x1	■	■	(2)**104105**	■	■	■
Pleated 16x25x1	■	■	(2)**104107**	■	■	(3)**104107**
Pleated 20x20x1	(2)**104106**	■	■	(2)**104106**	(1)**104106**	■
Pleated 20x25x1	■	(2)**104108**	■	(2)**104108**	(3)**104108**	(2)**104108**
Pleated 16x20x2	■	■	(2)**104110**	■	■	■
Pleated 16x25x2	■	■	(2)**104112**	■	■	(3)**104112**
Pleated 20x20x2	(2)**104111**	■	■	(2)**104111**	(1)**104111**	■
Pleated 20x25x2	■	(2)**104113**	■	(2)**104113**	(3)**104113**	(2)**104113**

Model SSCBL Blower Cabinet and Blower Parts

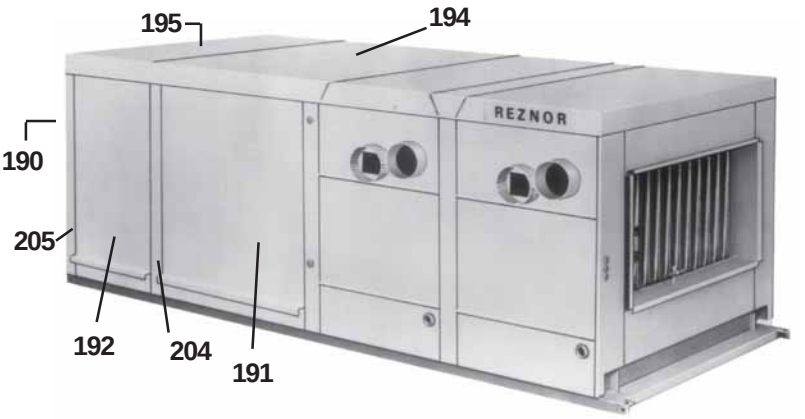

Cross-Reference of End and Bottom Panel Options to Cabinet Openings

Cabinet Option	End Panel Solid	End Panel 100% Open	Btm Panel Solid	Btm Panel 100% Open
Std		X	X	
AR-4	X			X
AR-8	X		X	
AR-9	X		X	
AR-11		X		X
AR-12		X		X
AR-13		X		X
AR-14		X		X
AR-15		X		X
AR-16		X		X
AR-17		X		X
AR-18		X		X
AR-24		X		X

Code	Description	500/600	700/1050	400/800/1200
189	Cabinet Btm - Rt Half - solid (no opening)	106242	106243	106244
	Cabinet Btm - Lft Half - solid (no opening)	106238	106239	106240
	Cabinet Btm - Rt Half - return air opening	105606	105607	106608
	Cabinet Btm - Lft Half - return air opening	104365	104366	104367
190	End Panel Assy - solid (no opening)	103620	103621	103622
	End Panel Assy - solid (no opening) w/double-wall construction (Opt AY3)	105550	105551	103555
	End Panel Assy - 100% opening	103641	103642	103643
	End Panel Assy - 100% opening w/double-wall construction (Opt AY3)	105544	105545	105546
191	Blower Door - standard	(2)100347		
	Blower Door - w/double-wall construction (Opt AY3)	(2)104115		
192	Filter Cabinet Door Assy	(2)106276		
	Filter Cabinet Dr Assy - w/double-wall construction (Opt AY3)	(2)107350		
193	Replacement Door Latch	112974		
194	Blower Cabinet Front Top Section Assy	106280	106281	106282
195	Blower Cabinet Rear Top Section Assy	106286	106287	106288
196	Blower Cabinet Top Insulation Retainer	107350	107351	107352
197	Filter Cabinet Top Insulation Retainer	107354	107355	107356
198	BL Cabinet Leg #1, Left	105603		
199	BL Cabinet Leg #2, Right	105604		
200	Corner Post	(2)114761		
201	Cabinet Leg Cap Left	100069		
202	Cabinet Leg Cap Right	100071		
203	Cabinet Intermediate Post	(2)114762		
204	Cabinet Intermediate Post Cap	(2)104372		
205	Corner Post Cap	(2)100072		
206	Cabinet Top Front Panel	105610	105611	105612
207	Cabinet Bottom Front Panel	105614	105615	105616
208	Cabinet Vertical Blower Support Left	106299		
209	Cabinet Vertical Blower Support Right	106943		
210	Cabinet Horizontal Blower Support	(2)31576		
211	Cabinet and Panel Support	100078	100079	100080
212	Cabinet Top Support	105600	105601	105602
213	Bottom Filter Rack Assy - 1 & 2" fltrs	114711	114712	114713
214	Rear Filter Rack Assy - 1 & 2" fltrs	(2) 114707	(2) 114708	(2) 114709
215	Front Filter Rack Assy - 1 & 2" fltrs	(2) 114695	(2) 114696	(2) 114697
216	Top Filter Rack Assy - 1 & 2" fltrs	114719	114720	114721
217	Top Door Seal	(2)95487		
218	Blower Cabinet Adapter Back Assy	163833	163834	148429
219	Motor Mounting Plate Assy	106295		
220	Motor Mounting Bolts	See illustration, pg 15.		

Code	Description		500/600	700/1050	400/800/1200
221	Motor Mounting Support Assy (support rails for motor mounting plate, Code 219)	< 15HP motor	(2)106698		
		<15HP w/ (Opt PC12) vibration isolation	149008 (qty changes to one because assembly includes both rails)		
		15 & 20 HP			
222A	Mtr Adjustment Angle (w/ Code 222B & 222C allows motor to be moved for drive adjustment)	< 15HP motor	105633		
		<15HP w/ (Opt PC12) vibration isolation	149010		
		15 & 20 HP	149010		
222B	Motor Adjustment Bolt 3/8 - 16 x 7" lg		106275 (used with 222A & C)		
222C	Adjustment Bolt Hex Nut 3/8 - 16		1438 (used with 222A & B)		
223	Blower (Housing and Wheel) Lau 15 x 9, 1-3/16		(2) 106296	--	--
224	Blower (Housing and Wheel) Lau 15 x 11, 1-3/16		--	(2)14469	
225	Blower Shaft 1-3/16 x 37" long		106297	--	--
	Blower Shaft 1-3/16 x 42-1/2" long		--	106298	--
	Blower Shaft 1-3/16 x 48" long		--	--	13589
226	Blower Bearing, 1-3/16", less than 5HP		(2) 14474, Fafair #E8317		
227	Vertical Blower Support - Right		106943		
228	Vertical Blower Support - Left		106299		
229	Bearing Bracket, 1-3/16		(2) 24233, Lau #014431-02		
230	Heavy Duty Blower Right Lau 15 x 9 (15-20HP motors)		106935	--	--
231	Heavy Duty Blower Left Lau 15 x 9 (15-20HP motors)		106936	--	--
232	Heavy Duty Blower Right Lau 15 x 11 (15-20HP motors)		--	106937	
233	Heavy Duty Blower Left Lau 15 x 11 (15-20HP motors)		--	106938	
234	Blower Shaft Key (used with heavy duty blowers)		(4) 134638		
235	Blower Shaft Heavy Duty Blower 1-7/16 x 42" long		106939	--	--
	Blower Shaft Heavy Duty Blower 1-7/16 x 47-1/2" long		--	106940	--
	Blower Shaft Heavy Duty Blower 1-7/16 x 53" long		--	--	106941
236	Pillow Block Bearing, 1-7/16 Bore, Dodge P2BS2107R		(2) 170108 (replaces P/N 106942)		
237	Class II Blower Support - Right Side		149520		
238	Class II Blower Support - Left Side		149521		
239	Air Flow Switch Pitot Sense Probe (part of Option BW1)		111733		

CODE 193 - Replacement Door Latch Kit, P/N 112974

Assembly sequence for installing replacement door latch.

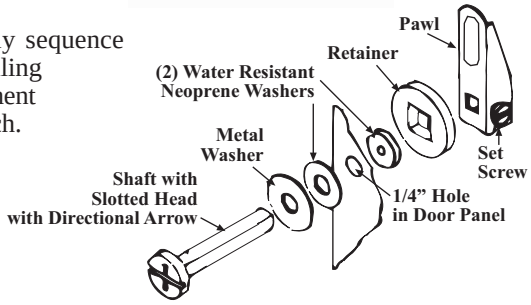

Parts for Motor Support, Mounting, and Adjusting

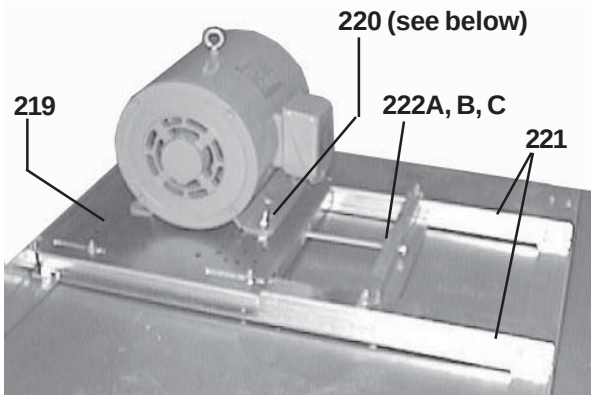

Blower, Bearing Support, and Motor on unit with up to a 5 HP Motor

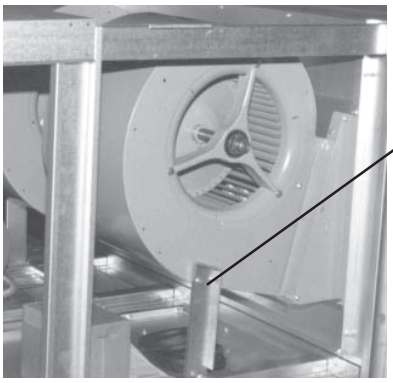

Code 220 - Motor Mounting Bolts

3/8" Bolt

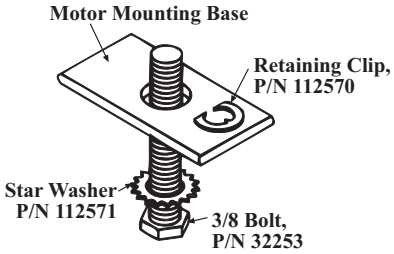

5/16" Bolt

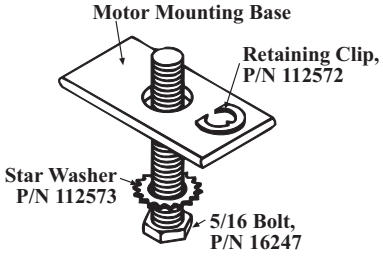

Blower Triangular Bearing Mounting for SSCBL with a 7-1/2 or 10 HP Motor

Description	P/N
Left Bearing Support Assy	**112971**
Right Bearing Support Assy	**112972**
Pillowblock Bearing Sealmaster 1/16"	(2) **112973**
90° Grease Fitting	**195834**
1/2-13 x 2" Cap Screw GR-8	(4) **111304**
1/2-13 Nut GR-8	(4) **111305**
1/2 Lockwasher	(4) **111306**
1/4-20 Cap Screws	(6) **16246**
1/4-20 Lock Nut	(6) **10650**

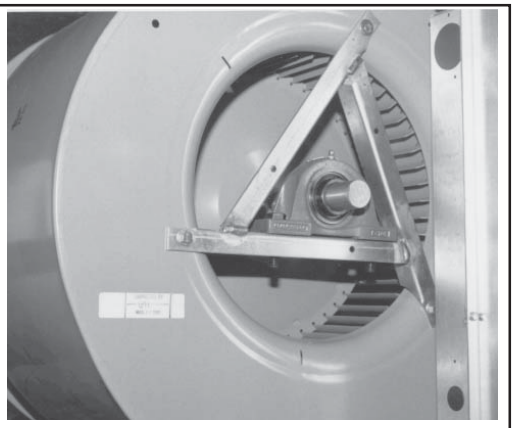

Blower and Bearing on a unit with a 15 and 20 HP Motor (See CODES 230-238)

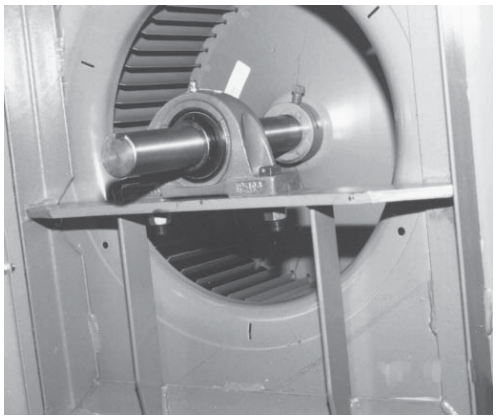

Location of Optional Air Flow Switch Sensor, CODE 239

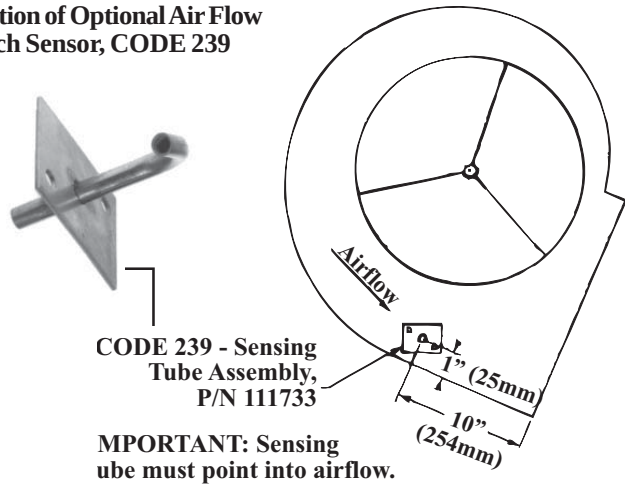

MPORTANT: Sensing ube must point into airflow.

Replacement Filters/Blockoff Plates - Models SSCBL and SSCDBL

For filter rack parts, see Codes 213-216 on page 14.

SSCBL 400, 800, 1200; SSCDBL 800, 1600 (2 sets)

Filter Arrangements for 1" or 2" Disposable Filters (Options AW2 and AW7)

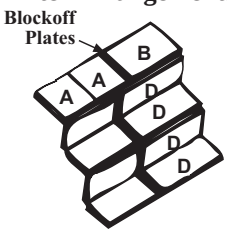

A	16 x16
B	16 x 25
C	12 x 25
D	12 x 30

Blockoff Plates: (1) **106334**; (4) **114337**

Filter Arrangements for 1" or 2" Disposable Pleated Filters (Options AW10 and AW11)

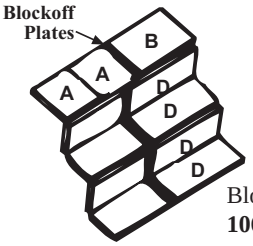

A	16 x16
B	16 x 25
C	12 x 25
D	12 x 32

Blockoff Plates: (1) **106334**; (4) **114335**

Filter Arrangements for 1" or 2" Permanent Filters (Options AW8 and AW9)

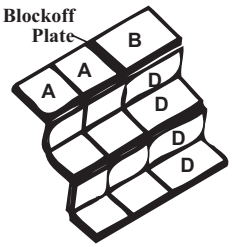

A	16 x16
B	16 x 25
C	12 x 16
D	12 x 26

Blockoff Plates: (1) **106334**

SSCBL 500,600; SSCDBL 1000, 1200 (2 sets)

Filter Arrangements for 1" or 2" Disposable Filters (Options AW2 and AW7)

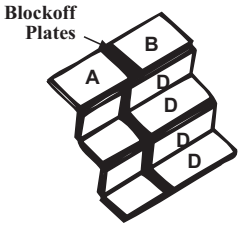

A	16 x 20
B	16 x 25
C	12 x 20
D	12 x 25

Blockoff Plates: (1) **106332**; (4) **114338**

Filter Arrangements for 1" or 2" Disposable Pleated Filters (Options AW10 and AW11)

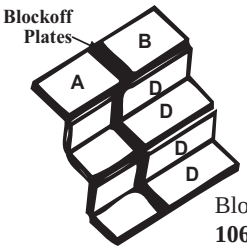

A	16 x 20
B	16 x 25
C	12 x 20
D	12 x 25

Blockoff Plates: (1) **106332**; (4) **114337**

Filter Arrangements for 1" or 2" Permanent Filters (Options AW8 and AW9)

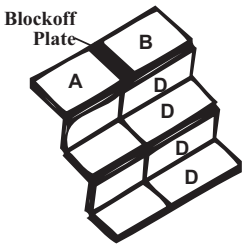

A	16 x 20
B	16 x 25
C	12 x 20
D	12 x 26

Blockoff Plates: (1) **106334**

SSCBL 700,1050; SSCDBL 1400 (2 sets)

Filter Arrangements for 1" or 2" Disposable Filters (Options AW2 and AW7)

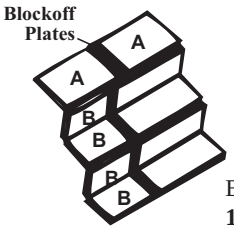

A	16 x 25
B	12 x 20
C	12 x 30

Blockoff Plates: (1) **106332**; (4) **114336**

Filter Arrangements for 1" or 2" Disposable Pleated Filters (Options AW10 and AW11)

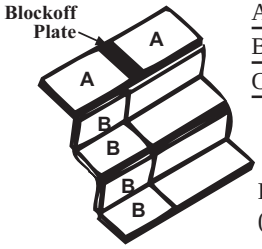

A	16 x 25
B	12 x 20
C	12 x 32

Blockoff Plates: (1) **106333**

Filter Arrangements for 1" or 2" Permanent Filters (Options AW8 and AW9)

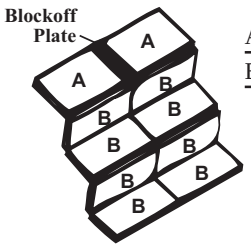

A	16 x 25
B	12 x 26

Blockoff Plates: (1) **106332**

Filter Type	Qty	Size	1" Filter	2" Filter	Qty	Size	1" Filter	2" Filter	Qty	Size	1" Filter	2" Filter
	SSCBL 400, 800, 1200				SSCBL 500, 600				SSCBL 700, 1050			
Disposable 1" or 2"	2	16 x 16	66596	104101	1	16 x 25	16447	104099	2	16 x 25	16447	104099
	1	16 x 25	16447	104099	1	16 x 20	16445	104097	4	12 x 30	114328	114323
	4	12 x 25	114327	114318	4	12 x 20	114326	114317	4	12 x 20	114326	114317
	4	12 x 30	114328	114323	4	12 x 25	114327	114318				
Permanent 1" or 2"	2	16 x 16	104102	104103	1	16 x 20	101607	101620	2	16 x 25	101609	101622
	8	12 x 16	114334	114325	4	12 x 20	114332	114321	8	12 x 26	114333	114322
	1	16 x 25	101609	101622	1	16 x 25	101609	101622				
	4	12 x 26	114333	114322	4	12 x 26	114333	114322				
Pleated 1" or 2"	2	16 x 16	104104	104109	1	16 x 20	104105	104110	2	16 x 25	104107	104112
	4	12 x 25	114330	114320	1	16 x 25	104107	104112	4	12 x 32	114331	104324
	1	16 x 25	104107	104112	4	12 x 20	114329	114319	4	12 x 20	114329	114319
	4	12 x 32	114331	114324	4	12 x 25	114330	114320				
	SSCDBL 800, 1600				SSCDBL 1000, 1200				SSCDBL 1400			
Disposable 1" or 2"	4	16 x 16	66596	104101	2	16 x 25	16447	104099	4	16 x 25	16447	104099
	2	16 x 25	16447	104099	2	16 x 20	16445	104097	8	12 x 30	114328	114323
	8	12 x 25	114327	114318	8	12 x 20	114326	114317	8	12 x 20	114326	114317
	8	12 x 30	114328	114323	8	12 x 25	114327	114318				
Permanent 1" or 2"	4	16 x 16	104102	104103	2	16 x 20	101607	101620	4	16 x 25	101609	101622
	16	12 x 16	114334	114325	8	12 x 20	114332	114321	16	12 x 26	114333	114322
	2	16 x 25	101609	101622	2	16 x 25	101609	101622				
	8	12 x 26	114333	114322	8	12 x 26	114333	114322				
Pleated 1" or 2"	2	16 x 16	104104	104109	2	16 x 20	104105	104110	4	16 x 25	104107	104112
	8	12 x 25	114330	114320	2	16 x 25	104107	104112	8	12 x 32	114331	104324
	2	16 x 25	104107	104112	8	12 x 20	114329	114319	8	12 x 20	114329	114319
	8	12 x 32	114331	114324	8	12 x 25	114330	114320				

Replacement Blower Motors and Starters

Replacement Motors (Tables on pages 17 - 22)

Motors that are highlighted in gray **do not** have internal overload protection and must be used with the motor starter and overload listed. See CODE 333, page 27, for standard motor contactor for motors with internal overloads.

Replacement IEC Starters and Overloads (listed by motor)

When ordering a replacement IEC starter (contactor) or overload, check the manufacturer's number on both parts. If the number is different than that listed, both components must be replaced. IEC Starter (contactor) and overload are mounted on rail, **P/N 111387.** Replacement holding coils are listed on page 22.

If the motor has a NEMA starter, see the replacement parts on page 23.

Model SCB - Replacement Blower Motors and 24V Motor Starters

Motor									Service	Power	Eff.	Reznor	Starter (24V)	Reznor	Overload	o.l.	o.l.
Type	HP	P/N	Mfr No.	Frame	fla	Shaft	volt	ph	Factor	Factor	%	P/N		P/N	GE #	min	max
OPEN	1/4	**210611**	AO-BF2024	48/56	4.6	1/2"	115	1	1.35			**151275**	CL00A310T-1	**151191**	RTA1-L	4.00	6.30
OPEN	1/4	**210611**	AO-BF2024	48/56	2.3	1/2"	208	1	1.35			**151275**	CL00A310T-1	**151189**	RTA1-J	1.80	2.70
OPEN	1/4	**210611**	AO-BF2024	48/56	2.3	1/2"	240	1	1.35			**151275**	CL00A310T-1	**151189**	RTA1-J	1.80	2.70
OPEN	1/4	**115864**	AO-H200	K48	1.1	1/2"	208	3	1.35	72	74	**151275**	CL00A310T-1	**151187**	RTA1-G	1.00	1.50
OPEN	1/4	**115864**	AO-H200	K48	1.4	1/2"	240	3	1.35	72	74	**151275**	CL00A310T-1	**151187**	RTA1-G	1.00	1.50
OPEN	1/4	**115864**	AO-H200	K48	0.75	1/2"	480	3	1.35	72	81	**151275**	CL00A310T-1	**151186**	RTA1-F	0.65	1.10
OPEN	1/3	**202091**	AO-BF2034	48/56	6.0	1/2"	115	1	1.35			**151275**	CL00A310T-1	**151191**	RTA1-L	4.00	6.30
OPEN	1/3	**202091**	AO-BF2034	48/56	3.0	1/2"	208	1	1.35			**151275**	CL00A310T-1	**151190**	RTA1-K	2.50	4.10
OPEN	1/3	**115863**	AO-H260	K48	1.4	1/2"	208	3	1.35			**151275**	CL00A310T-1	**151187**	RTA1-G	1.00	1.50
OPEN	1/3	**115863**	AO-H260	K48	1.6	1/2"	240	3	1.35			**151275**	CL00A310T-1	**151188**	RTA1-H	1.30	1.90
OPEN	1/3	**115863**	AO-H260	K48	0.8	1/2"	480	3	1.35			**151275**	CL00A310T-1	**151186**	RTA1-F	0.65	1.10
OPEN	1/2	**102627**	AO-BF2054	56Z	8.8	5/8"	120	1	1.15			**151275**	CL00A310T-1	**151193**	RTA1-N	8.00	12.00
OPEN	1/2	**102627**	AO-BF2054	56Z	5.1	5/8"	208	1	1.15			**151275**	CL00A310T-1	**151191**	RTA1-L	4.00	6.30
OPEN	1/2	**102627**	AO-BF2054	56Z	4.4	5/8"	240	1	1.15			**151275**	CL00A310T-1	**151191**	RTA1-L	4.00	6.30
OPEN	1/2	**159183**	AO-H880	LA56	2.5	5/8"	208	3	1.25			**151275**	CL00A310T-1	**151189**	RTA1-J	1.80	2.70
OPEN	1/2	**159183**	AO-H880	LA56	3.0	5/8"	240	3	1.25			**151275**	CL00A310T-1	**151190**	RTA1-K	2.50	4.10
OPEN	1/2	**159183**	AO-H880	LA56	1.5	5/8"	480	3	1.25			**151275**	CL00A310T-1	**151188**	RTA1-H	1.30	1.90
OPEN	3/4	**93548**	AO-312P629	B56	11.0	5/8"	120	1	1.25			**151276**	CL01A310T-1	**151194**	RTA1-P	10.00	16.00
OPEN	3/4	**93548**	AO-312P629	B56	6.3	5/8"	208	1	1.25			**151275**	CL00A310T-1	**151192**	RTA1-M	5.50	8.50
OPEN	3/4	**93548**	AO-312P629	B56	5.5	5/8"	240	1	1.25			**151275**	CL00A310T-1	**151191**	RTA1-L	4.00	6.30
OPEN	3/4	**36951**	AO-312P696	D56	2.9	5/8"	208	3	1.25			**151275**	CL00A310T-1	**151190**	RTA1-K	2.50	4.10
OPEN	3/4	**36951**	AO-312P696	D56	2.6	5/8"	240	3	1.25			**151275**	CL00A310T-1	**151190**	RTA1-K	2.50	4.10
OPEN	3/4	**36951**	AO-312P696	D56	1.3	5/8"	480	3	1.25			**151275**	CL00A310T-1	**151187**	RTA1-G	1.00	1.50
OPEN	1	**13685**	AO-C523	H56	13.0	5/8"	120	1	1.25			**151276**	CL01A310T-1	**151194**	RTA1-P	10.00	16.00
OPEN	1	**13685**	AO-C523	H56	7.5	5/8"	208	1	1.25			**151275**	CL00A310T-1	**151192**	RTA1-M	5.50	8.50
OPEN	1	**13685**	AO-C523	H56	6.5	5/8"	240	1	1.25			**151275**	CL00A310T-1	**151192**	RTA1-M	5.50	8.50
OPEN	1	**36580**	AO-H882	F56	3.7	5/8"	208	3	1.15		79	**151275**	CL00A310T-1	**151190**	RTA1-K	2.50	4.10
OPEN	1	**36580**	AO-H882	F56	3.2	5/8"	240	3	1.15		79	**151275**	CL00A310T-1	**151190**	RTA1-K	2.50	4.10
OPEN	1	**36580**	AO-H882	F56	1.6	5/8"	480	3	1.15		79	**151275**	CL00A310T-1	**151188**	RTA1-H	1.30	1.90
OPEN	1.5	**194202**	AO-C621	56	15.0	5/8"	120	1	1.2	86.4	77.2	**151276**	CL01A310T-1	**151194**	RTA1-P	10.00	16.00
OPEN	1.5	**194202**	AO-C621	56	7.8	5/8"	208	1	1.2	86.4	77.2	**151275**	CL00A310T-1	**151192**	RTA1-M	5.50	8.50
OPEN	1.5	**194202**	AO-C621	56	7.5	5/8"	240	1	1.2	86.4	77.2	**151275**	CL00A310T-1	**151192**	RTA1-M	5.50	8.50
OPEN	1.5	**115859**	AO-H884	UA56	5.6	5/8"	208	3	1.15	66.4	78.6	**151275**	CL00A310T-1	**151191**	RTA1-L	4.00	6.30
OPEN	1.5	**115859**	AO-H884	UA56	5.0	5/8"	240	3	1.15	66.4	78.6	**151275**	CL00A310T-1	**151191**	RTA1-L	4.00	6.30
OPEN	1.5	**115859**	AO-H884	UA56	2.8	5/8"	480	3	1.15	66.4	78.6	**151275**	CL00A310T-1	**151190**	RTA1-K	2.50	4.10
OPEN	2	**202581**	AO-RB1204A	56H	24.6	5/8"	120	1				**151279**	CL04A310M-1	**151198**	RTA1-U	21.00	26.00
OPEN	2	**202581**	AO-RB1204A	56H	12.3	5/8"	208	1				**151276**	CL01A310T-1	**151194**	RTA1-P	10.00	16.00
OPEN	2	**202581**	AO-RB1204A	56H	12.3	5/8"	240	1				**151276**	CL01A310T-1	**151194**	RTA1-P	10.00	16.00
OPEN	2	**159327**	AO-H886	56HZ	7.0	7/8"	208	3	1.15	67	79	**151275**	CL00A310T-1	**151192**	RTA1-M	5.50	8.50
OPEN	2	**159327**	AO-H886	56HZ	6.6	7/8"	240	3	1.15	67	79	**151275**	CL00A310T-1	**151192**	RTA1-M	5.50	8.50
OPEN	2	**159327**	AO-H886	56HZ	3.5	7/8"	480	3	1.15	67	79	**151275**	CL00A310T-1	**151190**	RTA1-K	2.50	4.10
OPEN	3	**111560**	AO-B735	L56	13.7	5/8"	208	1	1.15			**151276**	CL01A310T-1	**151194**	RTA1-P	10.00	16.00
OPEN	3	**111560**	AO-B735	L56	12.4	5/8"	230	1	1.15			**151276**	CL01A310T-1	**151194**	RTA1-P	10.00	16.00
OPEN	3	**159185**	AO-H845	P56HZ	9.0	7/8"	208	3	1.15			**151275**	CL00A310T-1	**151193**	RTA1-N	8.00	12.00
OPEN	3	**159185**	AO-H845	P56HZ	8.6	7/8"	240	3	1.15			**151275**	CL00A310T-1	**151193**	RTA1-N	8.00	12.00
OPEN	3	**159185**	AO-H845	P56HZ	4.3	7/8"	480	3	1.15			**151275**	CL00A310T-1	**151191**	RTA1-L	4.00	6.30
TEFC	1/4	**105566**	AO-STK904	M48	3.6	1/2"	120	1				**151275**	CL00A310T-1	**151190**	RTA1-K	2.50	4.10
TEFC	1/4	**16074**	AO-108152	J56	2.2	5/8"	208	1				**151275**	CL00A310T-1	**151189**	RTA1-J	1.80	2.70
TEFC	1/4	**16074**	AO-108152	J56	1.9	5/8"	240	1				**151275**	CL00A310T-1	**151189**	RTA1-J	1.80	2.70
TEFC	1/4	**16075**	AO-125439	B56	1.6	5/8"	208	3				**151275**	CL00A310T-1	**151188**	RTA1-H	1.30	1.90
TEFC	1/4	**16075**	AO-125439	0	1.4	5/8"	240	3				**151275**	CL00A310T-1	**151188**	RTA1-H	1.30	1.90
TEFC	1/4	**16075**	AO-125439	B56	0.7	5/8"	480	3				**151275**	CL00A310T-1	**151186**	RTA1-F	0.65	1.10

Replacement Blower Motors and Starters (cont'd)

Model SCB - Replacement Blower Motors and 24V Motor Starters (cont'd) - See instructions on page 17.

Motor									Service	Power	Eff.	Reznor	Starter	Reznor	Overload	o.l.	o.l.
Type	HP	P/N	Mfr No.	Frame	fla	Shaft	volt	ph	Factor	Factor	%	P/N		P/N	GE#	min	max
TEFC	1/3	**115861**	AO-STK906	N48	4.6	1/2"	120	1				**151275**	CL00A310T-1	**151191**	RTA1-L	4.00	6.30
TEFC	1/3	**159501**	AO-C151	N48	2.3	1/2"	208	1				**151275**	CL00A310T-1	**151189**	RTA1-J	1.80	2.70
TEFC	1/3	**159501**	AO-C151	N48	2.4	1/2"	240	1				**151275**	CL00A310T-1	**151189**	RTA1-J	1.80	2.70
TEFC	1/3	**105567**	AO-H261	L48	1.2	1/2"	208	3				**151275**	CL00A310T-1	**151187**	RTA1-G	1.00	1.50
TEFC	1/3	**105567**	AO-H261	L48	1.2	1/2"	240	3				**151275**	CL00A310T-1	**151187**	RTA1-G	1.00	1.50
TEFC	1/3	**105567**	AO-H261	L48	0.6	1/2"	480	3				**151275**	CL00A310T-1	**151184**	RTA1-D	0.40	0.65
TEFC	1/2	**159184**	AO-C613	J56	7.2	5/8"	120	1				**151275**	CL00A310T-1	**151192**	RTA1-M	5.50	8.50
TEFC	1/2	**159184**	AO-C613	J56	3.5	5/8"	208	1				**151275**	CL00A310T-1	**151190**	RTA1-K	2.50	4.10
TEFC	1/2	**159184**	AO-C613	J56	3.6	5/8"	240	1				**151275**	CL00A310T-1	**151190**	RTA1-K	2.50	4.10
TEFC	1/2	**16077**	AO-H274	H56	2.3	5/8"	208	3	1	59.5	74.8	**151275**	CL00A310T-1	**151189**	RTA1-J	1.80	2.70
TEFC	1/2	**16077**	AO-H274	H56	2.0	5/8"	240	3	1	59.5	74.8	**151275**	CL00A310T-1	**151189**	RTA1-J	1.80	2.70
TEFC	1/2	**16077**	AO-H274	H56	1.0	5/8"	480	3	1	59.5	74.8	**151275**	CL00A310T-1	**151186**	RTA1-F	0.65	1.10
TEFC	3/4	**115860**	AO-F353	F56	11.0	5/8"	120	1				**151276**	CL01A310T-1	**151194**	RTA1-P	10.00	16.00
TEFC	3/4	**115860**	AO-F353	F56	5.4	5/8"	208	1				**151275**	CL00A310T-1	**151191**	RTA1-L	4.00	6.30
TEFC	3/4	**159184**	AO-F353	F56	5.5	5/8"	240	1				**151275**	CL00A310T-1	**151191**	RTA1-L	4.00	6.30
TEFC	3/4	**20371**	AO-H580	KA56	2.0	5/8"	208	3	1	73.5	81.1	**151275**	CL00A310T-1	**151189**	RTA1-J	1.80	2.70
TEFC	3/4	**20371**	AO-H580	KA56	2.2	5/8"	240	3	1	73.5	81.1	**151275**	CL00A310T-1	**151189**	RTA1-J	1.80	2.70
TEFC	3/4	**20371**	AO-H580	KA56	1.1	5/8"	480	3	1	73.5	81.1	**151275**	CL00A310T-1	**151187**	RTA1-G	1.00	1.50
TEFC	1	**174993**	AO-159105	L56	12.0	5/8"	120	1				**151276**	CL01A310T-1	**151194**	RTA1-P	10.00	16.00
TEFC	1	**174993**	AO-159105	L56	6.2	5/8"	208	1				**151275**	CL00A310T-1	**151191**	RTA1-L	4.00	6.30
TEFC	1	**174993**	AO-159105	L56	6.0	5/8"	240	1				**151275**	CL00A310T-1	**151191**	RTA1-L	4.00	6.30
TEFC	1	**16080**	AO-H524	J56	3.3	5/8"	208	3	1	74.4	82	**151275**	CL00A310T-1	**151190**	RTA1-K	2.50	4.10
TEFC	1	**16080**	AO-H524	J56	3.4	5/8"	240	3	1	74.4	82	**151275**	CL00A310T-1	**151190**	RTA1-K	2.50	4.10
TEFC	1	**16080**	AO-H524	J56	1.7	5/8"	480	3	1	74.4	82	**151275**	CL00A310T-1	**151188**	RTA1-H	1.30	1.90
TEFC	1.5	**94347**	AO-311P402	TK56H	16.4	5/8"	120	1				**151277**	CL02A310T-1	**151196**	RTA1-S	14.50	18.00
TEFC	1.5	**94347**	AO-311P402	TK56H	9.5	5/8"	208	1				**151275**	CL00A310T-1	**151193**	RTA1-N	8.00	12.00
TEFC	1.5	**94347**	AO-311P402	TK56H	8.2	5/8"	240	1				**151275**	CL00A310T-1	**151193**	RTA1-N	8.00	12.00
TEFC	1.5	**101286**	AO-H535	L56H	4.3	5/8"	208	3	1	80.9	82.4	**151275**	CL00A310T-1	**151191**	RTA1-L	4.00	6.30
TEFC	1.5	**101286**	AO-H535	L56H	4.4	5/8"	240	3	1	80.9	82.4	**151275**	CL00A310T-1	**151191**	RTA1-L	4.00	6.30
TEFC	1.5	**101286**	AO-H535	L56H	2.2	5/8"	480	3	1	80.9	82.4	**151275**	CL00A310T-1	**151189**	RTA1-J	1.80	2.70
TEFC	2	**105572**	AO-K200	F182T	24	1-1/8"	120	1				**151279**	CL04A310M-1	**151198**	RTA1-U	21.00	26.00
TEFC	2	**205881**	L3516TM	56HZ	8.3	7/8"	240	1	1.15	99	78	**151275**	CL00A310T-1	**151192**	RTA1-M	5.50	8.50
TEFC	2	**158165**	AO-E166	145T	7.0	7/8"	208	3				**151275**	CL00A310T-1	**151192**	RTA1-M	5.50	8.50
TEFC	2	**158165**	AO-E166	145T	5.8	7/8"	240	3				**151275**	CL00A310T-1	**151191**	RTA1-L	4.00	6.30
TEFC	2	**158165**	AO-E166	145T	2.9	7/8"	480	3				**151275**	CL00A310T-1	**151190**	RTA1-K	2.50	4.10
TEFC	3	**111564**	AO-K222	F184T	30.0	1-1/8"	120	1				**151279**	CL04A310M-1	**151199**	RTA1-V	25.00	32.00
TEFC	3	**111564**	AO-K222	F184T	15.0	1-1/8"	240	1				**151277**	CL02A310T-1	**151196**	RTA1-S	14.50	18.00
TEFC	3	**159330**	B - M3559T	145T	7.9	7/8"	208	3				**151275**	CL00A310T-1	**151192**	RTA1-N	5.50	8.50
TEFC	3	**159330**	B - M3559T	145T	7.2	7/8"	240	3				**151275**	CL00A310T-1	**151192**	RTA1-N	5.50	8.50
TEFC	3	**159330**	B - M3559T	145T	3.6	7/8"	480	3				**151275**	CL00A310T-1	**151190**	RTA1-K	2.50	4.10
TEFC	5	**111567**	AO-K223	F184T	20.2	1-1/8"	240	1				**151278**	CL25A310T-1	**151197**	RTA1-T	17.50	22.00
TEFC	5	**155048**	AO-E241	184T	16	1-1/8"	208	3				**151277**	CL02A310T-1	**151196**	RTA1-S	14.50	18.00
TEFC	5	**155048**	AO-E241	184T	12	1-1/8"	240	3				**151276**	CL01A310T-1	**151194**	RTA1-P	10.00	16.00
TEFC	5	**155048**	AO-E241	184T	6	1-1/8"	480	3				**151275**	CL00A310T-1	**151191**	RTA1-L	4.00	6.30

Model SCE, SSCBL, and SSCDBL - Replacement Blower Motors and Line Voltage Motor Starters - See instructions on page 17.

Motor							Service	Power	Eff.	Reznor	Starter	Reznor	Overload	o.l.	o.l.
Type	HP	P/N	Mfr No.	fla	volt	ph	Factor	Factor	%	P/N	(line voltage)	P/N	GE#	min	max
OPEN	1/4	**210611**	BF2024	4.6	120	1	1.35			**151146**	CL00A310T-J	**151191**	RTA1-L	4.00	6.30
OPEN	1/4	**210611**	BF2024	2.3	208	1	1.15	63	59	**151150**	CL00A310T-L	**151189**	RTA1-J	1.90	2.70
OPEN	1/4	**210611**	BF2024	2.3	240	1	1.15	63	59	**151147**	CL00A310T-S	**151189**	RTA1-J	1.90	2.70
OPEN	1/4	**115864**	H200	1.1	208	3	1.35	72	74	**151150**	CL00A310T-L	**151187**	RTA1-G	1.00	1.50
OPEN	1/4	**115864**	H200	1.4	240	3	1.35	72	74	**151147**	CL00A310T-S	**151187**	RTA1-G	1.00	1.50
OPEN	1/4	**115864**	H200	0.75	480	3	1.35	72	81	**151148**	CL00A310T-U	**151186**	RTA1-F	0.65	1.10
OPEN	1/3	**202091**	BF2034	6	120	1	1.35			**151146**	CL00A310T-J	**151191**	RTA1-L	4.00	6.30
OPEN	1/3	**202091**	BF2034	3	208	1	1.35	62.8	61.3	**151150**	CL00A310T-L	**151190**	RTA1-K	2.50	4.10
OPEN	1/3	**202091**	BF2034	3	240	1	1.35	62.8	61.3	**151147**	CL00A310T-S	**151190**	RTA1-K	2.50	4.10
OPEN	1/3	**115863**	H260	1.4	208	3	1.35			**151150**	CL00A310T-L	**151187**	RTA1-G	1.00	1.50
OPEN	1/3	**115863**	H260	1.6	240	3	1.35			**151147**	CL00A310T-S	**151188**	RTA1-H	1.30	1.90
OPEN	1/3	**115863**	H260	0.8	480	3	1.35			**151148**	CL00A310T-U	**151186**	RTA1-F	0.65	1.10
OPEN	1/2	**102627**	BF2054	8.8	120	1	1.15			**151146**	CL00A310T-J	**151193**	RTA1-N	8.00	12.00
OPEN	1/2	**102627**	BF2054	5.1	208	1	1.15			**151150**	CL00A310T-L	**151191**	RTA1-L	4.00	6.30
OPEN	1/2	**102627**	BF2054	4.4	240	1	1.15			**151147**	CL00A310T-S	**151191**	RTA1-L	4.00	6.30

Replacement Blower Motors and Starters (cont'd)

Model SCE, SSCBL, and SSCDBL - Replacement Blower Motors and Line Voltage Motor Starters (cont'd)

Motor							Service	Power	Eff.	Reznor	Starter	Reznor	Overload	o.l.	o.l.
Type	HP	P/N	Mfr No.	fla	volt	ph	Factor	Factor	%	P/N	(line voltage)	P/N	GE #	min	max
OPEN	1/2	**159183**	H880	2.5	208	3	1.25			**151150**	CL00A310T-L	**151189**	RTA1-J	1.90	2.70
OPEN	1/2	**159183**	H880	3	240	3	1.25			**151147**	CL00A310T-S	**151190**	RTA1-K	2.50	4.10
OPEN	1/2	**159183**	H880	1.5	480	3	1.25			**151148**	CL00A310T-U	**151188**	RTA1-H	1.30	1.90
OPEN	1/2	**202089**	AOS - H991		575	3				Contact distributor or factory service for replacement P/N's.					
OPEN	3/4	**93548**	312P629	11	120	1	1.25			**151151**	CL01A310T-J	**151194**	RTA1-P	10.00	16.00
OPEN	3/4	**93548**	312P629	6.3	208	1	1.25			**151150**	CL00A310T-L	**151192**	RTA1-M	5.50	8.50
OPEN	3/4	**93548**	312P629	5.5	240	1	1.25			**151147**	CL00A310T-S	**151191**	RTA1-L	4.00	6.30
OPEN	3/4	**36951**	312P696	2.9	208	3	1.25			**151150**	CL00A310T-L	**151190**	RTA1-K	2.50	4.10
OPEN	3/4	**36951**	312P696	2.6	240	3	1.25			**151147**	CL00A310T-S	**151190**	RTA1-K	2.50	4.10
OPEN	3/4	**36951**	312P696	1.3	480	3	1.25			**151148**	CL00A310T-U	**151187**	RTA1-G	1.00	1.50
OPEN	3/4	**202090**	AOS - H992		575	3				Contact distributor or factory service for replacement P/N's.					
OPEN	1	**13685**	C523	13	120	1	1.25			**151151**	CL01A310T-J	**151194**	RTA1-P	10.00	16.00
OPEN	1	**13685**	C523	7.5	208	1	1.25			**151150**	CL00A310T-L	**151192**	RTA1-M	5.50	8.50
OPEN	1	**13685**	C523	6.5	240	1	1.25			**151147**	CL00A310T-S	**151192**	RTA1-M	5.50	8.50
OPEN	1	**36580**	H882	3.7	208	3	1.15		79	**151150**	CL00A310T-L	**151190**	RTA1-K	2.50	4.10
OPEN	1	**36580**	H882	3.2	240	3	1.15		79	**151147**	CL00A310T-S	**151190**	RTA1-K	2.50	4.10
OPEN	1	**36580**	H882	1.6	480	3	1.15		79	**151148**	CL00A310T-U	**151188**	RTA1-H	1.30	1.90
OPEN	1	**158175**	E1006	1.1	575	3	1.15		82.5	**151149**	CL00A310T-Y	**151187**	RTA1-G	1.00	1.50
OPEN	1.5	**194202**	C621	15	120	1	1.2	86.4	77.2	**151156**	CL02A310T-J	**151194**	RTA1-P	10.00	16.00
OPEN	1.5	**194202**	C621	7.8	208	1	1.2	86.4	77.2	**151150**	CL00A310T-L	**151192**	RTA1-M	5.50	8.50
OPEN	1.5	**194202**	C621	7.5	240	1	1.2	86.4	77.2	**151147**	CL00A310T-S	**151192**	RTA1-M	5.50	8.50
OPEN	1.5	**115859**	H884	5.6	208	3	1.15	66.4	78.6	**151150**	CL00A310T-L	**151191**	RTA1-L	4.00	6.30
OPEN	1.5	**115859**	H884	5	240	3	1.15	66.4	78.6	**151147**	CL00A310T-S	**151191**	RTA1-L	4.00	6.30
OPEN	1.5	**115859**	H884	2.8	480	3	1.15	66.4	78.6	**151148**	CL00A310T-U	**151190**	RTA1-K	2.50	4.10
OPEN	1.5	**158162**	E1007	1.6	575	3	1.15	85.3	86.3	**151149**	CL00A310T-Y	**151188**	RTA1-H	1.30	1.90
OPEN	2	**202581**	V102	20.4	120	1	1.15	81.8	77.5	**151160**	CL25A310T-J	**151197**	RTA1-T	17.50	22.00
OPEN	2	**202581**	V102	10	208	1	1.15	81.8	77.5	**151155**	CL01A310T-L	**151193**	RTA1-N	8.00	12.00
OPEN	2	**202581**	V102	10.2	240	1	1.15	81.8	77.5	**151152**	CL01A310T-S	**151193**	RTA1-N	8.00	12.00
OPEN	2	**159327**	H886	7	208	3	1.15	67	79	**151150**	CL00A310T-L	**151192**	RTA1-M	5.50	8.50
OPEN	2	**159327**	H886	6.6	240	3	1.15	67	79	**151147**	CL00A310T-S	**151192**	RTA1-M	5.50	8.50
OPEN	2	**159327**	H886	3.5	480	3	1.15	67	79	**151148**	CL00A310T-U	**151190**	RTA1-K	2.50	4.10
OPEN	2	**158176**	E1008	2.1	575	3	1.15	86	84.8	**151149**	CL00A310T-Y	**151189**	RTA1-J	1.90	2.70
OPEN	3	**111560**	B735	14	208	1	1.15	94.5	80.3	**151159**	CL02A310T-L	**151194**	RTA1-P	10.00	16.00
OPEN	3	**111560**	B735	12.4	240	1	1.15	94.5	80.3	**151152**	CL01A310T-S	**151194**	RTA1-P	10.00	16.00
OPEN	3	**159185**	H845	9	208	3	1.15			**151150**	CL00A310T-L	**151193**	RTA1-N	8.00	12.00
OPEN	3	**159185**	H845	8.6	240	3	1.15			**151147**	CL00A310T-S	**151193**	RTA1-N	8.00	12.00
OPEN	3	**159185**	H845	4.3	480	3	1.15			**151148**	CL00A310T-U	**151191**	RTA1-L	4.00	6.30
OPEN	3	**120019**	H954	3.6	575	3	1.15	80.3	83.8	**151149**	CL00A310T-Y	**151190**	RTA1-K	2.50	4.10
OPEN	5	**111562**	V211	28	208	1	1.15	79.2	78.9	**151169**	CL04A310M-L	**151199**	RTA1-V	25.00	32.00
OPEN	5	**111562**	V211	26	240	1	1.15	79.2	78.9	**151166**	CL04A310M-S	**151199**	RTA1-V	25.00	32.00
OPEN	5	**113371**	196033	13.4	208	3	1.15	87.2	85	**151155**	CL01A310T-L	**151194**	RTA1-P	10.00	16.00
OPEN	5	**113371**	196033	13.2	240	3	1.15	87.2	85	**151152**	CL01A310T-S	**151194**	RTA1-P	10.00	16.00
OPEN	5	**113371**	196033	6.6	480	3	1.15	87.2	85	**151148**	CL00A310T-U	**151192**	RTA1-M	5.50	8.50
OPEN	5	**120020**	H956	5.4	575	3	1.15	85.9	85.3	**151149**	CL00A310T-Y	**151191**	RTA1-L	4.00	6.30
OPEN	7.5	**105828**	V305	35	208	1	1.15	87	86	**151173**	CL06A311M-L	**151206**	RTA2-E	30.00	43.00
OPEN	7.5	**105828**	V305	32	240	1	1.15	87	86	**151170**	CL45A310M-S	**151199**	RTA1-V	25.00	32.00
OPEN	7.5	**105854**	E302	22.5	208	3	1.15	82.5	88.5	**151164**	CL25A310T-L	**151198**	RTA1-U	21.00	26.00
OPEN	7.5	**105855**	E300	19.4	240	3	1.15	82.5	88.5	**151161**	CL25A310T-S	**151197**	RTA1-T	17.50	22.00
OPEN	7.5	**105855**	E300	9.7	480	3	1.15	82.5	88.5	**151153**	CL01A310T-U	**151193**	RTA1-N	8.00	12.00
OPEN	7.5	**158164**	E324	7.8	575	3	1.15	86.5	88.5	**151149**	CL00A310T-Y	**151192**	RTA1-M	5.50	8.50
OPEN	10	**105830**	V303	42	208	1	1.15	96	84	**151173**	CL06A311M-L	**151206**	RTA2-E	30.00	43.00
OPEN	10	**105830**	V303	38	240	1	1.15	96	84	**151172**	CL06A311M-S	**151206**	RTA2-E	30.00	43.00
OPEN	10	**105857**	E303	31	208	3	1.15	85.5	89.5	**151169**	CL04A310M-L	**151199**	RTA1-V	25.00	32.00
OPEN	10	**105858**	E301	26	240	3	1.15	85.5	89.5	**151166**	CL04A310M-S	**151199**	RTA1-V	25.00	32.00
OPEN	10	**105858**	E301	13	480	3	1.15	85.5	89.5	**151153**	CL01A310T-U	**151194**	RTA1-P	10.00	16.00
OPEN	10	**158163**	E325	10.4	575	3	1.15	81	89.5	**151154**	CL01A310T-Y	**151194**	RTA1-P	10.00	16.00

Replacement Blower Motors and Starters (cont'd) - See instructions on page 17.

Model SCE, SSCBL, and SSCDBL - Replacement Blower Motors and Line Voltage Motor Starters (cont'd)

Motor							Service	Power	Eff.	Reznor	Starter	Reznor	Overload	o.l.	o.l.
Type	HP	P/N	Mfr No.	fla	volt	ph	Factor	Factor	%	P/N	(line voltage)	P/N	GE #	min	max
OPEN	15	**142287**	FM2513T-8	43.1	208	3	1.15	80	87.5	**151173**	CL06A311M-L	**151202**	RTA2-G	42.00	55.00
OPEN	15	**142288**	FM2513T	39	240	3	1.15	80	87.5	**151172**	CL06A311M-S	**151206**	RTA2-E	30.00	43.00
OPEN	15	**142288**	FM2513T	19.5	480	3	1.15	80	87.5	**151162**	CL25A310T-U	**151197**	RTA1-T	17.50	22.00
OPEN	15	**142289**	FM2513T-5	16	575	3	1.15	80	87.5	**151158**	CL02A310T-Y	**151196**	RTA1-S	14.50	18.00
OPEN	20	**142295**	FM2515T-8	58.7	208	3	1.15	80	88.5	**151176**	CL07A311M-L	**151203**	RTA2-H	54.00	65.00
OPEN	20	**142296**	FM2515T	53	240	3	1.15	81	88.5	**151175**	CL07A311M-S	**151202**	RTA2-G	42.00	55.00
OPEN	20	**142296**	FM2515T	26.5	480	3	1.15	81	88.5	**151167**	CL04A310M-U	**151199**	RTA1-V	25.00	32.00
OPEN	20	**142297**	FM2515T-5	21.2	575	3	1.15	80	88.5	**151163**	CL25A310T-Y	**151197**	RTA1-T	17.50	22.00
TEFC	1/4	**105566**	STOCK #904	3.6	120	1	1			**151146**	CL00A310T-J	**151190**	RTA1-K	2.50	4.10
TEFC	1/4	**16074**	108152	2.2	208	1	1.35			**151150**	CL00A310T-L	**151189**	RTA1-J	1.90	2.70
TEFC	1/4	**16074**	108152	1.9	240	1	1.35			**151147**	CL00A310T-S	**151188**	RTA1-H	1.30	1.90
TEFC	1/4	**16075**	125439	1.6	208	3	1	61.9	72.1	**151150**	CL00A310T-L	**151188**	RTA1-H	1.30	1.90
TEFC	1/4	**16075**	125439	1.4	240	3	1	61.9	72.1	**151147**	CL00A310T-S	**151187**	RTA1-G	1.00	1.50
TEFC	1/4	**16075**	125439	0.7	480	3	1	61.9	72.1	**151148**	CL00A310T-U	**151186**	RTA1-F	0.65	1.10
TEFC	1/3	**115861**	STOCK #906	4.6	120	1	1	68.5	72.1	**151146**	CL00A310T-J	**151191**	RTA1-L	4.00	6.30
TEFC	1/3	**159501**	C151	2.3	208	1	1	67.2	69.5	**151150**	CL00A310T-L	**151189**	RTA1-J	1.90	2.70
TEFC	1/3	**159501**	C151	2.4	240	1	1	67.2	69.5	**151147**	CL00A310T-S	**151189**	RTA1-J	1.90	2.70
TEFC	1/3	**105567**	H261	1.2	208	3	1.15		79.5	**151150**	CL00A310T-L	**151187**	RTA1-G	1.00	1.50
TEFC	1/3	**105567**	H261	1.2	240	3	1.15		79.5	**151147**	CL00A310T-S	**151187**	RTA1-G	1.00	1.50
TEFC	1/3	**105567**	H261	0.6	480	3	1.15		79.5	**151148**	CL00A310T-U	**151184**	RTA1-D	0.40	0.65
TEFC	1/2	**159184**	C613	7.2	120	1	1.15			**151146**	CL00A310T-J	**151192**	RTA1-M	5.50	8.50
TEFC	1/2	**159184**	C613	3.5	208	1	1.15			**151150**	CL00A310T-L	**151190**	RTA1-K	2.50	4.10
TEFC	1/2	**159184**	C613	3.6	240	1	1.15			**151147**	CL00A310T-S	**151190**	RTA1-K	2.50	4.10
TEFC	1/2	**16077**	H274	2.3	208	3	1	59.5	74.8	**151150**	CL00A310T-L	**151189**	RTA1-J	1.90	2.70
TEFC	1/2	**16077**	H274	2	240	3	1	59.5	74.8	**151147**	CL00A310T-S	**151189**	RTA1-J	1.90	2.70
TEFC	1/2	**16077**	H274	1	480	3	1	59.5	74.8	**151148**	CL00A310T-U	**151186**	RTA1-F	0.65	1.10
TEFC	1/2	**105568**	H276	0.7	575	3	1.15	76.4	77	**151149**	CL00A310T-Y	**151186**	RTA1-F	0.65	0.90
TEFC	3/4	**115860**	F353	11	120	1	1	66	65.7	**151151**	CL01A310T-J	**151194**	RTA1-P	10.00	16.00
TEFC	3/4	**115860**	F353	5.4	208	1	1	66	65.7	**151150**	CL00A310T-L	**151191**	RTA1-L	4.00	6.30
TEFC	3/4	**115860**	F353	5.5	240	1	1	66	65.7	**151147**	CL00A310T-S	**151191**	RTA1-L	4.00	6.30
TEFC	3/4	**20371**	H580	2	208	3	1	73.5	81.1	**151150**	CL00A310T-L	**151189**	RTA1-J	1.90	2.70
TEFC	3/4	**20371**	H580	2.2	240	3	1	73.5	81.1	**151147**	CL00A310T-S	**151189**	RTA1-J	1.90	2.70
TEFC	3/4	**20371**	H580	1.1	480	3	1	73.5	81.1	**151148**	CL00A310T-U	**151187**	RTA1-G	1.00	1.50
TEFC	3/4	**105569**	H461	0.8	575	3	1.15	78.3	82	**151149**	CL00A310T-Y	**151186**	RTA1-F	0.65	1.10
TEFC	1	**174993**	159105	12	120	1	1.15	74.3	70.6	**151151**	CL01A310T-J	**151194**	RTA1-P	10.00	16.00
TEFC	1	**174993**	159105	6.2	208	1	1.15	74.3	70.6	**151147**	CL00A310T-S	**151192**	RTA1-M	5.50	8.50
TEFC	1	**174993**	159105	6	240	1	1.15	74.3	70.6	**151147**	CL00A310T-S	**151192**	RTA1-M	5.50	8.50
TEFC	1	**16080**	H524	3.3	208	3	1	74.4	80.2	**151150**	CL00A310T-L	**151190**	RTA1-K	2.50	4.10
TEFC	1	**16080**	H524	3.4	240	3	1	74.4	80.2	**151147**	CL00A310T-S	**151190**	RTA1-K	2.50	4.10
TEFC	1	**16080**	H524	1.7	480	3	1	74.4	80.2	**151148**	CL00A310T-U	**151188**	RTA1-H	1.30	1.90
TEFC	1	**105570**	H525	1.4	575	3	1.15	71.6	80.4	**151149**	CL00A310T-Y	**151187**	RTA1-G	1.00	1.50
TEFC	1.5	**94347**	311P402	16.4	120	1				**151156**	CL02A310T-J	**151196**	RTA1-S	14.50	18.00
TEFC	1.5	**94347**	311P402	9.5	208	1				**151150**	CL00A310T-L	**151193**	RTA1-N	8.00	12.00
TEFC	1.5	**94347**	311P402	8.2	240	1				**151147**	CL00A310T-S	**151193**	RTA1-N	8.00	12.00
TEFC	1.5	**101286**	H535	4.3	208	3	1	80.9	82.4	**151150**	CL00A310T-L	**151191**	RTA1-L	4.00	6.30
TEFC	1.5	**101286**	H535	4.4	240	3	1	80.9	82.4	**151147**	CL00A310T-S	**151191**	RTA1-L	4.00	6.30
TEFC	1.5	**101286**	H535	2.2	480	3	1	80.9	82.4	**151148**	CL00A310T-U	**151189**	RTA1-J	1.90	2.70
TEFC	1.5	**105665**	E127	1.6	575	3	1.15	85.7	84	**151149**	CL00A310T-Y	**151188**	RTA1-H	1.30	1.90
TEFC	2	**105572**	K200	24	120	1	1	76.4	75.7	**151165**	CL04A310M-J	**151198**	RTA1-U	21.00	26.00
TEFC	2	**105572**	K200	12	240	1	1	76.4	75.7	**151152**	CL01A310T-S	**151194**	RTA1-P	10.00	16.00
TEFC	2	**158165**	E166	7	208	3	1.15	77.5	84	**151150**	CL00A310T-L	**151192**	RTA1-M	5.50	8.50
TEFC	2	**158165**	E166	5.8	240	3	1.15	77.5	84	**151147**	CL00A310T-S	**151191**	RTA1-L	4.00	6.30
TEFC	2	**158165**	E166	2.9	480	3	1.15	77.5	84	**151148**	CL00A310T-U	**151190**	RTA1-K	2.50	4.10
TEFC	2	**158166**	E169	2.3	575	3	1.15	77.5	84	**151149**	CL00A310T-Y	**151189**	RTA1-J	1.90	2.70
TEFC	3	**111564**	K222	30	120	1	1	88	75.5	**151165**	CL04A310M-J	**151199**	RTA1-V	25.00	32.00
TEFC	3	**111564**	K222	15	240	1	1	88	75.5	**151157**	CL02A310T-S	**151194**	RTA1-P	10.00	16.00
TEFC	3	**159330**	M3559T	7.9	208	3	1.15		85.5	**151150**	CL00A310T-L	**151192**	RTA1-N	5.50	8.50
TEFC	3	**159330**	M3559T	7.2	240	3	1.15		85.5	**151147**	CL00A310T-S	**151192**	RTA1-N	5.50	8.50
TEFC	3	**159330**	M3559T	3.6	480	3	1.15		85.5	**151148**	CL00A310T-U	**151190**	RTA1-K	2.50	4.10

Model SCE, SSCBL, and SSCDBL - Replacement Blower Motors and Line Voltage Motor Starters (cont'd)

Motor							Service	Power	Eff.	Reznor	Starter	Reznor	Overload	o.l.	o.l.
Type	HP	P/N	Mfr No.	fla	volt	ph	Factor	Factor	%	P/N	(line voltage)	P/N	GE #	min	max
TEFC	5	**111567**	K223	20.2	240	1	1	90.8	78.4	**151166**	CL04A310M-S	**151197**	RTA1-T	17.50	22.00
TEFC	5	**155048**	E241	16	208	3	1.15		87.5	**151155**	CL01A310T-L	**151196**	RTA1-S	14.50	18.00
TEFC	5	**155048**	E241	12	240	3	1.15		87.5	**151152**	CL01A310T-S	**151194**	RTA1-P	10.00	16.00
TEFC	5	**155048**	E241	6	480	3	1.15		87.5	**151148**	CL00A310T-U	**151191**	RTA1-L	4.00	6.30
TEFC	5	**158170**	E273	4.8	575	3	1.15	90	87.5	**151149**	CL00A310T-Y	**151191**	RTA1-L	4.00	6.30
TEFC	7.5	**105842**	K305	34	240	1	1	86.5	84.8	**151170**	CL45A310M-S	**151200**	RTA1-W	30.00	40.00
TEFC	7.5	**158171**	E356	24	208	3	1.15	83.1	89.5	**151169**	CL04A310M-L	**151198**	RTA1-U	21.00	26.00
TEFC	7.5	**158171**	E356	19	240	3	1.15	83.1	89.5	**151161**	CL25A310T-S	**151197**	RTA1-T	17.50	22.00
TEFC	7.5	**158171**	E356	9.5	480	3	1.15	83.1	89.5	**151153**	CL01A310T-U	**151193**	RTA1-N	8.00	12.00
TEFC	7.5	**158172**	E364	7.6	575	3	1.15	83.1	89.5	**151149**	CL00A310T-Y	**151192**	RTA1-N	5.50	8.50
TEFC	10	**105846**	K313	39	240	1	1	96.5	89.5	**151172**	CL06A311M-S	**151206**	RTA2-E	30.00	43.00
TEFC	10	**158173**	E357	30	208	3	1.15	85	89.5	**151169**	CL04A310M-L	**151199**	RTA1-V	25.00	32.00
TEFC	10	**158173**	E357	26	240	3	1.15	85	89.5	**151166**	CL04A310M-S	**151198**	RTA1-U	21.00	26.00
TEFC	10	**158173**	E357	13	480	3	1.15	85	89.5	**151153**	CL01A310T-U	**151194**	RTA1-P	10.00	16.00
TEFC	10	**158174**	E365	9.6	575	3	1.15	85	89.5	**151154**	CL01A310T-Y	**151193**	RTA1-N	8.00	12.00
TEFC	15	**142443**	FM2333T	38	240	3	1.15	82	90.2	**151172**	CL06A311M-S	**151206**	RTA2-E	30.00	43.00
TEFC	15	**142443**	FM2333T	19	480	3	1.15	82	90.2	**151162**	CL25A310T-U	**151197**	RTA1-T	17.50	22.00
TEFC	15	**142444**	FM2333T-5	15	575	3	1.15	82	90.2	**151158**	CL02A310T-Y	**151194**	RTA1-P	10.00	16.00
TEFC	20	**142301**	FM2334T	52	240	3	1.15	81	89.5	**151175**	CL07A311M-S	**151202**	RTA2-G	42.00	55.00
TEFC	20	**142301**	FM2334T	26	480	3	1.15	81	89.5	**151167**	CL04A310M-U	**151199**	RTA1-V	25.00	32.00
TEFC	20	**142302**	FM2334T-5	20.6	575	3	1.15	81	89.5	**151163**	CL25A310T-Y	**151197**	RTA1-T	17.50	22.00
EE	1	**105659**	E103	3.1	208	3	1.15	83.5	82.5	**151150**	CL00A310T-L	**151190**	RTA1-K	2.50	4.10
EE	1	**159328**	E1015	2.7	240	3	1.15		85.5	**151147**	CL00A310T-S	**151190**	RTA1-K	2.50	4.10
EE	1	**159328**	E1015	1.35	480	3	1.15		85.5	**151148**	CL00A310T-U	**151187**	RTA1-G	1.00	1.50
EE	1	**158175**	E1006	1.1	575	3	1.15		82.5	**151149**	CL00A310T-Y	**151187**	RTA1-G	1.00	1.50
EE	1 1/2	**105662**	E104	4.5	208	3	1.15	86	84	**151150**	CL00A310T-L	**151191**	RTA1-L	4.00	6.30
EE	1 1/2	**159329**	E1016	4	240	3	1.15		85.5	**151147**	CL00A310T-S	**151190**	RTA1-K	2.50	4.10
EE	1 1/2	**159329**	E1016	2	480	3	1.15		85.5	**151148**	CL00A310T-U	**151189**	RTA1-J	1.90	2.70
EE	1 1/2	**158162**	E1007	1.6	575	3	1.15	85.3	84	**151149**	CL00A310T-Y	**151188**	RTA1-H	1.30	1.90
EE	2	**105664**	E105	6	208	3	1.15	86.8	84	**151150**	CL00A310T-L	**151191**	RTA1-L	4.00	6.30
EE	2	**159027**	E1017	5.8	240	3	1.15		86.5	**151147**	CL00A310T-S	**151191**	RTA1-L	4.00	6.30
EE	2	**159027**	E1017	2.9	480	3	1.15		96.5	**151148**	CL00A310T-U	**151190**	RTA1-K	2.50	4.10
EE	2	**158176**	E1008	2.1	575	3	1.15	86	84	**151149**	CL00A310T-Y	**151189**	RTA1-J	1.90	2.70
EE	3	**159186**	35L405S489G3	8.3	208	3	1.15		87.5	**151150**	CL00A310T-L	**151193**	RTA1-N	8.00	12.00
EE	3	**159028**	B-EM3158T	7.4	240	3			87.5	**151147**	CL00A310T-S	**151192**	RTA1-N	5.50	8.50
EE	3	**159028**	B-EM3158T	3.7	480	3			87.5	**151148**	CL00A310T-U	**151190**	RTA1-K	2.50	4.10
EE	3	**159030**	35L405S709G1	3	575	3	1.15		87.5	**151149**	CL00A310T-Y	**151190**	RTA1-K	2.50	4.10
EE	5	**159029**	E204	13.9	208	3	1.15	89	91	**151159**	CL02A310T-L	**151194**	RTA1-P	10.00	16.00
EE	5	**159029**	E204	11.6	240	3	1.15	89	91	**151157**	CL02A310T-S	**151194**	RTA1-P	10.00	16.00
EE	5	**159029**	E204	5.8	480	3	1.15	89	91	**151148**	CL00A310T-U	**151192**	RTA1-M	5.50	8.50
EE	5	**111602**	M3613T-5	4.8	575	3	1.15		87.5	**151149**	CL00A310T-Y	**151191**	RTA1-L	4.00	6.30
EE	7 1/2	**159331**	E316	22.3	208	3	1.15	82	91.7	**151169**	CL04A310M-L	**151198**	RTA1-U	21.00	26.00
EE	7 1/2	**159332**	E317	19.4	240	3	1.15	82	91.7	**151161**	CL25A310T-S	**151197**	RTA1-T	17.50	22.00
EE	7 1/2	**159332**	E317	9.7	480	3	1.15	82	91.7	**151148**	CL00A310T-U	**151193**	RTA1-N	8.00	12.00
EE	7 1/2	**158164**	E324	7.8	575	3	1.15	81.5	88.5	**151149**	CL00A310T-Y	**151192**	RTA1-N	5.50	8.50
EE	10	**159333**	E318	27.8	208	3	1.15	85.5	91	**151169**	CL04A310M-L	**151199**	RTA1-V	25.00	32.00
EE	10	**159334**	E319	24.2	240	3	1.15	85.5	91	**151166**	CL04A310M-S	**151198**	RTA1-U	21.00	26.00
EE	10	**159334**	E319	12.1	480	3	1.15	85.5	91	**151153**	CL01A310T-U	**151194**	RTA1-P	10.00	16.00
EE	10	**158163**	E325	10.3	575	3	1.15	81	89.5	**151149**	CL00A310T-Y	**151194**	RTA1-P	10.00	16.00
EE	15	**142440**	EFM2513T-8	41.5	208	3	1.15	84	92.4	**151173**	CL06A311M-L	**151206**	RTA2-E	30.00	43.00
EE	15	**142441**	EFM2513T	36	240	1	1.15	84	92.4	**151172**	CL06A311M-S	**151206**	RTA2-E	30.00	43.00
EE	15	**142441**	EFM2513T	18	480	3	1.15	84	92.4	**151162**	CL25A310T-U	**151197**	RTA1-T	17.50	22.00
EE	15	**142289**	EFM2513T-5	14.5	575	3	1.15	84	92.4	**151158**	CL02A310T-Y	**151194**	RTA1-P	10.00	16.00
EE	20	**159187**	E452-F2	57	208	3	1.15	84	93.6	**151176**	CL07A311M-L	**151203**	RTA2-H	54.00	65.00
EE	20	**142299**	EFM2515T	48	240	3	1.15	84	93	**151172**	CL06A311M-S	**151202**	RTA2-G	42.00	55.00
EE	20	**142299**	EFM2515T	24	480	3	1.15	84	93	**151167**	CL04A310M-U	**151198**	RTA1-U	21.00	26.00
EE	20	**142300**	EFM2515T-5	19.2	575	3	1.15	84	93	**151163**	CL25A310T-Y	**151197**	RTA1-T	17.50	22.00

Replacement Blower Motors and Starters (cont'd)

Replacement Holding Coils for IEC Starters							
Voltage	GE#	Reznor P/N	For Use with Contactors Beginning with GE#	Voltage	GE#	Reznor P/N	For Use with Contactors Beginning with GE#
24	LB1A-C	**151280**	CL00; CL01; CL02; CL25	208	LB3A-L	**151288**	CL04; CL45
120	LB1A-J	**151281**	CL00; CL01; CL02; CL25	230	LB3A-S	**151289**	CL04; CL45
208	LB1A-L	**151282**	CL00; CL01; CL02; CL25	460	LB3A-U	**151290**	CL04; CL45
230	LB1A-S	**151283**	CL00; CL01; CL02; CL25	575	LB3A-Y	**151291**	CL04; CL45
460	LB1A-U	**151284**	CL00; CL01; CL02; CL25	208	LB4A-L	**151292**	CL06; CL07; CL08; CL09
575	LB1A-Y	**151285**	CL00; CL01; CL02; CL25	230	LB4A-S	**151293**	CL06; CL07; CL08; CL09
24	LB3A-C	**151286**	CL04; CL45	460	LB4A-U	**151294**	CL06; CL07; CL08; CL09
120	LB3A-J	**151287**	CL04; CL45				

2-Speed Blower Motors for Models SSCBL, SSCDBL

Motor Data			Maximum Motor Amp Draw		Motor P/N (Volts - Phase)			IEC Starter	
Rated HP	Century P/N	Frame	1800 RPM	1200 RPM	208-3	240-3	480-3	Manufacturer's P/N	Reznor P/N
1/.44	M124	M145T	3.8	2.4	**105641**			AEG2SP-S17-C-I-H-O	**114971**
1/.44	M124	M145T	3.4	2.2		**105641**		AEG2SP-S17-C-I-H-O	**114971**
1/.44	M109	M145T	1.7	1.1			**105642**	AEG2SP-S17-E-G-F-O	**114972**
1.5/.68	M125	N145T	5.4	3.1	**105643**			AEG2SP-S17-C-K-I-O	**114973**
1.5/.68	M125	N145T	4.9	2.8		**105643**		AEG2SP-S17-C-K-I-O	**114973**
1.5/.68	M104	N145T	2.4	1.4			**105644**	AEG2SP-S17-E-H-G-O	**114974**
2/.88	M220	S182T	6.5	4.2	**105645**			AEG2SP-S17-C-L-K-O	**114975**
2/.88	M220	S182T	5.9	3.8		**105645**		AEG2SP-S17-C-L-I-O	**114976**
2/.88	M207	S182T	3.4	2.1			**105646**	AEG2SP-S17-E-I-H-O	**114977**
3/1.3	M221	S184T	9.3	5.3	**105647**			AEG2SP-S17-C-M-K-O	**114978**
3/1.3	M221	S184T	8.4	4.8		**105647**		AEG2SP-S17-C-M-K-O	**114978**
3/1.3	M208	S184T	4.6	2.6			**105648**	AEG2SP-S17-E-K-H-O	**114979**
5/2.2	M320	S215T	17.2	11.3	**105870**			AEG2SP-S17-C-O-M-O	**114980**
5/2.2	M320	S215T	15.5	10.2		**105870**		AEG2SP-S17-C-O-M-O	**114980**
5/2.2	M305	S215T	7.1	4.8			**105871**	AEG2SP-S17-E-L-K-O	**114981**
7.5/3.3	M317	Y215T	21.6	13.6	**105872**			AEG2SP-S17-C-O-N-O	**114982**
7.5/3.3	M317	Y215T	19.5	12.3		**105872**		AEG2SP-S17-C-O-N-O	**114982**
7.5/3.3	M315	D215T	10.0	6.0			**105873**	AEG2SP-S17-E-M-L-O	**114983**
10/4.4	M421	S256T	31.0	19.4	**105874**			AEG2SP-S17-C-P-O-O	**114984**
10/4.4	M421	S256T	28.0	17.5		**105874**		AEG2SP-S17-C-P-O-O	**114984**
10/4.4	M413	S256T	13.5	7.5			**105875**	AEG2SP-S17-E-N-L-O	**114985**

IEC Two-Speed Starter

Effective 9/91, IEC two-speed starters are used. Prior to 9/91, units with 2-speed motors were equipped with NEMA starters. If replacing a NEMA starter with an IEC starter, replace the complete starter. See terminal cross reference chart below. Original box and cover may be used for replacement IEC starter.

Terminal Cross-Reference Chart for Replacement IEC Starters

	NEMA	IEC
Starter Wire Terminals		
High Speed	D	2T1
	F	6T3
	E	4T2
Low Speed	A	2T1
	C	6T3
	B	4T2
Relay/Starter Coil Terminals		
	9	96 95

Bracket, Cover, and Auxiliary Contacts for 2-Speed Starter

Description	P/N
Starter Bracket	**115017**
Starter Cover	**115019**
Auxiliary Contact (normally open), AEG #HS17.10	**115951**
Auxiliary Contact (normally closed), AEG #HS17.01	**115952**

Motor Junction Box and Cover for 2HP and larger 2-Speed Motors

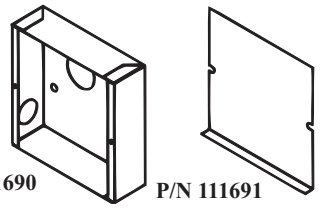

Replacement Parts for NEMA Starters

NEMA Motor Starters

Size	Coil Voltage	GE#	P/N
0	24 Volt	CR306B024	**39919**
1	24 Volt	CR306C024	**39920**
2	24 Volt	CR306D024	**39921**
3	24 Volt	CR306E024	**39922**
4	24 Volt	CR306F024	**91519**
0	115 Volt	CR306B002	**111523**
0	208 Volt	CR306B023	**111524**
0	230 Volt	CR306B003	**111525**
0	460 Volt	CR306B004	**111522**
1	115 Volt	CR306C002	**111526**
1	208 Volt	CR306C023	**111499**
1	230 Volt	CR306C003	**111521**
1	460 Volt	CR306C004	**111527**
2	208 Volt	CR306D023	**111528**
2	230 Volt	CR306D003	**111529**
2	460 Volt	CR306D004	**111530**
3	208 Volt	CR306E023	**111531**
3	230 Volt	CR306E003	**111533**
3	460 Volt	CR306E004	**111532**
3	575 Volt	CR306E004	**119852**
4	208 Volt	CR306F023	**111534**

Heaters for NEMA Starters

HP/Voltage/Phase	GE#	Reznor P/N
5/208/3	CR123C18.0B	**89941** or **110617**
5/230/3 and 10/460/3	CR123C16.3B	**16193** or **110626**
5/460/3	CR123C8.67A	**16192** or **110619**
5/208/3	CR123C19.8B	**91542**
7.5/208/3	CR123C25.0B	**16196**
7.5/230/3	CR123C22.8B	**89924** or **110622**
7.5/460/3	CR123C12.5B	**17257** or **110624**
10/208/3	CR123C33.0B	**89947** or **110625**
10/230/3	CR123C30.3B	**89949** or **110627**
10/460/3	CR123C137B	**110623**
15/208/3	CR123F56.7B	**91543**
15/230/3	CR123FC40.0B	**89933**
15/460/3	CR123C21.4B	**19556**
20/208/3 and 25/230/3	CR123F77.28B	**91544**
20/230/3	CR123F65.8B	**91545**
25/208/3 and 30/230/3	CR123F91.4B	**91546**
25/460/3	CR123C36.6B	**16195**
30/208/3	CR123F10.4C	**91547**
30/460/3	FA30B	**119851**
30/575/3	F327B	**121175**

Holding Coils for NEMA Starters

Size	Coil Voltage	GE#	P/N
0/1	24	15D21G024	**48531**
0/1	115	15D21G002	**48507**
0/1	208	15D21G023	**48509**
0/1	230	15D21G003	**73795**
0/1	460	15D21G004	**48512**
0/1	575	15D21G005	**73601**
2	208	15D22G023	**111927**
2	230	15D22G003	**111928**
2	460	15D22G004	**111929**
3	24	55-501336G024	**95093**
3	208	55-501336G023	**111931**
3	230	55-501336G003	**111933**
3	460	55-501336G004	**111932**
4	24	55-501463G024	**102816**
4	208	55-501463G023	**111935**

Electrical Components

Disconnect Switches

Description	Outdoor P/N	Same as Opt	Indoor P/N	Same as Opt
30 Amp 300V Non-Fusible	**40269**	CP5	**40267**	CP1
30 Amp 300V Fusible (less fuses)	**87147**	CP6	**40268**	CP2
30 Amp 600V Non-Fusible	**50367**	CP7	**50365**	CP3
30 Amp 600V Fusible (less fuses)	**50368**	CP8	**50366**	CP4
60 Amp 240V Fusible (less fuses)	**161459**	CP17	**2E+05**	CP27
60 Amp 600V Fusible (less fuses)	**161461**	CP20	**2E+05**	CP33

Toggle Switches

P/N 40277, DPDT, 3-Position Toggle Switch in a 4x4 box (Same as Option CN1)

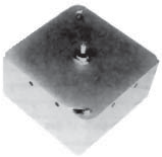

P/N 101900, DPDT, 3-Position Toggle Switch (replaces P/N 21826) - Used in Option CN1 and Remote Console Options RC5, RC6, RC7, RC8, RC10, RC11, RC12

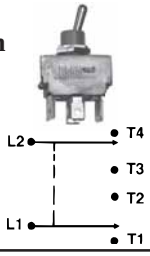

P/N 39732, DPST, 2-Position Toggle Switch in a 2x4 box (Same as Option CN2)

P/N 101902, DPST, 2-Position Toggle Switch (replaces P/N 16816) - Used in Options CN2, AG3, AG8, AG9 and Remote Console Option RC12

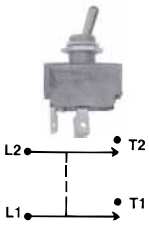

P/N 39733, SPDT, 2-Position Toggle Switch in a 2x4 box (Same as Option CN3)

P/N 101901, DPST, 2-Position Toggle Switch (replaces P/N 1052) - Used in Options CN3, CN4, and Remote Console Options RC3, RC4, RC7, RC8, RC11

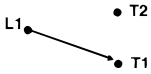

P/N 39748, SPST, 2-Position Toggle Switch in a 2x4 box (Same as Option CN4)

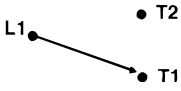

NOTE: When replacing SPST switch with SPDT switch, make wiring connections at appropriate two terminals for switch to function properly.

Electrical Components

Locations of Standard Components (See parts on pages 23-28)

Electrical Box prior to Series 1

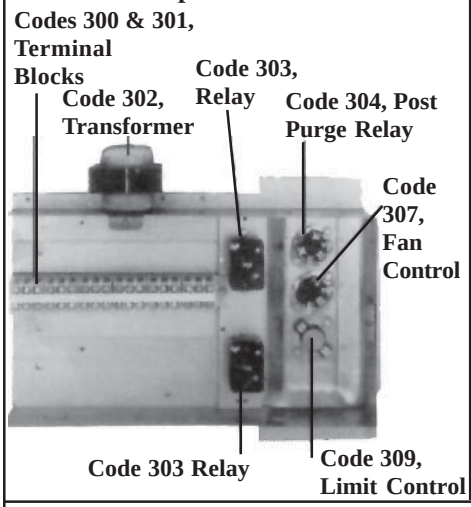

Electrical Box Series 1

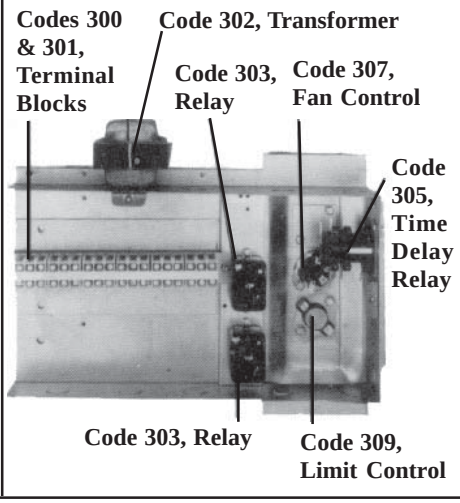

Electrical Box Series 3 and 5

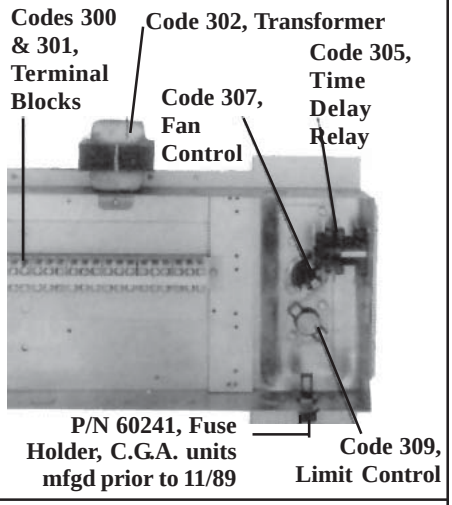

Electrical Box Series 6
(Illustration is prior to 12/99 with ECO and fan control.)

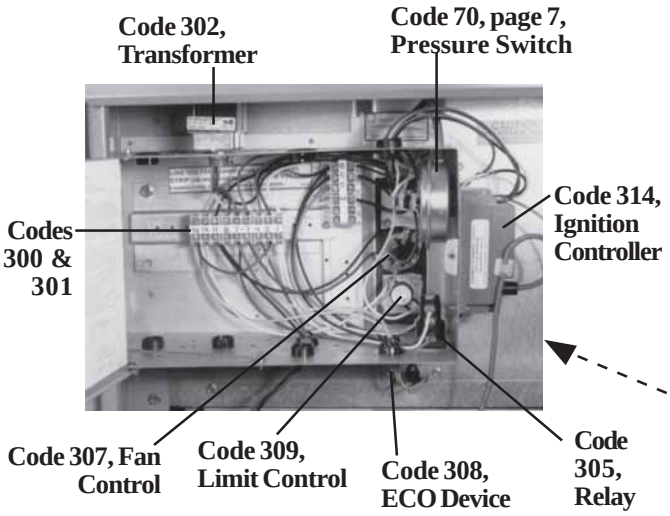

Control Side of Model SC Series 6 with the three outer panels removed

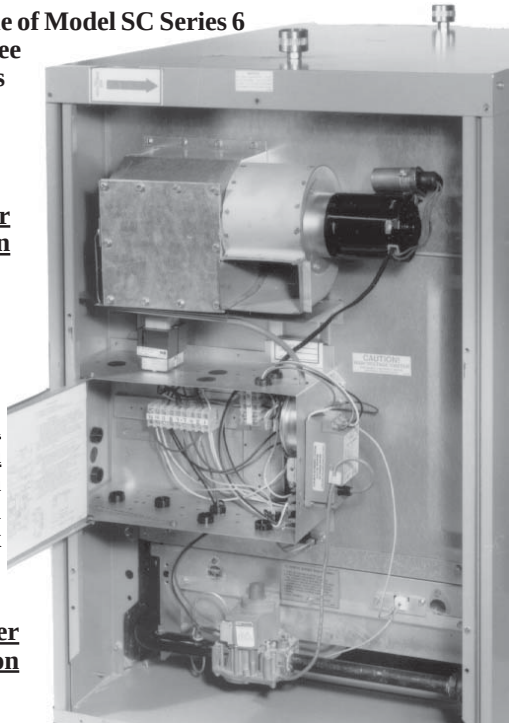

Codes 300 and 301

Terminal Block, P/N 144972

Terminal Block Adapter, P/N 144973

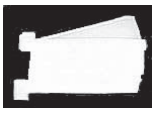

Codes 302 - Control and Damper Transformers, 20 and 40 VA

P/N 103055, 115/24/40VA, Basler #BE141650-WAA
P/N 103497, 208/230/24/40VA, Basler #BE2153900
P/N 103498, 460/24/24/40VA, Basler #BE23975001

Code 303 - RBM Relay 84-20102-101 SPST, P/N 14747

(2 required on SC units prior to Series 3 -- 1 is locking relay; 1 is venter relay)

Code 304 - Post Purge Relay, Thermodisc 32711, P/N 11886

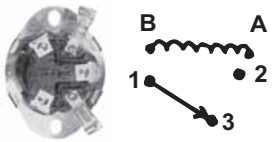

Code 305 - Time Delay Relay, TI 60000GO-17, P/N 46233

20-second delay

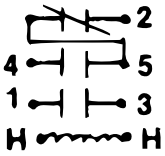

Code 306 - SPDT Relay, RBM 84-20103-301, P/N 18549

Same as Option BG3 and part of Option BG5

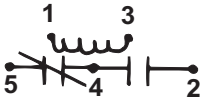

Code 307A - Fan Control, P/N 10357, for units manufactured prior to 12/04 is no longer available. Order Replacement Kit, P/N 209184.

Code 307B - SPST Time Delay Relay (for fan/ blower control), P/N 209164, Thermodisc I2S20-305131
(on units mfgd beginning 12/04)

Code 308 - ECO Device, Micro #G5AP0201, P/N 131450
ECO used on SC, SCA, SCB, SCE Series 6 on units manufactured prior to 12/99

Mounting Plate, P/N 82633

Code 309A - Limit Control

SC Series 3, 5, and 6 - P/N 50417, opens 125°F; closes 105°F

HSC, SCA, SCB, SCE, SC prior to Series 3 and PV Series - P/N 50418, 145°F

Code 309B - Limit Control Shield for SC, SCA, SCB, SCE, P/N 9704

Code 310A - Limit Controls used on Model Series SSCBL mfgd beginning 1/97 (for older units, see below)

Automatic Reset Limit Control with Linear Sensor, TOD #10HG11, P/N 148588

Automatic Reset Limit Control, TOD #60T11

Key: (Applies to both limit tables)

"BL" Blower Cabinet Air Flow →	Furnace #1	Furnace #2	Furnace #3

Furnace	Size 400	Sizes 500/600/800	Sizes 1050/1200
#1	**50418**; -201220, 145°F **148588**, TOD #10HG11	**50418**, -201220, 145°F	**50417**, -201234, 125°F
#2		**57953**, -201614, 170°F **148588**, TOD #10HG11	**50418**, -201220, 145°F
#3			**57953**, -201614, 170°F **148588**, TOD #10HG11

Code 310B - Limit Controls and Shields used on Model Series SSCBL mfgd prior to 1/97

Limit Shields

P/N 12229

P/N 9704

Automatic Reset Limit Control, TOD #60T11

Furnace	Size 400	Sizes 500/600/800	Sizes 1050/1200
#1	**50418**, -201220, 145°F **12229**, Limit Shield	**50418**, -201220, 145°F **12229**, Limit Shield	**50417**, -201234, 125°F
#2		**57953**, -201614, 170°F	**19080**, -35675, 155°F **9704**, Limit Shield
#3			**57953**, -201614, 170°F

Code 311 - Time Delay Relay, RBM 30-8106-183, P/N 11606
Same as Option BH2

30-second delay

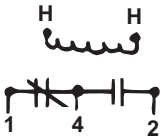

Code 312 - Time Delay Relay, T & B Agastat TM1ULA, P/N 89661

Used in freezestat circuit; used in Option AG39 and AG40 prior to 7/00

Code 313 - Freezestat Relay, Products Unltd 9400-04Q180, 24V Coil, SPDT, P/N 103317

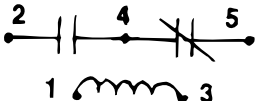

Code 314 - Time Delay Relay, SPDT, 24V, Thermodisc 12S30, P/N 174810

Used in Option AG39 and AG40

Code 315 - Summer/ Winter Switch
Used in Options BF4 and CH1

P/N 3745 (6 Amp) - through Size 200
P/N 8338 (10 Amp) - Sizes 225-400

Code 316 - Freezestat, J/C #AI9AAF-12C, 25-225°F, P/N 126170, (replaces P/N 16108)

Bulb Clamp, P/N 100260

Grommet Clamp, P/N 131993
Cable Clamp, P/N 132065

Code 317 - Firestat, Honeywell #L4029E 1029, Manual reset opens at 200°F, P/N 42782

Firestat Gasket, P/N 121041
(used when firestat is installed less cover)

Firestat Shield, P/N 120021
(used with discharge firestat only)

Code 318A - Recycling Ignition Controller, J/C G67BG-5, P/N 97782

Code 318B - Ignition Controller with lockout (120-second timing), J/C G770NGC-4, P/N 97547

Electrical Components (cont'd)

Location and Components for Installing Discharge Sensor

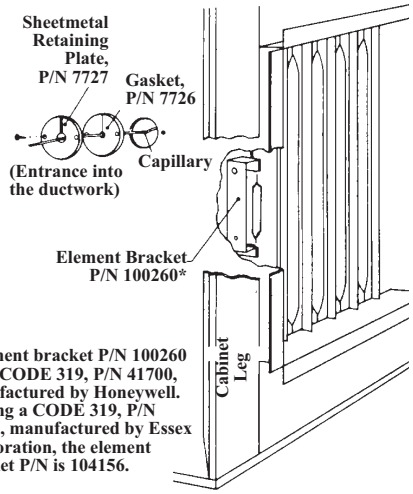

*Element bracket P/N 100260 is for CODE 319, P/N 41700, manufactured by Honeywell. If using a CODE 319, P/N 41700, manufactured by Essex Corporation, the element bracket P/N is 104156.

Code 319, Two-Stage Ductstat, Honeywell T678A1015, P/N 41700

55-58°F, Capillary Length 5' - Used in Gas Control Options AG3, AG4, and AG5

Bulb Holder, P/N 100260
Cable Strap, P/N 16227

Code 320A, Ductstat Sensor and Holder for Code 320B Remote Ductstats

Ductstat Sensor Holder, #TE6001-1, P/N 115850

Ductstat Sensor only, #A99BC-25C, P/N 115851, (part of P/N 115848 below)

Code 320B - Remote Ductstat Modules Used in Gas Control Options AG15-AG20

A = Ductstat Temperature Selector Module, J/C A350AA-1C, **P/N 115848**

B = Stage Adder Module, J/C S350AA-1C, **P/N 115849**

C = Digital Temperature Display Module, J/C D350AA-1C, **P/N 115852**

Code 321, Discharge Sensor for Modulating Gas Control Options

P/N 48041, Maxitrol TS-121, for Options AG8 and AG9

P/N 133228, Maxitrol TS-194, for Option AG 39 and 41

Gasket, P/N 104138

Code 322, P/N 134170, Signal Conditioner for Modulating Gas Control Options AG21 and AG40

Code 323, Amplifiers for Modulating Gas Control Options

P/N 48035, Maxitrol A1010B, used in Opt AG7 and AG9 on single furnace systems (SCE & SSCBL400)

P/N 48036, Maxitrol A1011B, used in AG7 and AG9 on multiple furnace systems (SSCBL 500-1200)

P/N 48037, Maxitrol 1010F, used in Opt AG8 on single furnace systems (SCE & SSCBL400)

P/N 48038, Maxitrol 1011F, used in AG8 on multiple furnace systems (SSCBL 500-1200)

P/N 174848, Maxitrol A1092, used in Option AG39, AG40, AG41, and AG42

Code 324, Remote Temperature Selectors for Modulating Gas Control Options

P/N 48042, Maxitrol TD121, used in Opt AG9

P/N 174849, Maxitrol TD92-0509, used in Opt AG39, AG40, AG41, AG42

Codes 325, 326, 327 - Gas Pressure Switches

Bracket, P/N 100261

Codes 325 & 326 - Low Gas Pressure Switch, P/N 93849 (Range 1-6" w.c.); **P/N 149176** (Range 6-24" w.c.) Automatic Reset, Settings - 50% of minimum inlet gas pressure as stated on the unit rating plate

Code 327 - High Gas Pressure Switch, P/N 93850, Manual Reset, Settings - 125% of normal manifold gas pressure as stated on the unit rating plate

Vent Limiter, Maxitrol A1209, P/N 123481

Code 328 - Gas Pressure Switches used in Gas Control Options AG39, AG40, AG41, AG42

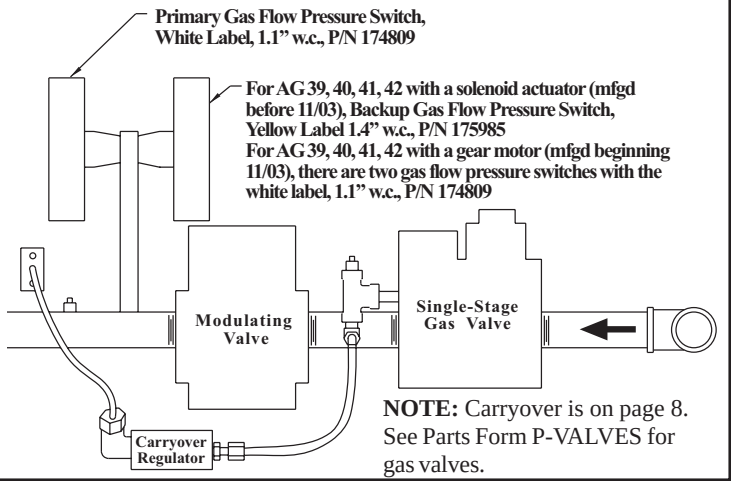

NOTE: Carryover is on page 8. See Parts Form P-VALVES for gas valves.

Codes 329 and 330 - Fuse and Fuseholder

Fuse Holder, P/N 38635

Fuses:
2-1/2 Amp, P/N 61542
5 Amp, P/N 90335
8 Amp, P/N 38636

Code 331 - Convenience Outlet Receptacle, P/N 96912

Code 333 - Motor Contactor (less case), 24V Coil Series 6 - P/N 119625
(replaces P/N 93661)

For blower motor starters, see pages 17-22.

Prior to Series 6 - P/N 122376

Code 334 - Temperature Control, J/C #A19ABC-24, -30 - 100°F, used in Gas Control Option AG41 and AG42 on Model SSCBL, P/N 197204

Code 335 - RBM Relay, Essex 134-2012-101, 24V, P/N 98118

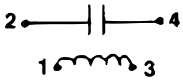

Code 336 - RBM Relay, Products Unlimited 9400-04Q180, SPDT, 24V, P/N 103317

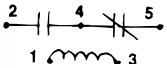

Code 337 - 2-Speed Motor Speed Selector Relay, Essex 91-102006-1300, 24V, P/N 110656

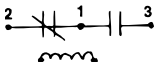

Code 338 - Reverse Flow Limit, #60T11-313154, P/N 103323

Bracket, P/N 18795

Codes 339 - Control and Damper Transformers, 200 and 300 VA

P/N 105202, 575/115/300VA - Use on 115V furnace
P/N 39095, 230/460/575-24-200VA
P/N 39094, 208/24/200VA

Code 340 - KVA Transformer

KVA	Primary 200/208	220/240 440/480	277	575
.25	19807	11279		113556
.50	19808	11100	14993*	
.75	24453*	11217	14994*	
1.0	24454*	16065	14995*	
1.5	24455*	24392*	14996*	
2.0	24456*	26628*	14997*	
3.0	24465*	26630*	14998*	
5.0	24466*	26631*	15003*	

*Special order

Code 341- Dirty Filter Pressure Switch, Tridelta AP4434, P/N 105507

Field adjustable; range .17 to 5.0" ± .05" w.c.

Codes 342 - Blower Air Flow Switch, Tridelta FP6605, Normally Open Non-adjustable, Setpoint .175" w.c., P/N 112107

(Air Proving Switch, Option BW1)

See page 15 for blower sensor probe.

Horizontal Spark Pilot - Models SC, SCA, SCB, SCE, SSCBL *prior to* Series 6

***Replacement Pilot Kits*:**
Natural Gas - P/N 110861
Propane Gas - P/N 110862

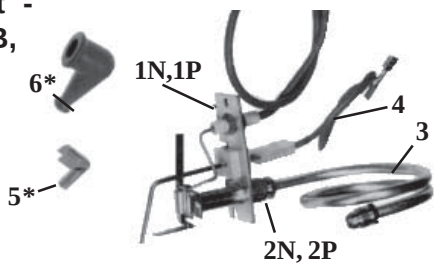

Code	P/N	Component Description
1N	**61145**	Natural gas pilot with orifice, high tension lead, flame probe (less pilot tubing and flame sensor lead)
1P	**61146**	Propane gas pilot with orifice, high tension lead, flame probe (less pilot tubing and flame sensor lead)
2N	**63088**	Natural gas pilot orifice only (7221)
2P	**37801**	Propane gas pilot orifice only (4209)
3	**5145**	Pilot tubing, 22" long
	9664	Nut with breakaway ferrules (2 required)
4	**44675**	Sensor lead 9" long
5*	**112647**	Crimp-on, 90° Rajah terminal connector
6*	**112648**	90° Boot Terminal Protector

Instructions for connecting ignitor lead on replacement spark pilots to Model G60 & G67 ignition controllers:

Crimp-on, 90° Rajah Terminal Connector, P/N 112647

Protective Boot, P/N 112648

Effective with replacement pilots purchased beginning 9/91, the crimp-on connector and protective boot are required (in the kit or separately) on units equipped with a Model G60 or G67BG-NG-2 ignition controller.

(NOTE: These parts are not required when the ignition controller is a Model G67BG-5 or G770NGC-4.)

1. Identify the ignitor wire attached to the pilot electrode. Slip the 90° protective boot on to the wire, as illustrated ➔.
2. On the "open" leg of the 90° crimp-on terminal (P/N 112647), locate a flat, triangular spike tab punched in the metal. With the tip of a small, straight screwdriver, force the spike tab toward the inside of the connector. Straighten the tab to a vertical position.
3. Insert the ignitor wire into that same connector leg (just to the 90° bend) and push the wire onto the protruding spike tab, making sure that the tab penetrates the insulation. (Do not strip the ignitor wire.) Using a crimping tool or pliers, squeeze the sides of the terminal to form a "C" shape. The ignitor wire should now be firmly held by the terminal.
4. Slide the protective boot over the terminal. Holding the boot, attach the 90° Rajah terminal to the ignitor lead Rajah connector on the Model G60 or G67BG/NG-2 ignition controller.

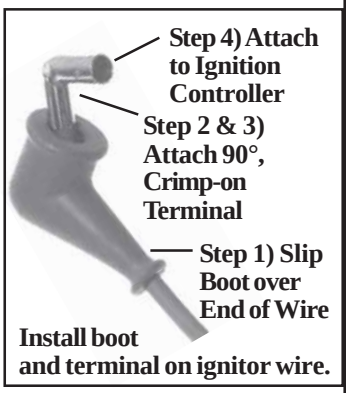

Electrical Components (cont'd)

Vertical Spark Pilot for Models SC, SCA, SCB, SCE Series 6 and SSCBL

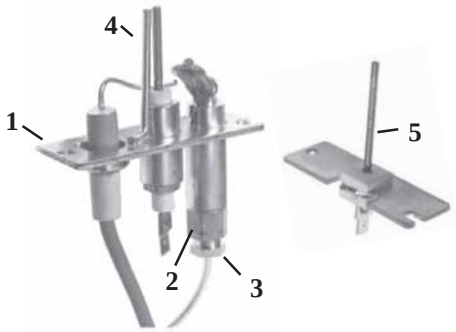

Replacement Pilot Kits		Natural Gas - P/N 131457 Propane Gas - P/N 131458
Code	P/N	Component Description
1	**125251**	Natural Gas Pilot Assy with orifice, pilot tubing, flame probe; less flame sensor lead and fitting (J/C J981HKW 9731-713)
	125671	Propane Gas Pilot Assy with orifice, pilot tubing, flame probe; less flame sensor lead and fitting (J/C J981HKW 9715-413)
2	**93973**	Natural Gas Orifice only, #9731-713 (brass)
	126024	Propane Gas Orifice only, #9715-413 (black)
3	**98698**	Pilot Tubing, 1/8" OD x 18" lg (J/C #B10499-995-11)
	97572	Compression Fitting FTG75 (2 required when replacing pilot tubing)
4	**126104**	Flame probe, J/C Y75AA-2
5	**126101**	Auxiliary flame probe with bracket, J/C Y75 GB-1
6	**125401**	(2) Sensor lead assy, 18 ga. x 14", 150°C

Optional Remote Console

Optional RC style remote console includes a mounting ring so that the console may be either recessed or wall mounted. The box is of 16 gauge steel with knockout holes for field wiring. The cover is made of plastic with custom engraving. Order replacement parts for Option RC remote console by part number.

Code	Description	P/N
343	Remote Console Box - 10-1/16 x 6-5/8 x 2-5/8	**107010**
	Remote Console Box - 15-1/16 x 6-5/8 x 2-5/8	**107011**
344	Mounting Ring for 10-1/16" long box	**107014**
	Mounting Ring for 15-1/16" long box	**107015**
345	Light for Red Lens, Solico #5TD1L-R-B5	**101889**
346	SPDT Switch, Cutler Hammer #7505K6	**101901**
	DPDT Switch, Cutler Hammer #7561K6	**101900**
347	Single-Stage Heating Thermostat	**91919**
	Two-Stage Heating Thermostat	**93435**
	Single-Stage Heating/Cooling Thermostat	**73411**
	Two-Stage Heating/Cooling Thermostat	**93437**
348	Potentiometer (See CODE 372, page 35)	**16110**

Code 343

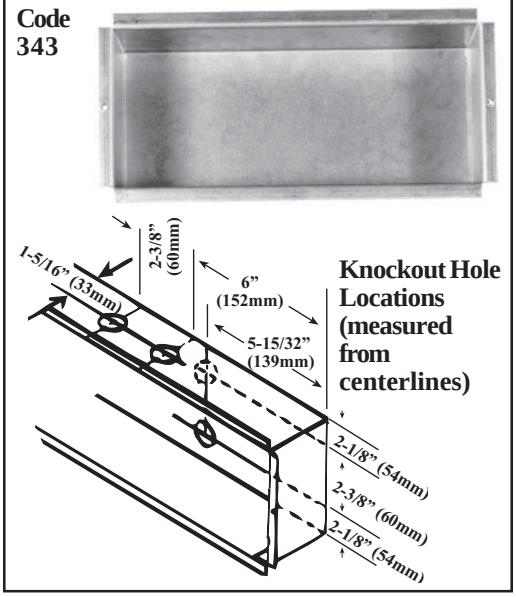

Remote Console Components by Option - Options RC1-RC12

Component	Function	In RC	Code
Blower On Light	Lights when blower is operating	1-12	345
Burner On Light	Lights when burners are lit	1-12	345
Dirty Filter Light	Lights when the pressure switch indicates that filters need to be cleaned or replaced	2, 4, 6, 8, 12	345
On/Off Control Switch	On position energizes the unit for thermostat control. Off position de-energizes the unit and closes optional automatically controlled outside air dampers.	3, 4, 7, 8, 11, 12	346
Summer/Winter/ Off Control Switch	Summer position energizes the blower only. "Winter" position energizes the unit for thermostat control. "Off" position de-energizes the unit and closes optional automatically controlled outside air dampers.	5, 6, 10	346
Heat/Vent/Cool Control Switch	Heat position energizes the unit for thermostat control. Vent position energizes the blower and opens optional automatically controlled outside air dampers. "Cool" position energizes blower, dampers, and cooling unit.	7, 8, 11, 12	346
Cooling Light	Lights when cooling system is operating	7, 9, 11, 12	345

Console Dimensions (wall mounted - not recessed)				
Console Options	Optional Control	Length*	Height*	Depth
RC 1, 2, 3, 4, 5, 6, 7, 8, 9, 10, 12	without	10-3/4"	7-5/8"	2-5/8"
RC 1, 2, 3, 4, 5, 6, 9	with	10-3/4"	7-5/8"	2-5/8"
RC 7, 8, 10, 12	with	15-3/4"	7-5/8"	2-5/8"
RC 11	with & without	15-3/4"	7-5/8"	2-5/8"
* Subtract 5/8" from length and 1" from height when recessing console (not using wall-mounting ring)				

Illinois School Code (Special Manifold Option BM12) includes a Remote Console with Alarm Bell and Silencing Buttons

Console Box, P/N 107010
Light, P/N 101889

Drives (Drives for SCB and SCE are on pages 29-31; SSCBL is on pages 31-33.)

The drive components include the belt, the motor pulley, the blower pulley, and bushings, if required. The table at the right identifies the RPM range of the drive option. Drive options are listed by AM No. **(NOTE: Components listed are for currently used motors. If shaft size is different than listed or if there are no parts listed, check the replacement parts tag and/or contact the distributor or factory service for replacement parts.)**

Belt Tension - Check belt tension. Proper belt tension is important to the long life of the belt and motor. A loose belt will cause wear and slippage. Too much tension will cause excessive motor and blower bearing wear.

If adjustment is required, adjust belt tension by means of the adjusting screw on the motor base until the belt can be depressed 1/2" to 3/4". Tighten the lock nut on the adjusting screw. Be sure the belt is aligned in the pulleys.

OPT	RPM Range	OPT	RPM Range	OPT	RPM Range
AM1	0-450	AM9	801-850	AM17	1201-1250
AM2	451-500	AM10	851-900	AM18	1251-1300
AM3	501-550	AM11	901-950	AM19	1301-1350
AM4	551-600	AM12	951-1000	AM20	1351-1400
AM5	601-650	AM13	1001-1050	AM21	1401-1450
AM6	651-700	AM14	1051-1100	AM22	1451-1500
AM7	701-750	AM15	1101-1150	AM23	1501-1550
AM8	751-800	AM16	1151-1200	AM24	1551-1600

Drive Components - Model SCB and SCE *prior* to Series 6 (See page 3 for explanation of Series No.)

Unit Sizes	Motor HP	AM Nos. (See Key, above.)	Drive No.	Motor Pulley P/N	Motor Pulley Mfr #	Motor Pulley Bore	Blower Pulley P/N	Blower Pulley Mfr #	Blower Pulley Bore	Belt P/N	Belt Mfr #
125	1/4 and 1/3	2,3	24	**4074**	1VL34	1/2	**116396**	AL84	3/4	**6183**	AL420
		4	29	**4074**	1VL34	1/2	**116395**	AL74	3/4	**7948**	AL400
		5,6,7	30	**4074**	1VL34	1/2	**116394**	AL64	3/4	**7949**	AL390
		8, 9,10,11,12,13	35	**4074**	1VL34	1/2	**116393**	AL54	3/4	**10960**	AL370
	1/2, 3/4, 1, 1-1/2, 2	5,6,7,8,9,10	61	**7962**	1VL40	5/8	**116394**	AL64	3/4	**7948**	AL400
		11,12,13	13	**13013**	1VM50	5/8	**116395**	AL74	3/4	**50472**	A45
		14,15,16	17	**13013**	1VM50	5/8	**116394**	AL64	3/4	**50470**	A43
		17,18,19,20,21	41	**13013**	1VM50	5/8	**116393**	AL54	3/4	**50500**	A41
150, 175, 200, 225	1/4 and 1/3	2,3	23	**4074**	1VL34	1/2	**116400**	AL84	1	**6185**	AL450
		4,5	26	**4074**	1VL34	1/2	**116399**	AL74	1	**3938**	AL430
		6,7,8,9	51	**13491**	1VL40	1/2	**116399**	AL74	1	**6184**	AL440
	1/2, 3/4, 1, 1-1/2, 2	2	72	**7962**	1VL40	5/8	**116402**	AL204	1	**65403**	A48
		3,4	53	**7962**	1VL40	5/8	**116101**	AL94	1	**6185**	AL450
		5	77	**13013**	1VM50	5/8	**116402**	AL204	1	**12365**	AL510
		6,7	43	**7962**	1VL40	5/8	**116399**	AL74	1	**6184**	AL440
		8	67	**13013**	1VM50	5/8	**116401**	AL94	1	**50474**	A47
		9,10	6	**7962**	1VL40	5/8	**116398**	AL64	1	**3938**	AL430
		11	63	**13013**	1VM50	5/8	**116399**	AL74	1	**3938**	AL430
		12	11	**13013**	1VM50	5/8	**116398**	AL74	1	**50474**	A47
		13,14,15,16	15	**13013**	1VM50	5/8	**116397**	AL64	1	**50474**	A47
		17,18,19,20,21	19	**13013**	1VM50	5/8	**116403**	AL54	1	**52966**	A44
	3	13,14,15,16,17,18,19,20,21	80	**37451**	1VM50	7/8	**116404**	AL114	1	**65404**	A51
	5	13	60	**37451**	1VM50	7/8	**116399**	AL124	1	**50513**	A52
250, 300	1/2, 3/4, 1, 1-1/2, 2	3	54	**13580**	1VL34	5/8	**116400**	AL74	1	**6184**	AL440
		4,5	3	**7962**	1VL40	5/8	**116399**	AL84	1	**3938**	AL430
		6,7	5	**7962**	1VL40	5/8	**116400**	AL74	1	**6182**	AL410
		8,9,10	65	**13013**	1VM50	5/8	**116399**	AL84	1	**6185**	AL450
		11,12,13	14	**13013**	1VM50	5/8	**116398**	AL74	1	**50472**	A45
		14,15,16	18	**13013**	1VM50	5/8	**116397**	AL64	1	**50470**	A43
		17,18,19,20,21	22	**13013**	1VM50	5/8	**116403**	AL54	1	**50500**	A41
	3	13,14,15,16,17,18,19	70A	**37451**	1VM50	7/8	**116404**	AL114	1	**65403**	A48
350, 400	1/2, 3/4, 1, 1-1/2, 2	2	72	**7962**	1VL40	5/8	**116402**	AL204	1	**65403**	A48
		3,4	53	**7962**	1VL40	5/8	**116101**	AL94	1	**6185**	AL450
		5	77	**13013**	1VM50	5/8	**116402**	AL204	1	**12365**	AL510
		6,7	43	**7962**	1VL40	5/8	**116399**	AL74	1	**6184**	AL440
		8	67	**13013**	1VM50	5/8	**116401**	AL94	1	**50474**	A47
		9,10	6	**7962**	1VL40	5/8	**116398**	AL64	1	**3938**	AL430
		11	63	**13013**	1VM50	5/8	**116399**	AL74	1	**3938**	AL430
		12	11	**13013**	1VM50	5/8	**116398**	AL74	1	**50474**	A47
		13,14,15,16	15	**13013**	1VM50	5/8	**116397**	AL64	1	**50474**	A47
		17,18,19,20,21	19	**13013**	1VM50	5/8	**116403**	AL54	1	**52966**	A44
	3	13,14,15,16,17,18,19,20,21	80	**37451**	1VM50	7/8	**116404**	AL114	1	**65404**	A51
	5	13	60	**37451**	1VM50	7/8	**116399**	AL124	1	**50513**	A52

Drives for Model SCE and Model SCB Series 6 (See page 3 for explanation of Series No.)

Standard Drive Components - SCB A.G.A. Series and SCE Series 6

Unit	Motor	Motor Pulley			Blower Pulley			Belt	
Size	HP	P/N	Mfr #	Bore	P/N	Mfr #	Bore	P/N	Mfr #
125	1/4	**13491**	1VL40	1/2	**116396**	AL84	3/4	**7948**	AL400
150	1/4	**4074**	1VL34	1/2	**116400**	AL84	1	**3938**	AL430
175	1/3	**4074**	1VL34	1/2	**116400**	AL84	1	**3938**	AL430
200	1/3	**4074**	1VL34	1/2	**116400**	AL84	1	**3938**	AL430
225	1/2	**7962**	1VL40	5/8	**116401**	AL94	1	**6186**	AL460
250	1/2	**7962**	1VL40	5/8	**116400**	AL84	1	**6183**	AL420
300	3/4	**7962**	1VL40	5/8	**116399**	AL74	1	**7948**	AL400
350	3/4	**7962**	1VL40	5/8	**116401**	AL94	1	**6186**	AL460
400	1	**7962**	1VL40	5/8	**116401**	AL94	1	**6182**	AL410

Standard Drive Components (TEFC Mtr) - SCB C.G.A. Series 6

Unit	Motor	Motor Pulley			Blower Pulley			Belt	
Size	HP	P/N	Mfr #	Bore	P/N	Mfr #	Bore	P/N	Mfr #
125	1/4	**13491**	1VL40	1/2	**116396**	AL84	3/4	**7948**	AL400
150	1/4	**4074**	1VL34	1/2	**116400**	AL84	1	**3938**	AL430
175	1/3	**13580**	1VL34	5/8	**116400**	AL84	1	**3938**	AL430
200	1/3	**13580**	1VL34	5/8	**116400**	AL84	1	**3938**	AL430
225	1/2	**7962**	1VL40	5/8	**116401**	AL94	1	**6186**	AL460
250	1/2	**13580**	1VL34	5/8	**116400**	AL84	1	**6183**	AL420
300	3/4	**13580**	1VL34	5/8	**116399**	AL74	1	**7948**	AL400
350	3/4	**7962**	1VL40	5/8	**116401**	AL94	1	**6186**	AL460
400	1	**7962**	1VL40	5/8	**116401**	AL94	1	**6182**	AL410

Drive Components - Models SCE and SCB Series 6 with Open Dripproof Motor

Unit	Open Motor		Drive AM Nos.	Motor Pulley			Blower Pulley			Belt		*Shaft
Sizes	HP	Opt	(See Key, page 29.)	P/N	Mfr #	Bore	P/N	Mfr #	Bore	P/N	Mfr #	Centerline
125	1/4	AL2	1,2,3,4	**4074**	1VL34	1/2	**19110**	AK84	3/4	**105493**	A39	11.82
			5,6,7,8,9	**13491**	1VL40	1/2	**111607**	AK74	3/4	**16018**	A38	12.06
	1/3	AL3	2,3,4	**4074**	1VL34	1/2	**19110**	AK84	3/4	**105493**	A39	11.82
			5,6,7,8	**13491**	1VL40	1/2	**111607**	AK74	3/4	**16018**	A38	11.56
			9,10,11,12,13,14	**4074**	1VL34	1/2	**105477**	AK46	3/4	**101291**	A33	11.56
	1/2	AL4	5,6,7,8	**13580**	1VL34	5/8	**19108**	AK64	3/4	**105490**	A36	12.57
			9,10,11	**105476**	1VL44	5/8	**105484**	AK71H①	3/4	**105493**	A39	12.32
			12,13,14,15,16,17,18	**13580**	1VL34	5/8	**105478**	AK41	3/4	**101291**	A33	12.46
	3/4	AL5	7,8,9,10	**7962**	1VL40	5/8	**19108**	AK64	3/4	**16018**	A38	12.7
			11,12,13,14,15	**13580**	1VL34	5/8	**105477**	AK46	3/4	**105488**	A34	12.56
			16,17,18,19,20,21,22	**7962**	1VL40	5/8	**105478**	AK41	3/4	**105488**	A34	12.58
	1	AL6	9,10,11,12,13,14,15	**13580**	1VL34	5/8	**105477**	AK46	3/4	**105488**	A34	12.56
			16,17,18,19,20,21,22	**7962**	1VL40	5/8	**105478**	AK41	3/4	**105488**	A34	12.5
	1-1/2	AL7	11,12,13	**105476**	1VL44	5/8	**19108**	AK64	3/4	**16018**	A38	12.4
			14,15,16,17	**7962**	1VL40	5/8	**105479**	AK49	3/4	**105489**	A35	12.43
			18,19,20,21,22	**7962**	1VL40	5/8	**105478**	AK41	3/4	**105488**	A34	12.58
	2	AL8	13,14,15,16,17	**7962**	1VL40	5/8	**105479**	AK49	3/4	**105489**	A35	12.43
			18,19,20,21,22	**7962**	1VL40	5/8	**105478**	AK41	3/4	**105488**	A34	12.58
	3	AL9	13,14,15,16,17	**37451**	1VM50	7/8	**111606**	BK140	3/4	**92221**	B52	12.46
			18,19,20,21,22,23,24	**37451**	1VM50	7/8	**111607**	AK74	3/4	**105493**	A39	12.27
150	1/4**	AL2	2,3,4	**4074**	1VL34	1/2	**19111**	AK84	1	**50470**	A43	13.86
175	1/3	AL3	2,3,4	**4074**	1VL34	1/2	**19111**	AK84	1	**50470**	A43	13.86
200			5,6,7	**4074**	1VL34	1/2	**18797**	AK64	1	**16019**	A40	14.08
225	1/2	AL4	2,3,4	**13580**	1VL34	5/8	**19111**	AK84	1	**50470**	A43	14
			5,6,7,8	**13580**	1VL34	5/8	**18797**	AK64	1	**16019**	A40	14.08
			9,10,11	**13580**	1VL34	5/8	**105481**	AK46	1	**105491**	A37	14.06
	3/4	AL5	5,6,7,8	**13580**	1VL34	5/8	**18797**	AK64	1	**16019**	A40	14.58
			9,10,11,12,13,14,15	**13580**	1VL34	5/8	**105481**	AK46	1	**105491**	A37	14.56
	1	AL6	7,8	**13580**	1VL34	5/8	**18797**	AK64	1	**16019**	A40	14.08
			9,10,11,12,13,14	**13580**	1VL34	5/8	**105481**	AK46	1	**105491**	A37	14.06
			15,16,17	**7962**	1VL40	5/8	**105481**	AK46	1	**16018**	A38	14.18
	1-1/2	AL7	9,10,11	**105476**	1VL44	5/8	**105484**	AK71H③	1	**101412**	A42	13.83
			12,13,14,15,16	**105476**	1VL44	5/8	**105482**	AK56	1	**16019**	A40	14.07
			17,18	**7962**	1VL40	5/8	**105481**	AK46	1	**16018**	A38	14.18
	2	AL8	9,10,11	**7962**	1VL40	5/8	**18797**	AK64	1	**50500**	A41	14.21
			12,13,14,15,16,17	**105476**	1VL44	5/8	**105482**	AK56	1	**16019**	A40	14.07
			18,19,20	**7962**	1VL40	5/8	**105481**	AK46	1	**16018**	A38	14.18
	3	AL9	13,14,15,16,17	**106748**	1VL40	7/8	**111609**	AK99	1	**50474**	A47	14.2
			18,19,20,21	**106748**	1VL40	7/8	**19111**	AK84	1	**52966**	A44	14
	5	AL10	16,17,18,19	**87500**	2VP36	7/8	**91633**	2TB86④	1	**111608**	B45	14.31
			20,21,22,23	**8973**	2VP50	7/8	**7955**	2AK104	1	**50475**	A49	14.07
250	1/2	AL4	2,3,4	**13580**	1VL34	5/8	**19111**	AK84	1	**105493**	A39	11.82
300			5,6,7,8	**13580**	1VL34	5/8	**18797**	AK64	1	**105490**	A36	12.06
	3/4	AL5	5,6,7	**13580**	1VL34	5/8	**18797**	AK64	1	**105490**	A36	12.06
			8,9,10,11	**13580**	1VL34	5/8	**105482**	AK56	1	**105489**	A35	12.24
	1	AL6	7,8,9,10,11	**13580**	1VL34	5/8	**105482**	AK56	1	**105489**	A35	12.24
			12,13,14,15,16	**13580**	1VL34	5/8	**105481**	AK46	1	**101291**	A33	12.06
	1-1/2	AL7	9,10,11	**7962**	1VL40	5/8	**18797**	AK64	1	**105491**	A37	12.2
			12,13,14,15,16	**105476**	1VL44	5/8	**105482**	AK56	1	**105491**	A36	12.06
			17,18,19,20,21,22,23	**105476**	1VL44	5/8	**105481**	AK46	1	**105489**	A35	12.37
	2	AL8	9,10,11	**7962**	1VL40	5/8	**18797**	AK64	1	**105491**	A37	12.2
			12,13,14,15,16	**105476**	1VL44	5/8	**105482**	AK56	1	**105490**	A36	12.06
			17,18,19,20,21,22,23	**105476**	1VL44	5/8	**105481**	AK46	1	**105489**	A35	12.37
	3	AL9	13,14,15,16,17	**106748**	1VL40	7/8	**111609**	AK99	1	**50470**	A43	12.14
			18,19,20,21,22	**37451**	1VM50	7/8	**16153**	AK104	1	**50472**	A45	12.02
	5	AL10	15,16,17,18,19	**87500**	2VP36	7/8	**91633**	2TB86④	1	**111738**	B41	12.27
			20,21,22,23	**8973**	2VP50	7/8	**7955**	2AK104	1	**50472**	A45	12.02

Drive Components - Models SCE and SCB Series 6 with Open Dripproof Motor (cont'd)

Unit Sizes	Open Motor HP	Open Motor Opt	Drive AM Nos. (See Key , page 29.)	Motor Pulley P/N	Motor Pulley Mfr #	Motor Pulley Bore	Blower Pulley P/N	Blower Pulley Mfr #	Blower Pulley Bore	Belt P/N	Belt Mfr #	*Shaft Centerline
350	3/4	AL5	2,3,4	**13580**	1VL34	5/8	**19111**	AK84	1	**52966**	A44	14.37
400			5,6	**7962**	1VL40	5/8	**19111**	AK84	1	**52966**	A44	14.01
	1	AL6	3,4,5,6	**13580**	1VL34	5/8	**105484**	AK71H③	1	**50500**	A41	13.98
			7,8,9,10,11	**13580**	1VL34	5/8	**105482**	AK56	1	**105493**	A39	14.25
	1-1/2	AL7	6,7,8,9	**7962**	1VL40	5/8	**105484**	AK71H③	1	**101412**	A42	14.12
			10,11,12,13	**105476**	1VL44	5/8	**18797**	AK64	1	**101412**	A42	13.91
			14,15,16,17,18	**7962**	1VL40	5/8	**105481**	AK46	1	**16018**	A38	14.18
	2	AL8	9,10,11	**7962**	1VL40	5/8	**18797**	AK64	1	**50500**	A41	14.21
			12,13,14,15,16	**105476**	1VL44	5/8	**105482**	AK56	1	**16019**	A40	14.07
			17,18,19,20	**7962**	1VL40	5/8	**105481**	AK46	1	**16018**	A38	14.18
	3	AL9	9,10,11,12,13	**106758**	1VL44	7/8	**50520**	AK99	1	**16131**	A54	14.22
			14,15,16,17,18,19	**106758**	1VL44	7/8	**16153**	AK104	1	**65403**	A48	13.97
	5	AL10	12,13,14,15,16,17	**6599**	2VP42	7/8	**7955**	2AK104	1	**65403**	A48	14.11
			18,19,20,21,22	**8973**	2VP50	7/8	**7955**	2AK104	1	**50475**	A49	14.06

*Distance between blower shaft and motor centerline with belts tensioned properly. **Not for Model 200 or 225.

① Use 3/4 "H" Blower Pulley Bushing, P/N 105487 ③ Use 1 "H" Blower Pulley Bushing, P/N 92203

④ Use 1 "Q1" Motor Pulley Bushing, P/N 6605

Drive Components - Model SCE and Model SCB Series 6 with Totally Enclosed Motor

Unit Sizes	TEFC Motor HP	TEFC Motor Opt	Drive AM Nos. (See Key, page 29.)	Motor Pulley P/N	Motor Pulley Mfr #	Motor Pulley Bore	Blower Pulley P/N	Blower Pulley Mfr #	Blower Pulley Bore	Belt P/N	Belt Mfr #	*Shaft Centerline
125	1/4	AL19	1,2,3,4	**13580**	1VL34	5/8	**19110**	AK84	3/4	**16019**	A40	12.32
			5,6,7,8,9	**7962**	1VL40	5/8	**111607**	AK74	3/4	**105493**	A39	12.56
	1/3	AL20	2,3,4	**4074**	1VL34	1/2	**19110**	AK84	3/4	**105493**	A39	11.82
			5,6,7,8	**13491**	1VL40	1/2	**111607**	AK74	3/4	**16018**	A38	11.56
			9,10,11,12,13,14	**4074**	1VL34	1/2	**105477**	AK46	3/4	**101291**	A33	11.56
	1/2	AL21	5,6,7,8	**13580**	1VL34	5/8	**19108**	AK64	3/4	**105490**	A36	12.57
			9,10,11	**105476**	1VL44	5/8	**105484**	AK71H①	3/4	**105493**	A39	12.32
			12,13,14,15,16,17,18	**13580**	1VL34	5/8	**105478**	AK41	3/4	**101291**	A33	12.46
	3/4	AL22	7,8,9,10	**7962**	1VL40	5/8	**19108**	AK64	3/4	**16018**	A38	12.7
			11,12,13,14,15	**13580**	1VL34	5/8	**105477**	AK46	3/4	**105488**	A34	12.56
			16,17,18,19,20,21,22	**7962**	1VL40	5/8	**105478**	AK41	3/4	**105488**	A34	12.58
	1	AL23	9,10,11,12,13,14,15	**13580**	1VL34	5/8	**105477**	AK46	3/4	**105488**	A34	12.56
			16,17,18,19,20,21,22	**7962**	1VL40	5/8	**105478**	AK41	3/4	**105488**	A34	12.5
	1-1/2	AL24	11,12,13	**105476**	1VL44	5/8	**19108**	AK64	3/4	**16018**	A38	12.4
			14,15,16,17	**7962**	1VL40	5/8	**105479**	AK49	3/4	**105489**	A35	12.43
			18,19,20,21,22	**7962**	1VL40	5/8	**105478**	AK41	3/4	**105488**	A34	12.58
150	1/4	AL19	1,2,3,4	**13580**	1VL34	5/8	**19111**	AK84	1	**52966**	A44	13.86
175	1/3	AL20	2,3,4	**4074**	1VL34	1/2	**19111**	AK84	1	**50470**	A33	13.86
200			5,6,7	**4074**	1VL34	1/2	**18797**	AK64	1	**16019**	A40	14.06
225	1/2	AL21	2,3,4	**13580**	1VL34	5/8	**19111**	AK84	1	**50470**	A43	14
			5,6,7,8	**13580**	1VL34	5/8	**18797**	AK64	1	**16019**	A40	14.08
			9,10,11	**13580**	1VL35	5/9	**105481**	AK46	1	**105491**	A37	14.06
	3/4	AL22	5,6,7,8	**13580**	1VL34	5/8	**18797**	AK64	1	**16019**	A40	14.58
			9,10,11,12,13,14,15	**13580**	1VL34	5/8	**105481**	AK46	1	**105491**	A37	14.56
	1	AL23	7,8	**13580**	1VL34	5/8	**18797**	AK64	1	**16019**	A40	14.08
			9,10,11,12,13,14	**13580**	1VL34	5/8	**105481**	AK46	1	**105491**	A37	14.06
			15,16,17	**7962**	1VL40	5/8	**105481**	AK46	1	**16018**	A38	14.18
	1-1/2	AL24	9,10,11	**105476**	1VL44	5/8	**105484**	AK71H③	1	**101412**	A42	13.83
			12,13,14,15,16	**105476**	1VL44	5/8	**105482**	AK56	1	**16019**	A40	14.07
			17,18	**7962**	1VL40	5/8	**105481**	AK46	1	**16018**	A38	14.18
	2	AL25	9,10,11	**106748**	1VL40	7/8	**18797**	AK64	1	**50500**	A41	14.21
			12,13,14,15,16,17	**106758**	1VL44	7/8	**105482**	AK56	1	**16019**	A40	14.07
			18,19,20	**106748**	1VL40	7/8	**105481**	AK46	1	**16018**	A38	14.18
	3	AL26	13,14,15,16,17	**106748**	1VL40	7/8	**111609**	AK99	1	**50474**	A47	14.2
			18,19,20,21	**106748**	1VL40	7/8	**19111**	AK84	1	**52966**	A44	14
250	1/2	AL21	2,3,4	**13580**	1VL34	5/8	**19111**	AK84	1	**105493**	A39	11.82
300			5,6,7,8	**13580**	1VL34	5/8	**18797**	AK64	1	**105491**	A37	12.06
	3/4	AL22	5,6,7	**13580**	1VL34	5/8	**18797**	AK64	1	**105491**	A37	12.06
			8,9,10,11	**13580**	1VL34	5/8	**105482**	AK56	1	**105489**	A35	12.24
	1	AL23	7,8,9,10,11	**13580**	1VL34	5/8	**105482**	AK56	1	**105489**	A35	12.24
			12,13,14,15,16	**13580**	1VL34	5/8	**105481**	AK46	1	**101291**	A33	12.06
	1-1/2	AL24	9,10,11	**7962**	1VL40	5/8	**18797**	AK64	1	**105491**	A37	12.2
			12,13,14,15,16	**105476**	1VL44	5/8	**105482**	AK56	1	**105490**	A36	12.06
			17,18,19,20,21,22,23	**105476**	1VL44	5/8	**105481**	AK46	1	**105489**	A35	12.37
	2	AL25	9,10,11	**106748**	1VL40	7/8	**18797**	AK64	1	**105491**	A37	12.2
			12,13,14,15,16	**106758**	1VL44	7/8	**105482**	AK56	1	**105490**	A36	12.06
			17,18,19,20,21,22,23	**106758**	1VL44	7/8	**105481**	AK46	1	**105489**	A35	12.37
	3	AL26	13,14,15,16,17	**106748**	1VL40	7/8	**111609**	AK99	1	**50470**	A43	12.14
			18,19,20,21,22	**37451**	1VM50	7/8	**16153**	AK104	1	**50472**	A45	12.02

Drive Components - Model SCE and Model SCB Series 6 with Totally Enclosed Motor (cont'd)

Unit Sizes	TEFC Motor HP	TEFC Motor Opt	Drive AM Nos. (See Key, page 29.)	Motor Pulley P/N	Motor Pulley Mfr #	Motor Pulley Bore	Blower Pulley P/N	Blower Pulley Mfr #	Blower Pulley Bore	Belt P/N	Belt Mfr #	*Shaft Centerline
350 400	3/4	AL22	2,3,4	**13580**	1VL34	5/8	**19111**	AK84	1	**52966**	A44	14.37
			5,6	**7962**	1VL40	5/8	**19111**	AK84	1	**52966**	A44	14.01
	1	AL23	3,4,5,6	**13580**	1VL34	5/8	**105484**	AK71H③	1	**50500**	A41	13.98
			7,8,9,10,11	**13580**	1VL34	5/8	**105482**	AK56	1	**105493**	A39	14.25
	1-1/2	AL24	6,7,8,9	**7962**	1VL40	5/8	**105484**	AK71H③	1	**101412**	A42	14.12
			10,11,12,13	**105476**	1VL44	5/8	**18797**	AK64	1	**101412**	A42	13.91
			14,15,16,17,18	**7962**	1VL40	5/8	**105481**	AK46	1	**16018**	A38	14.18
	2	AL25	9,10,11	**106748**	1VL40	7/8	**18797**	AK64	1	**50500**	A41	14.21
			12,13,14,15,16	**106758**	1VL44	7/8	**105482**	AK56	1	**16019**	A40	14.07
			17,18,19,20	**106748**	1VL40	7/8	**105481**	AK46	1	**16018**	A38	14.18
	3	AL26	9,10,11,12,13	**106758**	1VL44	7/8	**50520**	AK134	1	**16131**	A54	14.22
			14,15,16,17,18,19	**106758**	1VL44	7/8	**16153**	AK104	1	**65403**	A48	13.97

*Distance between blower shaft and motor centerline with belts tensioned properly. **Not for Model 200 or 225.

① Use 3/4 "H" Blower Pulley Bushing, P/N 105487 ③ Use 1 "H" Blower Pulley Bushing, P/N 92203

④ Use 1 "Q1" Motor Pulley Bushing, P/N 6605

Drive Components - Model Series SSCBLwith Open Motor (See NOTE, page 29.)

Unit Size	Open Motor HP	Open Motor Opt	Voltage Option	Drive AM Nos. (See Key, page 29.)	Motor Pulley P/N	Motor Pulley Mfr #	Motor Pulley Bore	Blower Pulley P/N	Blower Pulley Mfr No.	Blower Pulley Bore	Belt P/N	Belt Qty	Belt Mfr #	*Shaft Centerline
All "BL" Units	1	AL6	AK1 (115/1); AK2 (208/1); AK3 (230/1); AK5 (208/3); AK6 (230/3); AK7 (460/3)	AM 2, 3, 4	**13580**	1VL34	5/8	**111862**	AK84	1-3/16	**16134**	1	A57	20.94
				AM 5, 6, 7	**13580**	1VL34	5/8	**105484**	AK71H[A]	1-3/16	**16134**	1	A57	21.03
			AK8 (575/3)	AM 2, 3, 4			7/8				**16134**	1	A57	20.94
				AM 5, 6, 7			7/8				**16134**	1	A57	21.03
	1-1/2	AL7	AK1 (115/1); AK2 (208/1); AK3 (230/1); AK5 (208/3); AK6 (230/3); AK7 (460/3)	AM 3, 4, 5, 6, 7	**13580**	1VL34	5/8	**105484**	AK71H[A]	1-3/16	**16134**	1	A57	21.03
				AM 8, 9, 10, 11	**105476**	1VL44	5/8	**106256**	AK74	1-3/16	**16134**	1	A57	21.11
			AK8 (575/3)	AM 3, 4, 5, 6, 7			7/8				**16134**	1	A57	21.03
				AM 8, 9, 10, 11			7/8				**16134**	1	A57	21.11
	2	AL8	AK1 (115/1); AK2 (208/1); AK3 (230/1)	AM 3, 4, 5, 6, 7			5/8				**16132**	1	A55	20.03
				AM 8, 9, 10, 11			5/8				**16133**	1	A56	20.85
				AM 12, 13, 14, 15, 16			5/8				**16131**	1	A54	21.07
			AK5 (208/3); AK6 (230/3); AK7 (460/3); AK8 (575/3)	AM 3, 4, 5, 6, 7	**110125**	1VP34	7/8	**105484**	AK71H[A]	1-3/16	**16132**	1	A55	20.03
				AM 8, 9, 10, 11	**106758**	1VL44	7/8	**105484**	AK71H[A]	1-3/16	**16133**	1	A56	20.85
				AM 12, 13, 14, 15, 16	**106758**	1VL44	7/8	**110807**	AK56H[A]	1-3/16	**16131**	1	A54	21.07
	3	AL9	AK2 (208/1); AK3 (230/1)	AM 7, 8, 9			5/8				**92264**	1	A78	20.95
				AM 10, 11, 12, 13			5/8				**16558**	1	A69	20.96
				AM 14, 15, 16, 17, 18			5/8				**111870**	1	A66	20.92
			AK5 (208/3); AK6 (230/3); AK7 (460/3); AK8 (575/3)	AM 7, 8, 9	**37451**	1VM50	7/8	**16160**	AK184	1-3/16	**92264**	1	A78	20.95
				AM 10, 11, 12, 13	**106758**	1VL44	7/8	**16158**	AK134	1-3/16	**16558**	1	A69	20.96
				AM 14, 15, 16, 17, 18	**37451**	1VM50	7/8	**16156**	AK124	1-3/16	**111870**	1	A66	20.92
	5	AL10	AK5 (208/3); AK6 (230/3); AK7 (460/3); AK8 (575/3)	AM 8,9,10,11	**6599**	2VP42	7/8	**16161**	2AK134	1-3/16	**92408**	1	A68	21.08
				AM 12,13,14,15	**87500**	2VP36	7/8	**16003**	2BK100	1-3/16	**88560**	1	A61	21.01
				AM 16, 17, 18, 19, 20	**6599**	2VP42	7/8	**16003**	2BK100	1-3/16	**16137**	1	A62	21.08
	7-1/2	AL11		AM 10, 11	**16150**	2VP62	1-3/8	**16168**	2BK110	1-3/16	**92414**	1	B64	20.47
				AM 12, 13	**16150**	2VP62	1-3/8	**16003**	2BK100	1-3/16	**7950**	1	B62	20.31
				AM 14, 15, 16	**16150**	2VP62	1-3/8	**91633**	2TB86[B]	1-3/16	**92280**	1	BX59	20.47
				AM 17, 18, 19, 20	**110771**	2VP65	1-3/8	**89648**	2BK80H[A]	1-3/16	**92280**	1	BX59	20.37
	10	AL12		AM 10, 11	**16150**	2VP62	1-3/8	**16168**	2BK110	1-3/16	**92414**	1	B64	20.47
				AM 12, 13	**16150**	2VP62	1-3/8	**16003**	2BK100	1-3/16	**7950**	1	B62	20.31
				AM 14,15,16	**16150**	2VP62	1-3/8	**91633**	2TB86[B]	1-3/16	**92280**	1	BX59	20.47
				AM 17, 18, 19, 20	**110771**	2VP65	1-3/8	**89648**	2BK80H[A]	1-3/16	**92280**	1	BX59	20.37
	**15	AL15		**AM 15, 16, 17, 18, 19, 20	**89644**	3MVPP40-B54	1-5/8	**106258**	3TB66H[G]	1-7/16	**92224**	1	B56	20.47
				**AM 21, 22, 23, 24	**89644**	3MVPP40-B54	1-5/8	**106262**	3BK65H[C]	1-7/16	**92224**	1	B56	20.53
	**20	AL16		**AM 17, 18, 19, 20, 21, 22, 23, 24	**89644**	3MVPP40-B54	1-5/8	**106262**	3BK65H[C]	1-7/16	**92239**	1	BX54	20.11
	***15	AL15		***AM 15, 16, 17	**148593**[E]	2MVP70B84P	1-5/8"	**113811**	2BK120H[D]	1-7/16"	**80841**	2	BX67	20.47
				***AM 18, 19, 20, 21	**148594**[F]	2MVP80B94Q	1-5/8"	**114045**	2B5V110[G]	1-7/16"	**148605**	2	BX69	20.53
				***AM 22, 23, 24	**148593**[E]	2MVP70B84P	1-5/8"	**148597**	2B5V90[G]	1-7/16"	**114258**	2	BX64	20.11
	***20	AL16		***AM17	**148593**[E]	2MVP70B84P	1-5/8"	**113811**	2BK120H[D]	1-7/16"	**80841**	2	BX67	
				***AM 18, 19, 20, 21	**148594**[F]	2MVP80B94Q	1-5/8"	**114045**	2B5V110[G]	1-7/16"	**148605**	2	BX69	
				***AM 22, 23, 24	**148593**[E]	2MVP70B84P	1-5/8"	**148597**	2B5V90[G]	1-7/16"	**114258**	2	BX64	

*Distance between blower shaft and motor centerline with belts tensioned properly. ** Three-Groove Drives ***Two-Groove Drives

[A] Use 1-3/16 "H" Blower Pulley Bushing, P/N **106260**

[B] Use 1-3/16 "Q1" Blower Pulley Bushing, P/N **39460**

[C] Use 1-7/16 "H" Blower Pulley Bushing, P/N **89659**

[D] Use 1-7/16 "B" Blower Pulley Bushing, P/N **114033**

[E] Use 1-5/8 "P2" Motor Pulley Bushing, P/N **148595**

[F] Use 1-5/8 "Q2" Motor Pulley Bushing, P/N **148596**

[G] Use 1-7/16 "P1" Blower Pulley Bushing, P/N **106261**

Drive Components - Model SSCBL with Totally Enclosed Motor (See NOTE, page 29.)

Unit Size	TEFC Motor HP	TEFC Motor Opt	Voltage Option	Drive AM Nos. (See Key, pg 29.)	Motor Pulley P/N	Motor Pulley Mfr #	Motor Pulley Bore	Blower Pulley P/N	Blower Pulley Mfr #	Blower Pulley Bore	Belt P/N	Belt Qty	Belt Mfr #	*Shaft Centerline
All "BL"	1	AL23	AK1 (115/1); AK2 (208/1); AK3 (230/1); AK5 (208/3); AK6 (230/3); AK7 (460/3); AK8 (575/3)	AM 2, 3, 4	**13580**	1VL34	5/8	**111862**	AK84	1-3/16	**16134**	1	A57	20.94
				AM 5, 6, 7	**13580**	1VL34	5/8	**105484**	AK71H[C]	1-3/16	**16134**	1	A57	21.03
	1-1/2	AL24	AK1 (115/1); AK2 (208/1); AK3 (230/1); AK5 (208/3); AK6 (230/3); AK7 (460/3)	AM 3, 4, 5 ,6, 7	**13580**	1VL34	5/8	**105484**	AK71H[C]	1-3/16	**16134**	1	A57	21.03
				AM 8, 9, 10, 11	**105476**	1VL44	5/8	**106256**	AK74	1-3/16	**16134**	1	A57	21.11
			AK8 (575/3)	AM 3, 4, 5 ,6, 7			7/8				**16134**	1	A57	21.03
				AM 8, 9, 10, 11			7/8				**16134**	1	A57	21.11
	2	AL25	AK1 (115/1); AK3 (230/1); AK5 (208/3); AK6 (230/3); AK7 (460/3); AK8 (575/3)	AM 3, 4, 5, 6, 7	**110125**	1VP34	7/8	**105484**	AK71H[C]	1-3/16	**16132**	1	A55	20.03
				AM 8, 9, 10, 11	**106758**	1VL44	7/8	**105484**	AK71H[C]	1-3/16	**16133**	1	A56	20.85
				AM 12, 13, 14, 15, 16	**106758**	1VL44	7/8	**110807**	AK56H[C]	1-3/16	**16131**	1	A54	21.07
	3	AL26		AM 7, 8, 9	**37451**	1VM50	7/8	**16160**	AK184	1-3/16	**92264**	1	A78	20.95
				AM 10, 11, 12, 13	**106758**	1VL44	7/8	**16158**	AK134	1-3/16	**16558**	1	A69	20.96
				AM 14, 15, 16, 17, 18	**37451**	1VM50	7/8	**16156**	AK124	1-3/16	**111870**	1	A66	20.92
	5	AL27	AK3 (230/1); AK5 (208/3); AK6 (230/3); AK7 (460/3); AK8 (575/3)	AM 8 ,9, 10, 11	**7963**	2VP42	1-1/8	**16161**	2AK134	1-3/16	**16139**	1	A67	21.08
				AM 12, 13, 14, 15	**105581**	2VP50	1-1/8	**16161**	2AK134	1-3/16	**92408**	1	A68	21.01
				AM 16, 17, 18, 19, 20	**7963**	2VP42	1-1/8	**16003**	2BK100	1-3/16	**50477**	1	A60	21.08
	7-1/2	AL32		AM 10, 11	**16150**	2VP62	1-3/8	**16138**	2BK110	1-3/16	**92414**	1	B64	20.47
				AM 12, 13	**16150**	2VP62	1-3/8	**16003**	2BK100	1-3/16	**7950**	1	B62	20.31
				AM 14, 15, 16	**16150**	2VP62	1-3/8	**91633**	2TB86[A]	1-3/16	**92280**	1	BX59	20.47
				AM 17, 18, 19, 20	**110771**	2VP65	1-3/8	**89648**	2BK80H[C]	1-3-16	**92280**	1	BX59	20.37
	10	AL33		AM 10, 11	**16150**	2VP62	1-3/8	**16168**	2BK110	1-3/16	**92414**	1	B64	20.47
				AM 12, 13	**16150**	2VP62	1-3/8	**16003**	2BK100	1-3/16	**7950**	1	B62	20.31
				AM 14, 15, 16	**16150**	2VP62	1-3/8	**91633**	2TB86[A]	1-3/16	**92280**	1	BX59	20.47
				AM 17, 18, 19, 20	**110771**	2VP65	1-3/8	**89648**	2BK80H[C]	1-3/16	**92280**	1	BX59	20.37
	**15 & 20	AL34 AL35	AK5 (208/3); AK6 (230/3); AK7 (460/3); AK8 (575/3)	**AM 15, 16, 17	**148593**	2MVP70B84P[E]	1-5/8	**113811**	2BK120H[D]	1-7/16	**80841**	2	BX67	20.47
				**AM 18, 19, 20, 21	**148594**	2MVP80B94Q[F]	1-5/8	**114045**	2B5V110[G]	1-7/16	**148605**	2	BX69	20.53
				**AM 22, 23, 24	**148593**	2MVP70B84P[E]	1-5/8	**148597**	2B5V90[G]	1-7/16	**114258**	2	BX64	20.11
	***15	AL34		***AM 15, 16, 17	**148593**[E]	2MVP70B84P	1-5/8	**113811**	2BK120H[D]	1-7/16	**80841**	2	BX67	
				***AM 18, 19, 20, 21	**148594**[F]	2MVP80B94Q	1-5/8	**114045**	2B5V110[G]	1-7/16	**148605**	2	BX69	
				***AM 22, 23, 24	**148593**[E]	2MVP70B84P	1-5/8	**148597**	2B5V90[G]	1-7/16	**114258**	2	BX64	
	***20	AL35		***AM17	**148593**[E]	2MVP70B84P	1-5/8	**113811**	2BK120H[D]	1-7/16	**80841**	2	BX67	
				***AM 18, 19, 20, 21	**148594**[F]	2MVP80B94Q	1-5/8	**114045**	2B5V110[G]	1-7/16	**148605**	2	BX69	
				***AM 22, 23, 24	**148593**[E]	2MVP70B84P	1-5/8	**148597**	2B5V90[G]	1-7/16	**114258**	2	BX64	

*Distance between blower shaft and motor centerline with belts tensioned properly. ** Three-Groove Drives ***Two-Groove Drives

[A] Use 1-3/16 "Q1" Blower Pulley Bushing, P/N **39460**

[B] Use 1-7/16 "P1" Blower Pulley Bushing, P/N **106261**

[C] Use 1-3/16 "H" Blower Pulley Bushing, P/N **106260**

[D] Use 1-7/16 "H" Blower Pulley Bushing, P/N **89659**

[E] Use 1-5/8 "P2" Motor Pulley Bushing, P/N 148595

[F] Use 1-5/8 "Q2" Motor Pulley Bushing, P/N 148596

[G] Use 1-7/16 "B" Blower Pulley Bushing, P/N 114033

Drive Components - Model SSCBL with Premium Efficiency Motor

Unit Size	Premium Motor HP	Premium Motor Opt	Voltage Option	Drive AM Nos. (See Key, page 29.)	Motor Pulley P/N	Motor Pulley Mfr No.	Motor Pulley Bore	Blower Pulley P/N	Blower Pulley Mfr No.	Blower Pulley Bore	Belt P/N	Belt Qty	Belt Mfr No.	*Shaft Centerline
All "BL" Units	1	AL36	AK5 (208/3); AK6 (230/3); AK7 (460/3); AK8 (575/3)	AM 2, 3, 4	**110125**	1VP34	7/8	**111862**	AK84	1-3/16	**16134**	1	A57	20.94
				AM 5, 6, 7	**110125**	1VP34	7/8	**105484**	AK71H[A]	1-3/16	**16132**	1	A55	21.03
	1-1/2	AL37		AM 3, 4, 5, 6, 7	**110125**	1VP34	7/8	**105484**	AK71H[A]	1-3/16	**16132**	1	A55	21.03
				AM 8, 9, 10, 11	**106758**	1VL44	7/8	**106256**	AK74	1-3/16	**16134**	1	A57	21.11
				AM 3, 4, 5, 6, 7	**110125**	1VP34	7/8	**105484**	AK71H[A]	1-3/16	**16132**	1	A55	20.03
	2	AL38		AM 8, 9, 10, 11	**106758**	1VL44	7/8	**105484**	AK71H[A]	1-3/16	**16133**	1	A56	20.85
				AM 12, 13, 14, 15, 16	**106758**	1VL44	7/8	**110807**	AK56H[A]	1-3/16	**16131**	1	A54	21.07
	3	AL39		AM 7, 8, 9	**37451**	1VM50	7/8	**16160**	AK184	1-3/16	**92264**	1	A78	20.95
				AM 10, 11, 12, 13	**106758**	1VL44	7/8	**16158**	AK134	1-3/16	**16558**	1	A69	20.96
				AM 14, 15, 16, 17, 18	**37451**	1VM50	7/8	**16156**	AK124	1-3/16	**111870**	1	A66	20.92
	5	AL40		AM 8, 9, 10, 11	**7963**	2VP42	1-1/8	**16161**	2AK134	1-3/16	**16139**	1	A67	21.08
				AM 12, 13, 14, 15	**105881**	2VP50	1-1/8	**16161**	2AK34	1-3/16	**92408**	1	A68	21.01
				AM 16, 17, 18, 19, 20	**7963**	2VP42	1-1/8	**16003**	2BK100	1-3/16	**50477**	1	A60	21.08
	7-1/2	AL41		AM 10, 11	**16150**	2VP62	1-3/8	**16168**	2BK110	1-3/16	**92414**	1	B64	20.47
				AM 12, 13	**16150**	2VP62	1-3/8	**16003**	2BK100	1-3/16	**7950**	1	B62	20.31
				AM 14, 15, 16	**16150**	2VP62	1-3/8	**91633**	2TB86[B]	1-3/16	**92280**	1	BX59	20.47
				AM 17, 18, 19, 20	**110771**	2VP65	1-3/8	**89648**	2BK80H[A]	1-3/16	**92280**	1	BX59	20.37
	10	AL42		AM 10, 11	**16150**	2VP62	1-3/8	**16168**	2BK110	1-3/16	**92414**	1	B64	20.47
				AM 12, 13	**16150**	2VP62	1-3/8	**16003**	2BK100	1-3/16	**7950**	1	B62	20.31
				AM 14, 15, 16	**16150**	2VP62	1-3/8	**91633**	2TB86[B]	1-3/16	**92280**	1	BX59	20.47
				AM 17, 18, 19, 20	**110771**	2VP65	1-3/8	**89648**	2BK80H[A]	1-3/16	**92280**	1	BX59	20.37

Drive Components - Model SSCBL with Premium Efficiency Motor (cont'd)

Unit Size	Premium Motor HP	Premium Motor Opt	Voltage Option	Drive AM Nos. (See Key, page 29.)	Motor Pulley P/N	Motor Pulley Mfr No.	Motor Pulley Bore	Blower Pulley P/N	Blower Pulley Mfr No.	Blower Pulley Bore	Belt P/N	Belt Qty	Belt Mfr No.	*Shaft Centerline
All "BL" Units (contd)	**15 & 20	AL43 AL44	AK5 (208/3); AK6 (230/3); AK7 (460/3); AK8 (575/3)	**AM 15, 16, 17	**148593**	2MVP70B84P[D]	1-5/8	**113811**	2BK120H[C]	1-7/16	**80841**	2	BX67	20.47
				**AM 18, 19, 20, 21	**148594**	2MVP80B94Q[E]	1-5/8	**114045**	2B5V110[F]	1-7/16	**148605**	2	BX69	20.53
				**AM 22, 23, 24	**148593**	2MVP70B84P[D]	1-5/8	**148597**	2B5V90[F]	1-7/16	**114258**	2	BX64	20.11
	***15	AL43		***AM 15, 16, 17	**148593**	2MVP70B84P[D]	1-5/8	**113811**	2BK120H[C]	1-7/16	**80841**	2	BX67	
				***AM 18, 19, 20, 21	**148594**	2MVP80B94Q[E]	1-5/8	**114045**	2B5V110[F]	1-7/16	**148605**	2	BX69	
				***AM 22, 23, 24	**148593**	2MVP70B84P[D]	1-5/8	**148597**	2B5V90[F]	1-7/16	**114258**	2	BX64	
	***20	AL44		***AM17	**148593**	2MVP70B84P[D]	1-5/8	**113811**	2BK120H[C]	1-7/16	**80841**	2	BX67	
				***AM 18, 19, 20, 21	**148594**	2MVP80B94Q[E]	1-5/8	**114045**	2B5V110[F]	1-7/16	**148605**	2	BX69	
				***AM 22, 23, 24	**148593**	2MVP70B84P[D]	1-5/8	**148597**	2B5V90[F]	1-7/16	**114258**	2	BX64	

*Distance between blower shaft and motor centerline with belts tensioned properly. ** Three-Groove Drives ***Two-Groove Drives

[A] Use 1-3/16 "H" Blower Pulley Bushing, P/N **106260**
[B] Use 1-3/16 "Q1" Blower Pulley Bushing, P/N **39460**
[C] Use 1-7/16 "H" Blower Pulley Bushing, P/N **89659**
[D] Use 1-5/8 "P2" Motor Pulley Bushing, P/N **148595**
[E] Use 1-5/8 "Q2" Motor Pulley Bushing, P/N **148596**
[F] Use 1-7/16 "B" Blower Pulley Bushing, P/N **114033**

Drive Components - Model SSCBL with Two-Speed Motor

Unit Size	2-Spd Motor HP	2-Spd Motor Opt	Voltage Option	Drive AM Nos. (See Key, page 38)	Motor Pulley P/N	Motor Pulley Mfr #	Motor Pulley Bore	Blower Pulley P/N	Blower Pulley Mfr #	Blower Pulley Bore	Belt P/N	Belt Qty	Belt Mfr #	*Shaft Centerline
All "BL" Units	1	AL45	AK5 (208/3); AK6 (230/3); AK7 (460/3)	AM 2, 3, 4	**110125**	1VP34	7/8	**111862**	AK84	1-3/16	**16134**	1	A57	20.94
				AM 5, 6, 7	**110125**	1VP34	7/8	**105484**	AK71H[A]	1-3/16	**16132**	1	A55	21.03
	1-1/2	AL46		AM 3, 4, 5, 6, 7	**110125**	1VP34	7/8	**105484**	AK71H[A]	1-3/16	**16132**	1	A55	21.03
				AM 8, 9, 10, 11	**106758**	1VL44	7/8	**106256**	AK74	1-3/16	**16134**	1	A57	21.11
	2	AL47		AM 4, 5	**111681**	1VP50	1-1/8	**16156**	AK124	1-3/16	**111870**	1	A66	20.92
				AM 6, 7, 8, 9	**110151**	1VP44	1-1/8	**111862**	AK84	1-3/16	**92402**	1	A59	21.28
				AM 10, 11, 12, 13	**110151**	1VP44	1-1/8	**112026**	BK85H[A]	1-3/16	**92225**	1	B57	21.22
				AM 14, 15, 16, 17, 18, 19	**110151**	1VP44	1-1/8	**112035**	BK60	1-3/16	**92239**	1	BX54	20.93
	3	AL48		AM 4, 5	**111681**	1VP50	1-1/8	**16156**	AK124	1-3/16	**111870**	1	A66	20.92
				AM 6, 7, 8, 9	**110151**	1VP44	1-1/8	**111862**	AK84	1-3/16	**92402**	1	A59	21.28
				AM 10, 11, 12, 13	**110151**	1VP44	1-1/8	**112026**	BK75H[A]	1-3/16	**92225**	1	B57	21.22
				AM 14, 15, 16, 17, 18, 19	**110151**	1VP44	1-1/8	**112035**	BK60	1-3/16	**92239**	1	BX54	20.93
	5	AL49		AM 8, 9, 10, 11	**106257**	2VP60	1-3/8	**16168**	2BK110	1-3/16	**6010**	1	B65	21.28
				AM 12, 13, 14, 15	**106257**	2VP60	1-3/8	**16167**	2BK90	1-3/16	**92289**	1	BX61	20.93
				AM 16, 17, 18, 19, 20	**106257**	2VP60	1-3/8	**92419**	2TB70[B]	1-3/16	**16143**	1	B59	21.07
	7-1/2	AL50		AM 10, 11	**16150**	2VP62	1-3/8	**16168**	2BK110	1-3/16	**92414**	1	B64	20.47
				AM 12, 13	**16150**	2VP62	1-3/8	**16003**	2BK100	1-3/16	**7950**	1	B62	20.31
				AM 14, 15, 16	**16150**	2VP62	1-3/8	**91633**	2TB86[B]	1-3/16	**92280**	1	BX59	20.47
				AM 17, 18, 19, 20	**110771**	2VP65	1-3/8	**89648**	2BK80H[A]	1-3/16	**92280**	1	BX59	20.37
	10	AL51		AM 13, 14, 15, 16	**91615**	2MPV40-B54	1-5/8	**89648**	2BK80H[A]	1-3/16	**92226**	1	B58	20.47
				AM 17, 18, 19, 20, 21, 22	**91615**	2MPV40-B54	1-5/8	**110810**	2BK70H[A]	1-3/16	**92225**	1	B57	20.37

*Distance between blower shaft and motor centerline with belts tensioned properly.

[A] Use 1-3/16 "H" Blower Pulley Bushing, **P/N 106260.**
[B] Use 1-3/16 "Q1" Blower Pulley Bushing, **P/N 39460.**

Dampers and Controls -

Applies to Models SCE and SSCBL

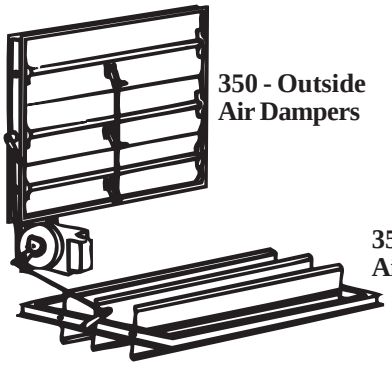

Code 350 - Damper and Frame Assembly for 100% Outside Air or Return Air Dampers (includes one frame and damper blades only)

Model Sizes		P/N
	100, 125	**105421**
	150, 175	**105422**
	200, 225	**105423**
500, 600	250, 300	**105424**
700, 1050	350	**105425**
400, 800, 1200	400	**105426**

Code 351 - Hand Quadrant, P/N 103502

Code 352 - Manual Damper Control Bracket, P/N 175428

Code 353 - Damper Motor for 2-Position Damper (open/closed), J/C M-9206-BGB-2S, P/N 209351

Code 353A - Kit, **P/N 209423,** includes motor **P/N 209351**, a mounting kit, and crankarm to field replace discontinued motors, P/N 66276 and P/N 97385.

Code 355 - Modulating Damper Motor used in Option AR23, M/H #M6194B1011, P/N 115683 (with pressure null switch)

Code	Description	P/N	Components by Option Description - Option AR__												
			6	7	8	9	11	12	13	14	15	16	17	18	23
351	Hand Quadrant #14004728-001	103502	X				X								
352	Manual Damper Control Bracket (replaces P/N 103488)	143182	X				X								
353	2-Position Damper Motor	209351		X	X					X			X		
354	Replacement Kit for Damper Motor P/N 66276 (replaced by 209351 above) and P/N 97385 is **P/N 209423.**														
355	Floating Modulating Damper Motor, #M6194B1011	115683													X
356	Modulating Damper Motor, #M9175A1051 (no end switch)	115681				X		X	X		X	X		X	
357	Optional Modulating Damper Motor, #M9175D1014 (replacement requires auxiliary switch kit, P/N **145881**)	115682				X		X	X		X	X		X	
358	Damper Rod, 1/4 x 13 inches long	112554						X	X	X	X	X	X	X	X
359	Damper Rod, 1/4 x 18 inches long	11560								X			X		
360	Damper Rod, 1/4 x 17 inches long	112556			X	X		X	X		X	X		X	X
361	Damper Rod, 1/4 x 22 inches long	26299		X											
362	Damper Rod, Bent	105420					X								
363	Damper Rod Arm, W-R #135-0007	66278		X											
364	Damper Arm, M/H #20265	12635			X(2)	X	X(2)	X(2)	X(2)	X(3)	X(2)	X(2)	X(3)	X(2)	X(2)
365	Ball and Socket, M/H #27518	12636		X(2)	X(2)	X(2)	X(2)	X(4)	X(4)	X(4)	X(4)	X(4)	X(4)	X(4)	X(4)
366	Crank Arm M/H #221455A	116209				X		X	X		X	X		X	X
367	Damper Arm Support Plate	14225					X								
368	Damper Motor Support Assy	100315		X	X	X		X	X	X	X	X	X	X	X
369	Damper Arm Adjustment Plate	115687						X	X	X	X	X	X	X	
370	Damper Arm Adjustment Plate	142982													X
371	Air Controller Support Bracket	103758				X		X	X	X		X		X	
372	Potentiometer, M/H #112894FA	16110				X			X		X			X	
373	Null Switch (pressure), Dwyer #1640	88052													X
374	Mixed Air Controller, M/H #T991A-1004	16109						X	X		X	X			
375	Outdoor Air Controller, J/C#A19AAF-120	126170								X	X	X			
376	Auxiliary End Switch only for M/H Damper Motors, #Q607B1067	113963													
377	Auxiliary Switch Kit (2 switches), M/H 220736B	145881													
378	DDC (4-20ma) interface module for use with modulating damper motor, Honeywell Q7230A	171134													

Code 361 - Bent Damper Rod

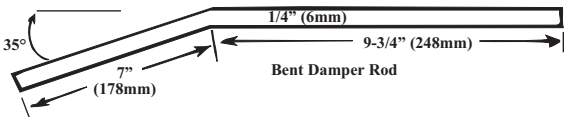

Damper Linkage

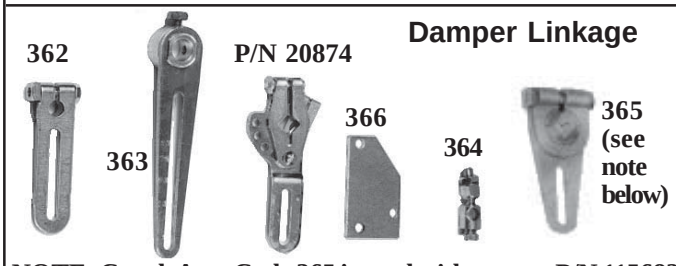

NOTE: Crank Arm Code 365 is used with motors P/N 115682, 115683, and 115681 (used in currently manufactured units)

Use Crank Arm P/N 20874 (illustrated) , M/H #7616BR, with motors P/N 53928, 87059, and 96767

Code 356 - Modulating Damper Motor, M/H M9175A1051 less end switches, P/N 115681 (replaces P/N 53928)

Code 357 (illustrated) - Modulating Damper Motor, M/H M9175D1014, P/N 115682, replacement requires auxiliary switch kit, P/N 145881, (Code 376) (replaces motor P/N 96767)

Code 372 - Potentiometer, M/H 112894FA, P/N 16110

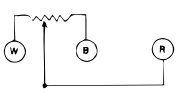

Code 373 - Pressure Null Switch, Dwyer #1640-0, Range .01" to .2" w.c., P/N 88052

Code 374 - Mixed Air Controller, M/H T991-1004, P/N 16109

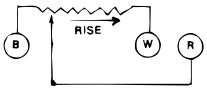

Grommet Clamp, P/N 39224

Code 375 - Outside Air Controller, J/C A19AAF-120, P/N 126170 (replaces P/N 16108)

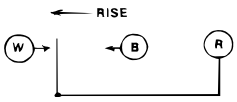

Code 376 - Auxiliary End Switch, P/N 113963, M/H Q607B1067

Code 378 - DDC (4-20 ma) interface module for modulating damper motor, P/N 171134, M/H Q7230A

Special Manifold Components

Codes 410-423 - Illinois School Code, Option BM12 (applies to Model SCE Series 6 and Model SSCBL)

Code	Description	P/N
Components for Illinois School Code Manifold (Option BM12 is available on SCE Series 6 and SSCBL)		
410	Low Gas Pressure Switch, see page 26, Codes 325 or 326	
411	High Gas Pressure Switch, seee page 26, Code 327	
412	Vent Limiter, Maxitrol A1209, see page 26	
413	Pressure Switch Brackets	(3-7)**100261**
414	Manual Gas Valve (one per unit), page 9	
415	Manual Pilot Shutoff (one per unit), page 9	
416	Safety Solenoid Valve (one per unit)	**88242**
417	Pilot Valve (one per unit)	**25787**
418	Pilot Valve Bracket	**100262**
419	Relay SPDT	(2)**103317**
420	Relay SPST	**98118**
421	Pilot Regulator, Maxitrol 400S	**86965**
422	Switch Push Button (Alarm Silencing)	**110130**
423	Alarm Bell (Adaptable Edwards #340-465, 24V), see page 28.	**110131**

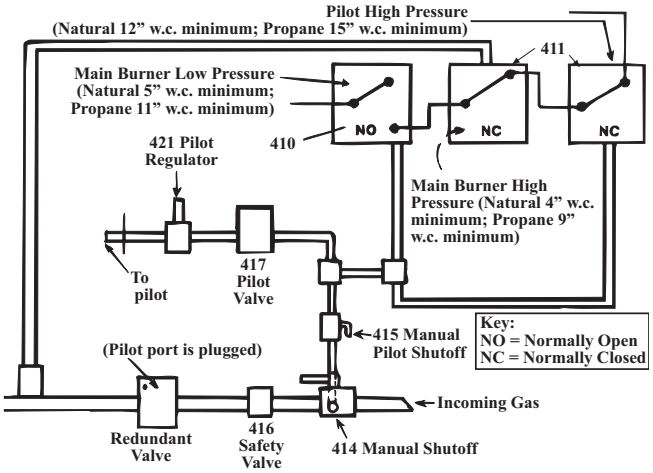

Codes 424-435 - IRI, Option BM13 (applies to Model SSCBL 1050 and 1200) - DISCONTINUED 9/2003

Code	Description	P/N	Code	Description	P/N
Components for IRI Manifold (Option BM13 is available on Model SSCBL 1050 and 1200) - not mfgd after 9/2003					
424	Fluid Power Valve	(2) **89356**	434	Transformer 230/460 to 115V, .5KVA	**86997**
	Fluid Power Valve Actuator	(2) **86993**		Transformer 208 to 115V, .5KVA	**86998**
425	Low Gas Pressure Switch, page 25, Codes 325 & 326			Transformer 208 to 115V, 250VA	**86991**
426	High Gas Pressure Switch, page 25, Code 327			Transformer 230/460/575 to 115V, 300VA	**105202**
427	Vent Limiter, Maxitrol A1209, page 25	(2)**123481**	435	Pilot Regulator	(3)**86965**
428	Vent Solenoid Valve	**86996**	436	Valve Box Top	**110194**
429	Pilot Valve (one per unit)	**25787**	437	Valve Box Inlet Side	**110195**
430	Manual Shutoff & Ball Valve Adapter, page 9		438	Valve Box Plain Side	**110196**
431	Pilot Manual Shutoff (one per unit), page 9		439	Valve Box Back	**110197**
432	RBM Relay	(4)**98118**	440	Top Door	**110198**
433	Pilot Valve Bracket	(2)**100262**	441	Bottom Door	**110199**

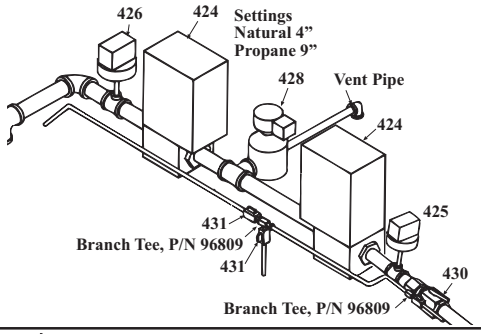

Code	Description	P/N
Components for FM Manifold (Option BM14 is available on Model SSCBL only)		
442	Fluid Power Valve	**89356**
	Fluid Power Valve Actuator	**86993**
443	Manual Shutoff and Ball Valve Adapter, page 9	
444	Pilot Manual Shutoff (one per unit), page 9	
445	Pilot Valve (one per furnace)	**25787**
446	Pilot Valve Bracket	**100262**
447	Pilot Regulator	**86965**
448	Transformer 230/460/575 to 115V, 300VA	**105202**
	Transformer 208 to 115V, 250VA	**86991**
449	Valve Box Top	**110211**
450	Valve Box Inlet Side	**110195**
451	Valve Box Plain Side	**110196**
452	Valve Box Back	**110212**
453	Top Door	**110213**
454	Bottom Door	**110214**

Codes 442-447 - FM, Option BM14 (applies to Model Series SSCBL)

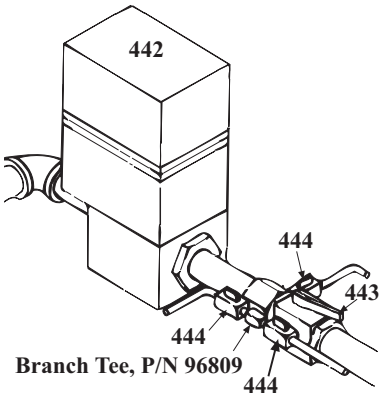

Codes 416, 417, 429, 445 - Solenoid Valve

1/4", P/N 25787
3/4", P/N 88242
1", P/N 112922

Code 418, 433, 446 - Pilot Valve Bracket in Options BM12, BM13, BM14, P/N 100262

Code 421, 447 - Pilot Regulator, Maxitrol R400S, P/N 86965

Springs for R400S Pilot Regulator

Maxitrol P/N	Color	Pressure Range	Approx Length
R400B10-13	Brown	1.0 to 3.5 (w.c.)	1-9/16 to 2"
R400B10-25	Cadmium Plate	2.0 to 5.0 (w.c.)	1-9/16 to 2"
R400B10-36	Cadmium Plate	3.0 to 6.0 (w.c.)	1-9/16 to 2"
R400B10-38	Pink	3.0 to 8.0 (w.c.)	1-9/16 to 2"

Codes 424 and 442

Valve only (used with actuator on the right)

P/N 86993 Actuator (M/H V4055A1007)

Size	Gas	Reznor P/N	M/H P/N
1"	N or P	**86992**	V5055A1004
1-1/4"	N or P	**89356**	V5055A1012
2"	N or P	**91079**	V5055A1038

Code 428 - Vent Valve, G/C #S262, P/N 86996

Specifications and illustrations subject to change without notice or incurring obligations.
Latest version of this manual is available at **www.reznorhvac.com**.
©2026 Reznor LLC, Saint Charles, MO. All rights reserved.
SCA-SCB-RPL (05-26) REV-A