REZNOR®

Revision: UBX-UDX-VENT (06-26) 1034631-B

Supersedes: UBX-UDX-VENTING (01-22) 1034631-A

VENTING INSTRUCTIONS FOR GAS-FIRED UNIT HEATERS

MODEL UBX: STANDARD POWER VENT BLOWER TYPE
MODEL UDX: STANDARD POWER VENT FAN TYPE

GENERAL INFORMATION

This manual applies only to venting instructions for model UBX and UDX unit heaters and must be used with the installation manual. Both manuals are provided with the heater. If either manual is missing, contact your distributor before beginning installation.When converting fuels, it is necessary to have the complete heater model. The identifying model number can be found on the heater rating plate. The rating plate identifies only original equipment, so also compare the label on the gas valve with the description listed.

Important Safety Information

Refer to the installation manual provided with the heater for important safety information. Pay attention to all dangers, warnings, cautions, and notes highlighted in this manual. Safety markings should not be ignored and are used frequently throughout to designate a degree or level of seriousness.

⚠ DANGER ⚠

- **Each Category III heater requires its own individual vent pipe run and vent cap. Manifolding of Category III vent runs can cause recirculation of combustion products into the building. Failure to comply could result in severe personal injury, death, and/or property damage.**
- **Heaters certified for residential use are intended for the heating of non-living spaces that are attached to or part of a structure that contains space for family living quarters. They are not intended to be the primary source of heat in residential applications or to be used in sleeping quarters.**
- **All gas conversion must be done by a qualified service person in accordance with these instructions and in compliance with all codes and requirements. In Canada, gas conversion shall be carried out in accordance with the requirements of the Provincial Authorities having jurisdiction and in accordance with the requirements of the CAN/CGA-B149.1 and CAN/CGA-B149.2 installation code.**
- **The gas burner in this gas-fired equipment is designed to provide safe complete combustion. However, if the installation does not permit the burner to receive the proper supply of combustion air, complete combustion may not occur. The result is incomplete combustion, which produces carbon monoxide, a poisonous gas that can cause death.**
- **Safe operation of indirect-fired gas burning equipment requires a properly-operating vent system that vents all flue products to the outside atmosphere. Failure to provide proper venting will result in a health hazard that could cause serious personal injury or death.**
- **For all heater installations, always comply with the combustion air requirements in the installation codes and instructions. Combustion air at the burner should be regulated only by manufacturer-provided equipment. Never restrict or otherwise alter the supply of combustion air to any heater. Maintain the vent or vent/combustion air system in structurally sound and proper operating condition.**
- **Improper installation, adjustment, alteration, service, or maintenance can cause property damage, injury, or death. Read the installation, operation and maintenance instructions thoroughly before installing or servicing this equipment.**
- **Installation should be performed by a qualified agency in accordance with these instructions. The qualified service agency installing this unit is responsible for the installation.**

DO NOT DESTROY. PLEASE READ CAREFULLY. KEEP IN A SAFE PLACE FOR FUTURE REFERENCE.

Important Safety Information—Continued

⚠ CAUTION ⚠

These units should not be used in an application where the heated space temperature is below 40°F (4°C). Operating under low ambient conditions may cause condensate to form in the heat exchanger.

Venting Requirements

- These unit heaters are certified for commercial/industrial installation. Model UDX heaters in unit sizes 030, 045, 060, 075, 100, and 125 are also certified for residential installation. Requirements and instructions vary depending on whether the installation is residential or commercial/industrial and whether the vent is dedicated or common. Select and follow the venting instructions that apply to the installation only.
- Venting must be in accordance with local codes and with the National Fuel Gas Code Z223.1 or CAN/CSA B149.1 and B149.2, Installation Code for Gas Burning Appliances and Equipment. Local requirements supersede national requirements.

⚠ CAUTION ⚠

- **When an existing appliance is removed or replaced in a venting system, verify that the venting system is properly sized to vent the new appliance. An improperly sized venting system may result in the formation of condensate, leakage, and/or spillage.**
- **Do not intermix different vent system parts from different manufacturers in the same venting system.**
- **Do not vent into an existing gravity vent or chimney.**

Venter (Flue) Outlet Diameter

- Depending on the size of vent pipe, either attach the vent pipe directly to the collar or to a taper-type connector.
- For Category III vent pipe, attach a 4-inch appliance adapter (available from the Category III pipe manufacturer) directly to the collar and then then use a reducer if using 3-inch pipe.
- Refer to **Table 1** for venter (flue) outlet diameters.

Table 1. Venter (Flue) Outlet Diameter

Unit Size		
030–125	**150–250**	**300, 350, 400**
Inches (mm)		
4 (102)*	5 (127)	6 (152)

*Unit size 100 requires a 5-inch (127-mm) vent when vented as Category I.

Condensation Mitigation

- On units with long vent runs—over 50% of maximum vent length allowed—or installed in low ambient conditions (below 50°F), it is recommended that vent pipes be fitted at the low point of the vent system with a tee, a drip leg, and a cleanout cap to prevent any moisture in the vent pipe from entering the unit. The drip leg should be inspected and cleaned out periodically during the heating season.
- Any length of single-wall vent pipe exposed to cold air or run through an unheated area or an area with an ambient temperature of 50°F or less, must be insulated along its entire length with a minimum of 1/2-inch foil-faced fiberglass, 1-1/2# density insulation.
- On horizontal vent runs, the flue pipe must be pitched down toward the terminal end—1/4-inch per foot for condensate drainage—for the entire length of the horizontal vent run.

⚠ CAUTION ⚠

- **Failure to pitch the vent run properly may damage the heater due to condensate running back into the unit.**
- **Exceeding vent pipe diameter and length requirements may result in condensate forming in the vent pipe.**

Vent System Support Requirements

- Support horizontal runs every 6 feet (1.8 meters).
- Support vertical runs—of Type B double-wall, Category I, or Category III vent pipe—in accordance with the pipe manufacturer's requirements.
- Support single-wall pipe in accordance with accepted industry practice.

⚠ CAUTION ⚠

- **Do not rely on the heater to support either horizontal or vertical vent pipe.**
- **Use non-combustible supports on vent pipe.**

Vent System Sealing

Vent system joints depend on the type of pipe being used:

- **Category III pipe:** follow manufacturer's instructions for joining pipe sections—connect venter outlet or the vent cap using secure, sealed joints that follow a procedure best suited to the style of Category III pipe being used.
- **Single-wall galvanized pipe (26-gauge or heavier):** secure slip-fit connections using sheet metal screws or rivets—seal all joints and seams inside the building using aluminum tape or silicone sealant.
- **For Category I vents:** when connecting Type B double-wall pipe to single-wall pipe or to the vent collar, use an adapter made by the Type B double-wall pipe manufacturer for that purpose and follow the Type B double-wall pipe manufacturer's instructions.
- **Double-wall Type B vent pipe:** join pipe sections in accordance with the pipe manufacturer's requirement—refer to the illustrated instructions in **Figure 1** to connect double-wall pipe to the heater collar, single-wall pipe, and vent cap. Work quickly to assemble components before sealant dries.

Vent System Sealing—Continued

STEP 1: Place continual 1/4-inch bead of silicone sealant around circumference of single-wall pipe.

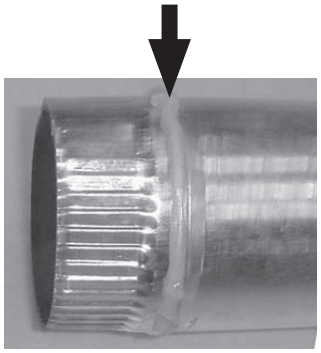

STEP 2: Before sealant can dry, insert single-wall pipe into inner pipe of double-wall pipe until bead of sealant contacts inner pipe to create sealed joint.

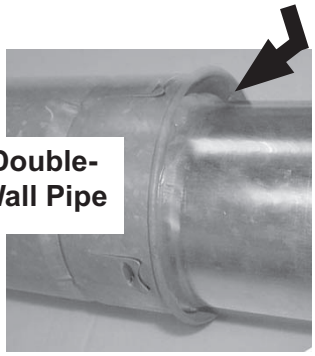

STEP 3: Drill three small holes spaced equally around double-wall pipe below sealant ring. Secure joint using 3/4-inch-long sheet metal screws. Do not overtighten screws.

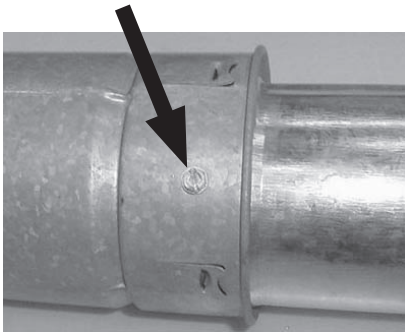

STEP 4: Place continual 3/8-inch bead of silicone sealant around he circumference of vent cap collar to prevent any water inside vent cap from running down double-wall pipe.

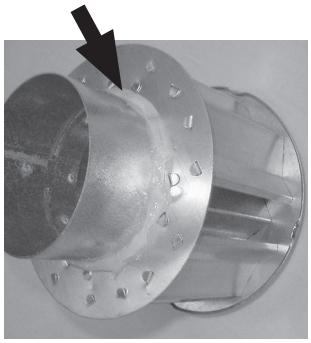

STEP 5: Before sealant can dry, insert collar on vent cap as far as possible inside inner wall of double-wall pipe. Apply silicone sealant to fully close any gaps between vent cap and double-wall pipe to prevent water from entering double-wall pipe.

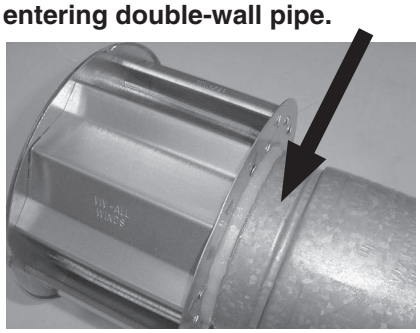

STEP 6: Drill small hole through vent cap and double-wall pipe. Secure joint using 3/4-inch-long sheet metal screw. Do not overtighten screw.

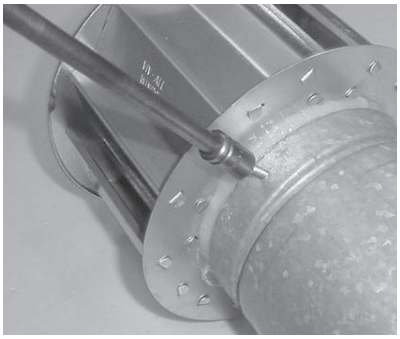

STEP 7: Place continual 1/4-inch bead of silicone sealant around circumference of venter outlet collar.

STEP 8: Before sealant can dry, slide double-wall pipe over collar so that collar is inside inner pipe. Push double-wall pipe tight to heater cabinet. Drill three small holes through the pipe and into collar spaced equally around pipe below sealant ring. Secure joint using 3/4-inch-long sheet metal screws. Do not overtighten screws.

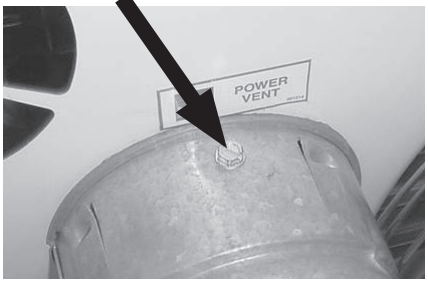

Figure 1. Instructions for Attaching Double-Wall Type B Vent Pipe to Single-Wall Pipe

Vent Terminal (Type of Pipe and Vent Cap) Requirements

⚠ DANGER ⚠

- **To prevent combustion products from entering the occupied space, all vent terminations must be positioned or located away from fresh air intakes, doors, and windows. Failure to comply could result in severe personal injury or death and/or property damage.**
- **Consider local snow depth conditions. The vent must be at least 6 inches (152 mm) above the anticipated snow depth.**

⚠ WARNING ⚠

- **A different style vent cap could cause nuisance problems or unsafe conditions. The vent cap must be the same size as the vent pipe.**
- **Do not locate a vent termination where it may cause hazardous frost or ice accumulations on adjacent property surfaces.**
- **Maintain the required clearance from the wall to the vent terminal cap for stability under wind conditions and to protect the building.**

NOTE: Products of combustion can cause discoloration of some building finishes and deterioration of masonry materials. Applying a clear silicone sealant that is normally used to protect concrete driveways can protect masonry materials. If discoloration is an esthetic problem, relocate the vent or install a vertical vent.

- For Category I vents:
  a. Where the vent extends through the roof, a clearance thimble is required when the flue pipe extends through combustible materials. Follow the requirements of the double-wall pipe manufacturer.
  b. Maintain a 6-inch (152-mm) clearance between a single-wall vent pipe and combustibles.
  c. For Type B double-wall vent pipe, follow the pipe manufacturer's recommendations for clearance to combustibles.
- For Category III vents, refer to **Table 2** for horizontal vent terminals.
- Vertical vents must terminate a minimum horizontal and vertical distance from roof lines and adjacent walls or obstructions. These minimum distances are outlined as follows (based on National Fuel Gas Code requirements for vents with diameters less than 12 inches):
  a. For double-wall vent pipe and a horizontal distance to any vertical wall or similar obstruction of 8 feet or greater, the vent must terminate above the roof in accordance with **Figure 2** and **Table 3**.
  b. For double wall vent pipe and a horizontal distance to any vertical wall or similar obstruction of less than 8 feet, the vent must terminate at least 2 feet above the highest point where it passes through a roof of a building and at least 2 feet higher than any portion of a building within a horizontal distance of 10 feet (refer to **Table 3**).

Vent Terminal (Type of Pipe and Vent Cap) Requirements—Continued

Table 2. Minimum Clearance Requirements for Category III Horizontal Vent Terminal	
Component/Structure	**Minimum Clearance, All Directions Unless Specified (Feet (Meters))**
Forced air inlet within 10 feet (3.1 meters)*	3 (0.9) above
Combustion air inlet of another appliance	6 (1.8)
Mechanical air supply inlet to any building	Canada: 6 (1.8)
Any building opening (door, window, or gravity air inlet)	4 (1.2) horizontal and below
	1 (0.3) above
Gas meter,** electric meter, and relief equipment	US: 4 (1.2) horizontal
	Canada: 6 (1.8) horizontal
Gas regulator**	US: 3 (0.9) horizontal
	Canada: 6 (1.8) horizontal
Adjoining building or parapet	6 (1.8)
Adjacent public walkway	7 (2.1) above
Grade (ground level)	3 (0.9) above
*Does not apply to the inlet of a direct vent appliance.	
**Do not terminate the vent directly above a gas meter or service regulator.	

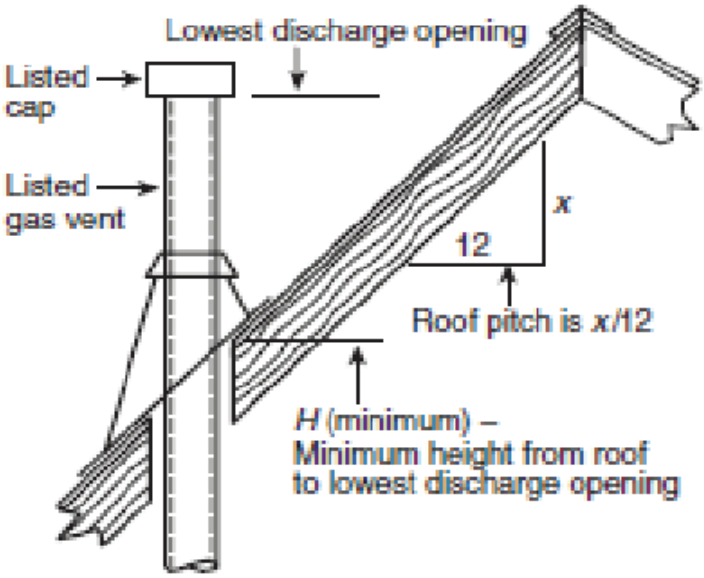

Figure 2. Roof Slope and Pitch

Table 3. Vent Termination Height											
Roof Slope											
Flat to 6/12	**Over 6/12–7/12**	**Over 7/12–8/12**	**Over 8/12–9/12**	**Over 9/12–10/12**	**Over 10/12–11/12**	**Over 11/12–12/12**	**Over 12/12–14/12**	**Over 14/12–16/12**	**Over 16/12–18/12**	**Over 18/12–20/12**	**Over 20/12–21/12**
Dimension H (Feet (Meters))*											
1.0 (0.30)	1.25 (0.38)	1.5 (0.46)	2.0 (0.61)	2.5 (0.76)	3.25 (0.99)	4.0 (1.22)	5.0 (1.52)	6.0 (1.83)	7.0 (2.13)	7.5 (2.27)	8.0 (2.44)
*See **Figure 2**. Termination locations for gas vents with listed caps 12 inches (300 mm) or less in size at least 8 inches (2.4 meters) from a vertical wall.											

INSTALLATION

Installation instructions vary depending on the installation type: Category III venting (most installations) or Category I, commercial/industrial or residential locations, and vent configuration—common or not. See **Figure 3** to determine the installation type and refer to the following subparagraphs for instructions.

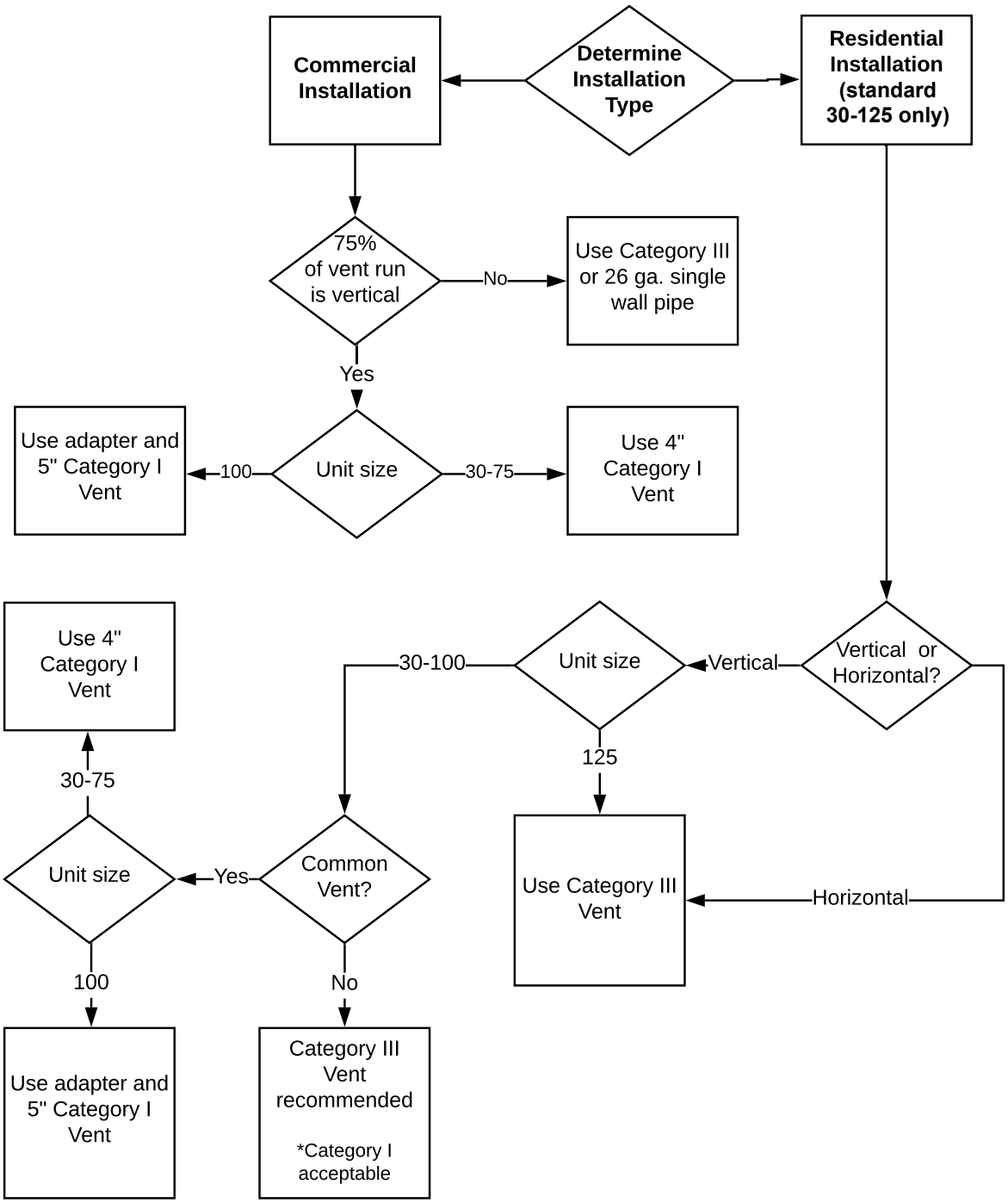

Figure 3. Installation Flowchart

Category III Venting

Refer to **Table 4** for a list of Category III vent manufacturers. Refer to **Table 5** for required Category III pipe sizes.

Table 4. Category III Vent Manufacturers

Manufacturer	Model(s)	Diameter (Inches)
CaptiveAire Systems	2V-Type BH	—
Cheminee Lining E Inc.	IPP, HEP, HEPL, HEPLA, HEPL1, and HEPL2	6–48
Cleaver-Brooks Inc.	CBH, CBHL, CBHL2, CBHLA, and CBHL1	
DuraVent Inc.	FasNSeal fixed blade damper assembly	4–18 (ID)
	FasNseal special gas vent assembly	—
	FasNSeal W2 special gas vent system	
	FasNSmooth chimney liner system for use in masonry chimneys only	
	FasNSeal CVS special gas vent system and direct vented pellet system	
	S-Vent and PVP	4 and 5
ENERVEX Inc.	EPS and EPS-1	4–48
ECCO Manufacturing Division of ECCO Heating Products Ltd.	SGDW series	3–6
ICC Industrial Chimney Co.	VIC	4–24
Industrial Combustion LLC	ICH, ICHL, ICHLA, ICHL1, and ICHL2	4–48
Jeremias Inc.	DWKL, SWKL, DWFL, and SWFL	4–36
	DWGV double-wall, air-insulated, 1 inch between inner and outer pipe diameter	—
	DWGV1 double-wall, fiber-insulated, 1 inch between inner and outer pipe diameter	
	DWGV2 double-wall, fiber-insulated, 2 inches between inner and outer pipe diameter	
	SWGV single-wall	4–12
Lifetime Chimney Supply LLC	Xi1, Xi2, and Xi4	5
METAL-FAB Inc.	CGSW, FCSSW, CG, FCS, FCG-1, and FCS-1	6–24 (ID)
	FCGSW, FCG, FCG-1, FCS-3 CORR/GUARD, and FCS-2 CORR/GUARD	6–36 (ID)
	CGSW, CG, FCG, 3CGSWHVK, and 4CGSWHVK	4 and 5
Noritz America Corporation	N-Vent	4 and 5
Rheem Sales Co. Inc.	RTG	3
Security Chimneys International Ltd.	Secure Seal Flex chimney lining system	3–12
Selkirk Corporation	Saf-T-CI and Saf-T C1	4, 5, and 6
	Saf-T-Vent	3–6 and 8
	EZ Seal	3–6
	SGV	3, 4, and 5
	CI Plus	6 and 8
	SC, DGV, EZ Seal Quick Kit, Sel-Vent, and Sel-Vent II	4
	IPS316, PS316, and G316	5 and 6
SFL Flue & Chimney	DEVON EPS and EPS-1	4–6
The Schebler Co.	SSD, ESW, eVent, and eVent PLUS	2 and 4–6
	eVent SD	4–6
Sunair Products	SADW-2V and SADW-V	4
Tokyo Gas Renovation Co. Ltd.	KP and KC	4 and 5
	N-Vent	3, 4, and 5
Van-Packer Co. Inc.	MW, CS, and CSplus	4–6 (ID)
Z-FLEX US Inc.	SVE and SVEII	3 and 4
	SVEIII	2, 3, and 4
	SVEIV single-wall and SVEIV double-wall	4, 5, and 6
	NovaVent single-wall and NovaVent double-wall	
	Z-VentBlu single-wall and Z-VentBlu double-wall	3, 4, and 5

Table 5. Category III Vent (Horizontal or Vertical) Pipe Diameters and Lengths					
Unit Size	Vent Pipe Diameter (Inches (mm))	Maximum Vent Length	Equivalent Straight Length*		Venter Outlet Connection**
			90-Degree Elbow	45-Degree Elbow	
		Feet (Meters)			
030	3 (76)	20 (6.1)	3 (0.9)	1.5 (0.5)	4- to 3-inch (102- to 76-mm) reducer
	4 (102)	10 (3)	2 (0.6)	1 (0.3)	—
045	3 (76)	20 (6.1)	3 (0.9)	1.5 (0.5)	4- to 3-inch (102- to 76-mm) reducer
	4 (102)	10 (3)	2 (0.6)	1 (0.3)	—
060	3 (76)	30 (9.1)	4 (1.2)	2 (0.6)	4- to 3-inch (102- to 76-mm) reducer
	4 (102)	15 (4.6)	2 (0.6)	1 (0.3)	—
075	4 (102)	30 (9.1)	4 (1.2)	2 (0.6)	—
100	4 (102)	40 (12.2)	5 (1.5)	2.5 (0.8)	—
125	4 (102)	40 (12.2)	5 (1.5)	2.5 (0.8)	—
150	5 (127)	35 (10.7)	5 (1.5)	2.5 (0.8)	—
175	5 (127)	35 (10.7)	5 (1.5)	2.5 (0.8)	—
200	5 (127)	50 (15.2)	5 (1.5)	2.5 (0.8)	—
225	5 (127)	50 (15.2)	5 (1.5)	2.5 (0.8)	—
250	5 (127)	50 (15.2)	5 (1.5)	2.5 (0.8)	—
300	6 (152)	50 (15.2)	5 (1.5)	2.5 (0.8)	—
350	6 (152)	50 (15.2)	7 (2.1)	3.5 (1.1)	—
	7 (178)	50 (15.2)	4.5 (1.4)	2.25 (0.7)	6- to 7-inch (152- to 178-mm) enlarger
400	6 (152)	50 (15.2)	8 (2.4)	4 (1.2)	—
	7 (178)	50 (15.2)	5 (1.5)	2.5 (0.8)	6- to 7-inch (152- to 178-mm) enlarger
*Add all straight sections and equivalent lengths for elbows—the total combined length must not exceed the maximum vent length.					
**Field-supplied taper-type connection required at the venter outlet.					

Category III Commercial/Industrial Installations (Model UBX or UDX, All Unit Sizes)

A commercial/industrial installation may have either a horizontal or a vertical vent run. Install vent as follows:

1. Select vent pipe (refer to **Table 4**):
   a. For either horizontal or vertical vent run, select vent pipe approved to UL standard 1738 for Category III appliance or appropriately-sealed 26-gauge or heavier galvanized steel or equivalent single-wall pipe.
   b. If at least 75% of equivalent length of the vent run is vertical, select double-wall Type B vent pipe. If connecting double-wall pipe to heater, follow instructions in **Figure 1**.
2. Determine vent pipe diameter and length:
   a. Minimum vent length is 3 feet (1 meter).
   b. Use only one diameter of vent pipe for installation (refer to **Table 5**).
3. Determine venter (flue) outlet diameter (refer to **Venter (Flue) Outlet Diameter** section).
4. Make all vent pipe joint connections in accordance with **Vent System Sealing** section.
5. Support all vent pipe runs in accordance with **Vent System Support Requirements** section.
6. Take appropriate steps to mitigate condensation in accordance with **Condensation Mitigation** section.

NOTE: Ensure that terminal vent pipe is double-wall Type B pipe.

7. Terminate vent as follows:
   a. Install double-wall Type B terminal vent pipe (connect in accordance with **Figure 1**) and terminate vent with option CC1 or CC21 vent cap or approved Category III vent cap.
   b. Refer to instructions shown in **Figure 4** to install horizontal vent terminal.
   c. Refer to instructions shown in **Figure 5** to install vertical vent terminal.
   d. Ensure that vent terminal is installed in accordance with **Vent Terminal (Type of Pipe and Vent Cap) Requirements** section.

Category III Venting—Continued

Category III Commercial/Industrial Installations (Model UBX or UDX, All Unit Sizes)—Continued

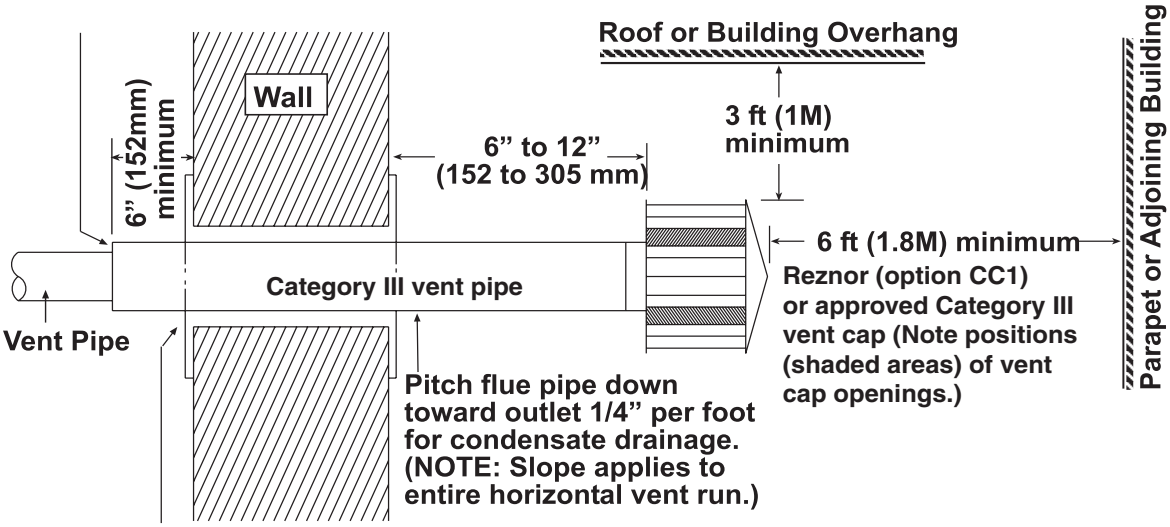

Approved clearance thimble is required when flue pipe extends through combustible materials. Follow the requirements of the thimble and/or the vent pipe manufacturer.

Figure 4. Horizontal Vent Terminal (Commercial/Industrial Installations)

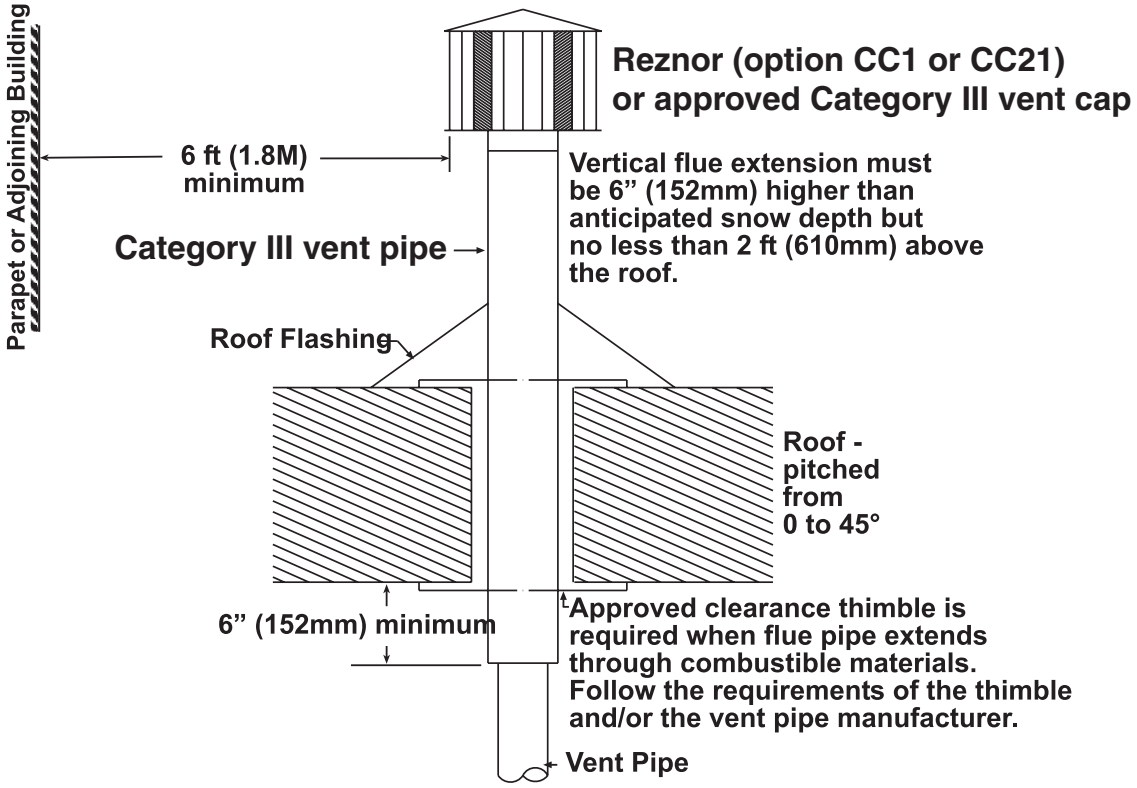

Figure 5. Vertical Vent Terminal (Commercial/Industrial Installations)

Category III Residential Installations (Model UDX, Unit Sizes 030, 045, 060, 075, 100, 125)

A Category III dedicated vent as defined by the National Fuel Gas Code Z223.1 or CAN/CSA B149.1 and B149.2 is required for a residential installation of model UDX units. Some venting requirements will vary, however, depending on whether the vent is horizontal or vertical. Install vent as follows:

1. Select vent pipe (refer to **Table 4**) approved to UL standard 1738 for Category III appliance for either horizontal or vertical vent run.
2. Determine vent pipe diameter and length:
   a. Minimum vent length is 3 feet (1 meter).
   b. Use only one diameter of vent pipe for installation (refer to **Table 5**).
3. Determine venter (flue) outlet diameter (refer to **Venter (Flue) Outlet Diameter** section).
4. Make all vent pipe joint connections in accordance with **Vent System Sealing** section.
5. Support all vent pipe runs in accordance with **Vent System Support Requirements** section.
6. Take appropriate steps to mitigate condensation in accordance with **Condensation Mitigation** section.
7. Terminate vent as follows:
   a. Install UL standard 1738 approved Category III vent pipe and terminate vent with option CC1 or CC21 vent cap or approved Category III vent cap.
   b. Refer to instructions shown in **Figure 6** and to **Table 2** to install horizontal vent terminal.

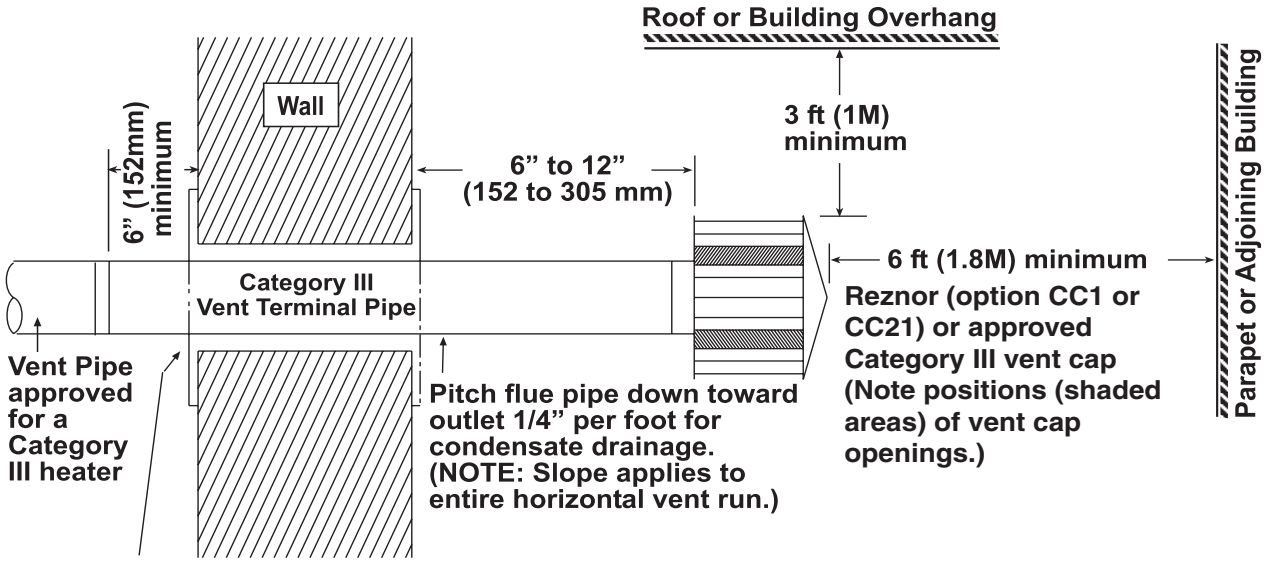

Approved clearance thimble is required when the flue pipe extends through combustible materials. Follow the requirements of the thimble and/or Category III vent pipe manufacturer.

Figure 6. Horizontal Vent Terminal (Residential Installations)

   c. Refer to instructions shown in **Figure 7** to install vertical vent terminal.
   d. Ensure that vent terminal is installed in accordance with **Vent Terminal (Type of Pipe and Vent Cap) Requirements** section.

Category III Venting—Continued

Category III Residential Installations (Model UDX, Unit Sizes 030, 045, 060, 075, 100, 125)—Continued

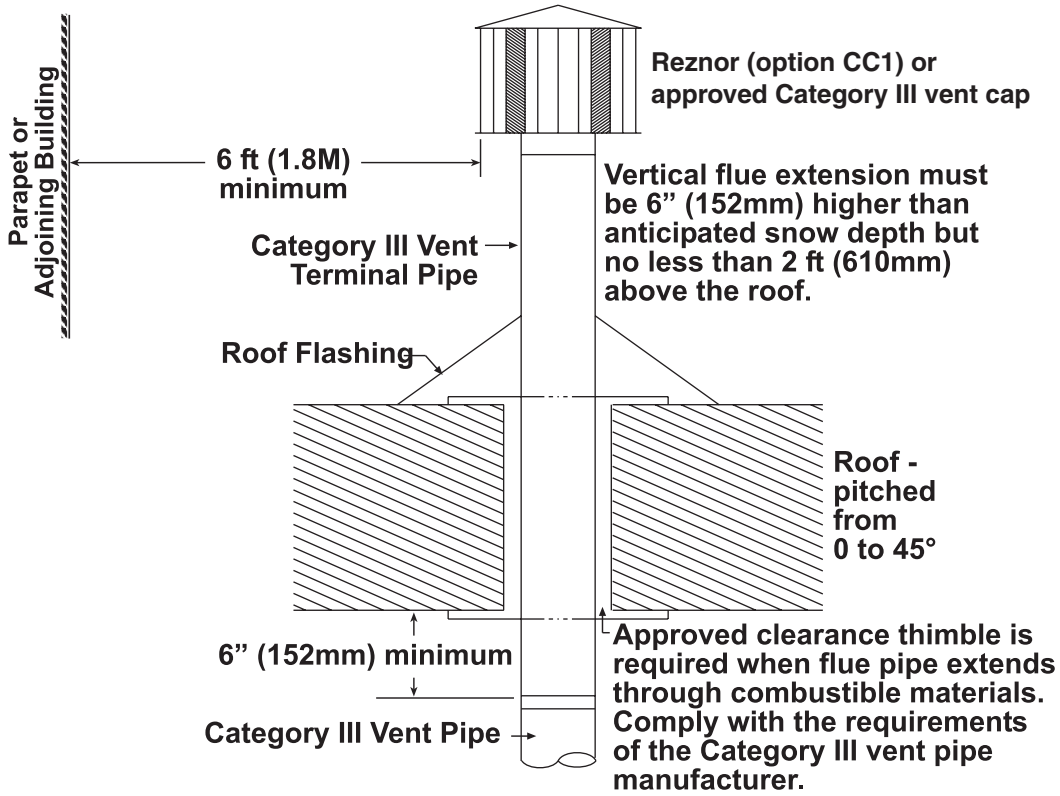

Figure 7. Vertical Vent Terminal (Residential Installations)

Category I Venting

Category I venting is used for some model UDX units with either a dedicated vent or a common (with another appliance) vent.

Category I Commercial/Industrial or Residential Installations with Vertical Dedicated Vent (Model UDX, Unit Sizes 030, 045, 060, 075, 100)

On vent systems where at least 75% of the equivalent length of the vent run is vertical and the vent terminates at least 5 feet above the vent outlet of the heater. All vertically vented heaters that are Category I must be connected to a chimney or vent complying with a recognized standard or a lined masonry (or concrete) chimney with a material acceptable to the authority having jurisdiction. Venting into an unlined masonry chimney is not permitted. Install vent as follows:

1. Select type of pipe for standard vertical (Category I) vent. Double-wall vent pipe is recommended. Use single-wall vent pipe if requirements of the National Fuel Gas Code are followed.
2. Determine vent pipe diameter and length for vertical vent.
   a. Unit sizes 030–075 require 4-inch vent.
   b. Unit size 100 requires 4- to 5-inch adapter and 5-inch pipe.
3. Determine venter (flue) outlet diameter (refer to **Venter (Flue) Outlet Diameter** section).
4. Make all vent pipe joint connections in accordance with **Vent System Sealing** section.
5. Support all vent pipe runs in accordance with **Vent System Support Requirements** section.
6. Take appropriate steps to mitigate condensation in accordance with **Condensation Mitigation** section.

7. Terminate vent as follows:
   a. Install UL listed Category I terminal vent pipe and terminate vent with option CC1 or CC21 vent cap or Novavent #2NVTB4 vent cap.
   b. Refer to instructions shown in **Figure 5** to install vertical vent terminal.
   c. Ensure that vent terminal is installed in accordance with **Vent Terminal (Type of Pipe and Vent Cap) Requirements** section.

Category I Residential Installations with Dedicated Vent (Model UDX, Unit Sizes 030, 045, 060, 075, 100)

1. Select vent pipe and vent connector for Category I vent (see **Figure 8**).
2. Determine vent pipe diameter and length in accordance with **Table 6**.
3. Determine venter (flue) outlet diameter (refer to **Venter (Flue) Outlet Diameter** section).
4. Make all vent pipe joint connections in accordance with **Vent System Sealing** section.
5. Support all vent pipe runs in accordance with **Vent System Support Requirements** section.
6. Take appropriate steps to mitigate condensation in accordance with **Condensation Mitigation** section.
7. Terminate vent with option CC1 vent cap. Ensure that vent terminal is installed in accordance with **Vent Terminal (Type of Pipe and Vent Cap) Requirements** section.

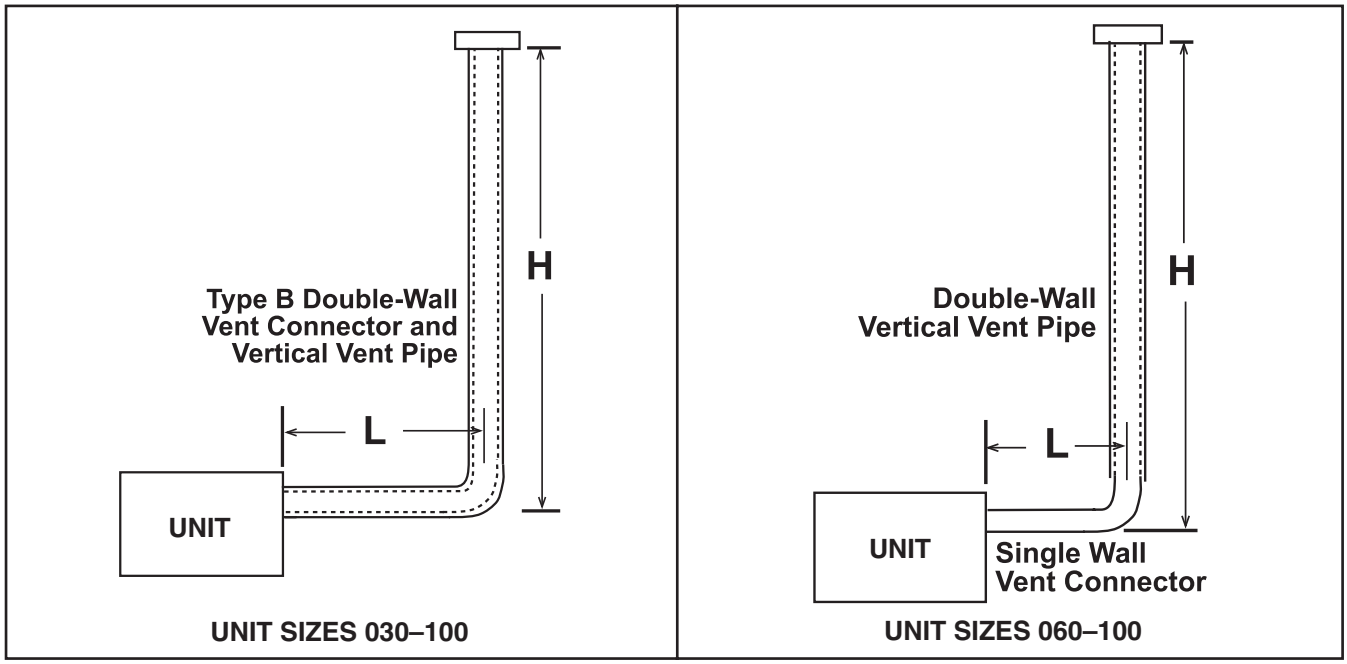

Figure 8. Typical Category I Dedicated Vent

Category I Venting—Continued

Category I Residential Installations with Dedicated Vent (Model UDX, Unit Sizes 030, 045, 060, 075, 100)—Continued

Table 6. Category I Vent Pipe Diameters and Lengths

UDX Unit Size	Vent Pipe Diameter (Inches (mm))	With Double-Wall Connector		With Single-Wall Connector	
		Dimension (See Figure 8)			
		H	L	H	L
		Feet (Meters)			
030	4 (102)	6 (1.8)	4 (1.2)	—	
		10 (3.0)	2 (0.6)		
		15 (4.6)	5 (1.5)		
		20 (6.1)			
045	4 (102)	6 (1.8)			
		8 (2.4)			
		10 (3.0)	5 (1.5)		
		15 (4.6)			
		20 (6.1)			
060	4 (102)	6 (1.8)		6 (1.8)	2 (0.6)
		8 (2.4)		8 (2.4)	
		10 (3.0)		10 (3.0)	
		15 (4.6)		15 (4.6)	
		20 (6.1)		20 (6.1)	
075	4 (102)	6 (1.8)		6 (1.8)	2 (0.6)
		8 (2.4)		8 (2.4)	4 (1.2)
		10 (3.0)		10 (3.0)	
		15 (4.6)		15 (4.6)	5 (1.5)
		20 (6.1)		20 (6.1)	
100	5 (127)	6 (1.8)		6 (1.8)	4 (1.2)
		8 (2.4)		8 (2.4)	
		10 (3.0)		10 (3.0)	5 (1.5)
		15 (4.6)		15 (4.6)	
		20 (6.1)		20 (6.1)	
		30 (9.1)		—	

Category I Residential Installations with Common Vent (Model UDX, Unit Sizes 030, 045, 060, 075, 100)

⚠ DANGER ⚠

The installer must comply with the venting requirements listed in this section, with the instructions provided for other appliances that are to be commonly vented with the unit, and with applicable local codes. Verify that any appliances being commonly vented with the unit are designed for Category I common venting. Failure to comply may result in severe injury, death, and/or property damage.

Model UDX unit sizes 030–100 may be used in a Category I common venting application. Common venting is when two or more Category I appliances are vented into a single vertical vent. **Figure 9** shows typical common vent configurations for a Type B double-wall common vent or a Type B double-wall lined masonry chimney. Install vent as follows:

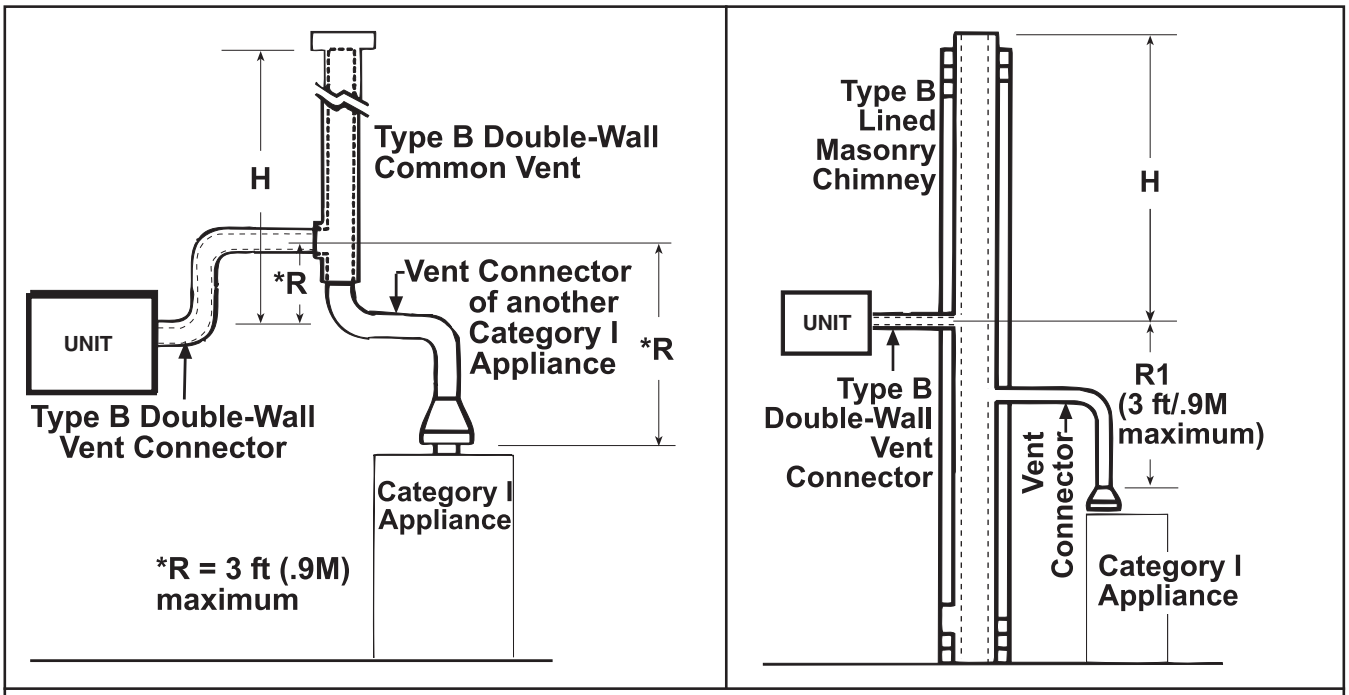

H = COMMON VENT HEIGHT = VERTICAL DISTANCE FROM HIGHEST DRAFT HOOD OUTLET OR FLUE COLLAR TO VENT CAP OR CHIMNEY OUTLET OF COMMON VENT

R = VENT CONNECTOR RISE = VERTICAL DISTANCE FROM EACH HEATER OR APPLIANCE OUTLET TO CENTER LINE WHERE VENT GAS STREAMS COME TOGETHER (3 FEET (0.9 METER) MAXIMUM)

VENT CONNECTOR = HORIZONTAL LENGTH OF VENT PIPE BETWEEN EACH APPLIANCE AND VERTICAL COMMON VENT

Figure 9. Typical Category I Common Vent

1. Select vent pipe and vent connector for Category I vent (see **Figure 9**).
2. Determine vertical height of vent based on vent capacity in accordance with **Table 7**.

NOTE: Table 7 applies to Type B double-wall common vents including lined masonry chimneys. If a conflict in capacity occurs with other instructions, the more conservative capacity must be chosen.

Table 7. Category I Common Vent Capacity

Vent Height (Feet (Meters))	Type B Double-Wall Common Vertical Vent Diameter (Inches (mm))					
	5 (127)		6 (152)		7 (178)	
	FAN + FAN*	FAN + NAT*	FAN + FAN*	FAN + NAT*	FAN + FAN*	FAN + NAT*
	Maximum Combined Input Rating of Appliances (mbh)					
6 (1.8)	—	102	180	142	274	220
7 (2.1)	—	108	188	149	286	231
8 (2.4)	147	113	196	156	298	242
10 (3.0)	170	123	213	170	321	263
15 (4.6)	187	143	248	199	374	309
20 (6.1)	212	159	275	222	417	345
30 (9.1)	241	182	315	257	480	401

FAN* refers to fan-assisted appliances and ***NAT* refers to appliances that rely solely on the natural buoyancy of the vent gases for venting.

Category I Venting—Continued

Category I Residential Installations with Common Vent (Model UDX, Unit Sizes 030, 045, 060, 075, 100)—Continued

3. Determine maximum length of horizontal connector pipe in accordance with **Table 8**.

NOTE: When two or more vent connectors enter a common vent, the smaller connector shall enter at the highest level consistent with available headroom or clearances to combustible material.

4. Determine venter (flue) outlet diameter (refer to **Venter (Flue) Outlet Diameter** section).
5. Make all vent pipe joint connections in accordance with **Vent System Sealing** section.
6. Support all vent pipe runs in accordance with **Vent System Support Requirements** section.
7. Take appropriate steps to mitigate condensation in accordance with **Condensation Mitigation** section.
8. Terminate vent with option CC1 vent cap. Ensure that vent terminal is installed in accordance with **Vent Terminal (Type of Pipe and Vent Cap) Requirements** section.

Table 8. Maximum Length of Category I Horizontal Connector Pipe

Vertical Vent Height (Feet (Meters))	With Single-Wall Connector					With Double-Wall Connector				
	UDX Unit Size									
	030	045	060	075	100	030	045	060	075	100
	Vent Connector Diameter (Inches (mm))									
	4 (102)				5 (127)	4 (102)				5 (127)
	Pipe Length (Feet (Meters))									
6 (1.8)	0 (0)		2 (0.6)	3 (0.9)		2 (0.6)				3 (0.9)
7 (2.1)	2 (0.6)			3 (0.9)		3 (0.9)				4 (1.2)
8 (2.4)	3 (0.9)					4 (1.2)				5 (1.5)
10 (3.0)	3 (0.9)	4 (1.2)				5 (1.5)				6 (1.8)
15 (4.6)	3 (0.9)	4 (1.2)	5 (1.5)		6 (1.8)	5 (1.5)		6 (1.8)		7.5 (2.3)
20 (6.1)	3 (0.9)	4 (1.2)	5 (1.5)		6 (1.8)	5 (1.5)	6 (1.8)			7.5 (2.3)
30 (9.1)	3 (0.9)	4 (1.2)	5 (1.5)		6 (1.8)	5 (1.5)	6 (1.8)			7.5 (2.3)

NOTE: For the proper vent connector length and diameter of other appliances connected in common with the unit, refer to the appliance manufacturer's instructions or to the National Fuel Gas Code.

Intertek

Specifications and illustrations subject to change without notice or incurring obligations.
Latest version of this manual is available at **www.reznorhvac.com**.
©2026 Reznor LLC, Saint Charles, MO. All rights reserved.
UBX-UDX-VENT (06-26) 1034631-B