REZNOR®

Revision: HRPD-TSL (10-26) REV-H

Supersedes: HRPD-TSL (04-26) REV-G

TECHNICAL SPECIFICATIONS FOR MODEL HRPD

OUTDOOR COMMERCIAL/INDUSTRIAL POWER-VENTED GAS-FIRED DUAL DUCT FURNACE



Table of Contents

Unit Sizes . . . 2
Features . . . 2
Factory-Installed Options . . . 2
Field-Installed Options . . . 3
Technical Data . . . 3
Certification . . . 4
Installation Codes . . . 4
Unit Location . . . 4
Combustion Air Requirements . . . 4
Halogenated Hydrocarbons . . . 4
Venting Requirements . . . 5
Ductwork Requirements . . . 5
Clearances . . . 5
Weights . . . 5
Dimensions . . . 6
Duct Furnace Airflow . . . 7

In keeping with our policy of continuous product improvement, we reserve the right to alter, at any time, the design, construction, dimensions, weights, etc., of equipment information shown here.

TECHNICAL SPECIFICATIONS—CONTINUED

Unit Sizes

These dual duct furnaces (consists of two model RP furnaces) are available in eight unit sizes based on 250,000–800,000 BTUh input.

Features

- Voltage/phase/Hz options: 115/1/60, 208/1/60, 230/1/60, and 460/1/60
- Natural gas or propane
- 80% thermal efficient
- Intermittent spark pilot
- Corrosion-resistant Galvalume® cabinet with interlocking joints and mounting rails for outdoor mounting
- Aluminized-steel burner with stainless steel insert
- Thermocore® aluminized-steel heat exchanger with venturi tubes (when inlet air temperature or temperature rise is <40°F, optional stainless steel heat exchanger is recommended)
- Fan control, high limit safety control, and venter pressure switch that verifies power-vent flow for gas valve operation
- Power venter provides metered combustion air, dilutes flue products, and eliminates need for vent caps
- May be packaged with blower unit
- Curb cap base
- 24V control transformer (designed for field-connection to 24V thermostat for automatic operation)

Factory-Installed Options

Option	Description
AA1	Natural gas
AA2	Propane
AB1	Installation elevation of 0–2000 feet
AB2	Installation elevation of 2001–3000 feet
AB3	Installation elevation of 3001–4000 feet
AB4	Installation elevation of 4001–5000 feet
AB5	Installation elevation of 5001–6000 feet
AB6	Installation elevation of 6001–7000 feet
AC1	Aluminized-steel heat exchanger
AC2	Stainless steel heat exchanger
AD1	Aluminized-steel burner
AD2	Stainless steel burner
AE1	No burner air shutters
AE2	Burner air shutters (required on propane units)
AF1	Aluminized-steel drip pan/bottom panel
AF2	Stainless steel drip pan/bottom panel
AGA	US installation rating plate
AG1	Single-stage combination gas valves
AG2	Two-stage combination gas valves
AG3	Two-stage combination gas valves with unit-mounted ductstats
AG8	Electronic modulation with ductstat
AG15	Four-stage operation with electronic ductstat and remote temperature selector
AG21	Electronic modulation with Maxitrol signal conditioner (natural gas units)
AG42	Electronic modulation with Maxitrol signal conditioner
AH2	Intermittent spark pilot (not available on propane units)
AH3	Intermittent spark pilot with timed lockout
AJ1	Left side controls (facing airstream)
AJ2	Right side controls (facing airstream)

Option	Description
AK1	115/1/60 voltage
AK2	208/1/60 voltage
AK3	230/1/60 voltage
AK9	460/1/60 voltage
BG3A–BG3Z	Various relay options
BH2	Time-delay relay
BP4	High- and low-pressure gas pressure safety switches
BW1	Air flow pressure proving switch
CGA	Canadian installation rating plate

Field-Installed Options

Option	Description
AG7	Electronic modulation with room thermostat
AG9	Electronic modulation with ductstat and remote temperature selector
CC3	Vertical vent kit
CL1	Single-stage thermostat
CL9	Electronic modulating room override
CL22	Two-stage thermostat
CL33	Two-stage digital thermostat
CL36	Modulating wall heating/cooling thermostat
CL52	Single-stage digital thermostat
CM1	Locking thermostat cover
CM1B	Large locking thermostat cover
CN1A–CN3Z	Various remote switch options
CP5, CP6, CP7, CP8, CP42, CP59	Disconnect switches
SA1	Photoelectric air duct sensor

Technical Data

Parameter	Unit of Measure	Unit Size							
		250	300	350	400	500	600	700	800
Input heating capacity	BTUh	250,000	300,000	350,000	400,000	500,000	600,000	700,000	800,000
	kW	73.3	87.9	102.6	117.2	146.6	175.9	205.2	234.5
Output heating capacity (80%)	BTUh	200,000	240,000	280,000	320,000	400,000	480,000	560,000	640,000
	kW	58.6	70.3	82.1	93.8	117.2	140.7	164.1	187.6
Air volume	CFM	1855–4630	2225–5555	2595–6480	2965–7405	3705–9255	4445–11,110	5185–12,960	5925–14,815
	meter^3/hr	3147–7866	3775–9440	4406–11,011	5034–12,585	6293–15,731	7550–18,878	8809–22,024	10,068–25,171
Temperature rise*	°F	40–100							
Gas connection, natural gas	inch	1/2					3/4		
Gas connection, propane		1/2							
Full load amps (120V)	amp	3.8							
Unit control amps (24V)		1.66							
*For two furnaces at full rate.									

Certification

This unit is design-certified to ANSI and CSA standards by the Canadian Standards Association and is approved for installation in the United States and in Canada. The furnaces are approved for use with either natural gas or propane. The type of gas for which the furnace is equipped, the correct firing rate, and electrical requirements are shown on the unit's rating plate.

Installation Codes

These units must be installed in accordance with local building codes. In the absence of local codes, in the United States, the unit must be installed in accordance with the National Fuel Gas Code (ANSI Z223.1, latest edition). A Canadian installation must be in accordance with the Natural Gas and Propane Installation Code (CSA B149, latest edition). This code is available from CSA Information Services, 1-800-463-6727. Local authorities having jurisdiction should be consulted before installation is made to verify local codes and installation procedure requirements.

Unit Location

- Select a location that complies with the requirements in this manual.
- There are a variety of factors, such as system application, building structure, dimensions, and weight, that contribute to selecting the location.
- The location must comply with the clearances listed in the **Clearances** section.
- A duct furnace is designed for connection to an inlet and an outlet duct and depends on an external air handler.

Combustion Air Requirements

The combustion air and flue gas openings are carefully designed screened openings located on the side of the unit just above the control access panel. Location of the flue opening directly above the air intakes discourages recirculation of combustion products.

Halogenated Hydrocarbons

Halogenated hydrocarbons are a family of chemical compounds characterized by the presence of halogen elements (fluorine, chlorine, bromine, etc.). These compounds are used in refrigerants, cleaning agents, and solvents and are heavier than air, a fact that should be kept in mind when determining the installation location of heaters and building exhaust systems.

⚠ CAUTION ⚠

CORROSION HAZARD: Halogenated hydrocarbons, when exposed to flame, precipitate with any condensation present in the heater to form hydrochloric acid, which readily attacks all metals, including 300 grade stainless steel. Care should be taken to separate these vapors from the combustion process. An outside air supply MUST BE provided to the burner whenever the presence of these compounds is suspected.

Venting Requirements

Locate power-vented furnaces so that flue discharge is not directed at fresh air inlets. The flue discharge openings are located on the side of the furnace just above the control access panel. The position of this opening discourages recirculation of combustion products and provides for furnace operation in all normal weather conditions.

Ductwork Requirements

⚠ CAUTION ⚠

Joints where ducts attach to furnace must be sealed securely to prevent air leakage into burner rack area. Leakage can cause poor combustion, poor performance, and pilot problems and can shorten heat exchanger life.

NOTE: Make adjustments to ductwork as necessary to obtain a temperature rise and static pressure within the ranges specified on the heater rating plate.

Refer to the installation, operation, and maintenance manual provided with the unit for further information on ductwork requirements.

Clearances

Clearance to combustibles is defined as the minimum distance—from the heater to a surface or object—that is necessary to ensure that a surface temperature of 90°F (50°C) above the surrounding ambient temperature is not exceeded. For safety, adequate combustion air, and convenient installation and service, ensure that clearances are as follows:

Unit Surface	Minimum Clearance (Inches (mm))
Top	36 (915)
Control side	6 (152) + width of furnace
Side opposite controls	6 (152)
Bottom, to combustibles	0 (0)*
Bottom, to noncombustibles	0 (0)
*The unit is certified for installation on a combustible surface when it is equipped with standard heater-mounting rails.	

Weights

Type	Unit Size					
	250	300, 350	400	500, 600	700	800
	Pounds (kg)					
Unit	402 (182)	434 (196)	494 (224)	590 (268)	666 (302)	722 (328)
Shipping	464 (210)	528 (240)	566 (257)	666 (302)	744 (337)	806 (366)

TECHNICAL SPECIFICATIONS—CONTINUED

Dimensions

NOTES:

Inches (mm)

Standard airflow may be reversed by changing direction of heat exchanger air baffles.

Burner and control access shown left-hand side. Specify right-hand side for opposite access and connections.

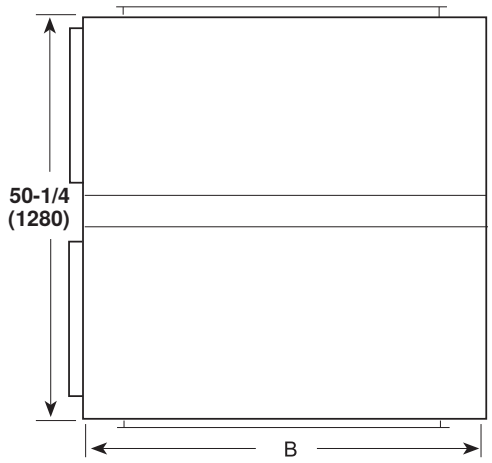

TOP VIEW

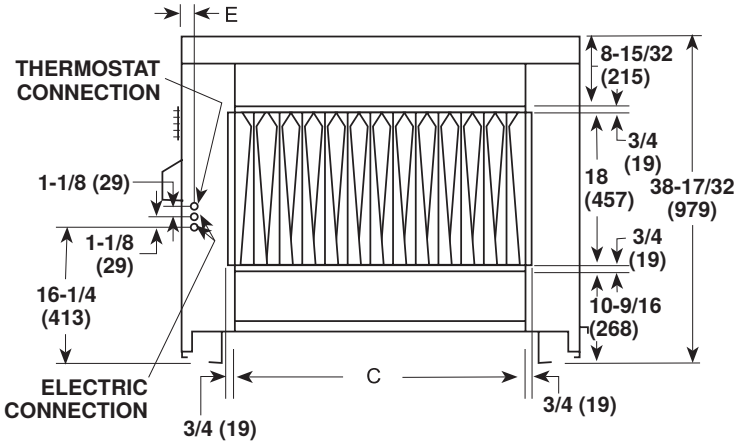

FRONT VIEW

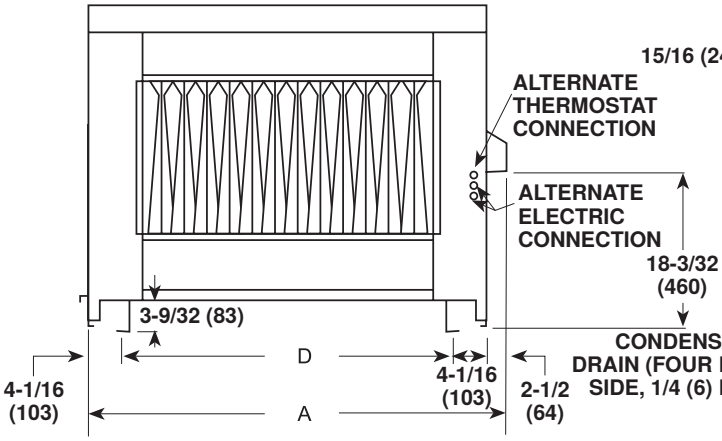

REAR VIEW

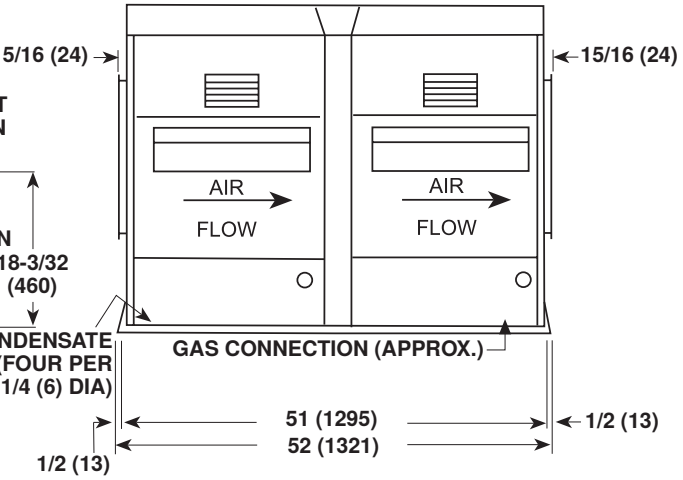

LEFT SIDE VIEW

Dimension (See Graphic Above)	Unit Size					
	250	300, 350	400	500, 600	700	800
	Inches (mm)					
A	30-15/16 (786)	36-7/16 (926)	41-15/16 (1065)	50-3/16 (1275)	55-11/16 (1414)	61-3/16 (1554)
B	28-1/2 (724)	34 (864)	39-1/2 (1003)	47-3/4 (1213)	53-1/4 (1353)	58-3/4 (1492)
C	15-1/4 (387)	20-3/4 (527)	26-1/4 (667)	34-1/2 (876)	40 (1016)	45-1/2 (1156)
D	20-5/16 (516)	25-13/16 (656)	31-5/16 (795)	39-9/16 (1005)	45-1/16 (1145)	50-9/16 (1284)
E	3-3/32 (79)	1-21/32 (42)				

Duct Furnace Airflow

- The duct furnace must be installed on the positive pressure side of the field-supplied blower.
- The air distribution must be even over the entire heat exchanger. Turning vanes should be employed in elbows or turns in the air inlet to ensure proper air distribution.
- The air throughput must be within the CFM range stated on the heater rating plate.
- If it is determined that the blower CFM is greater than allowed or desirable, refer to the installation manual for determining the correct size of bypass duct required or for instructions on converting the furnace for a higher CFM application.
- To determine temperature rise, the inlet and outlet air temperatures should be measured at points not affected by heat radiating from the heat exchanger. The foolowing table lists the approved temperature rise range with the required CFM and the internal pressure drop for each size of unit.

Temperature Rise	Unit Size							
	250	300	350	400	500	600	700	800
	CFM/Pressure Drop (IN WC)							
80% Thermal Efficient								
40°F	4630/1.97	5556/1.45	6481/2.02	7407/1.70	9259/1.53	11,111/2.14	12,963/2.09	14,815/2.09
50°F	3704/1.26	4444/0.92	5185/1.29	5926/1.09	7407/0.98	8889/1.37	10,370/1.34	11,852/1.34
60°F	3086/0.88	3704/0.64	4321/0.90	4938/0.76	6173/0.68	7407/0.95	8642/0.93	9877/0.93
70°F	2646/0.64	3175/0.47	3704/0.66	4233/0.56	5291/0.50	6349/0.70	7407/0.68	8466/0.68
80°F	2315/0.49	2778/0.36	3241/0.51	3704/0.43	4630/0.38	5556/0.54	6481/0.52	7407/0.52
90°F	2058/0.39	2469/0.29	2881/0.40	3292/0.34	4115/0.30	4938/0.42	5761/0.41	6584/0.41
100°F	1852/0.32	2222/0.23	2593/0.32	2963/0.27	3704/0.24	4444/0.34	5185/0.33	5926/0.33

⚠ DANGER ⚠

FIRE OR EXPLOSION HAZARD

- **Failure to follow safety warnings exactly could result in serious injury, death, or property damage.**
- **Improper installation, adjustment, alteration, service, or maintenance can cause serious injury, death, or property damage.**
- **Installation and service must be performed by a qualified installer, service agency, or the gas supplier.**
- **Do not store or use gasoline or other flammable vapors and liquids in the vicinity of this or any other appliance.**

WHAT TO DO IF YOU SMELL GAS

- **Do not try to light any appliance.**
- **Do not touch any electrical switch; do not use any phone in your building.**
- **Leave the building immediately.**
- **Immediately call your gas supplier from a phone remote from the building. Follow the gas supplier's instructions.**
- **If you cannot reach your gas supplier, call the fire department.**

For more information on Reznor HVAC products:

- **Contact your local Reznor representative at 1-800-695-1901**
- **Refer to the manuals and additional consumer materials found at www.reznorhvac.com**

Specifications and illustrations subject to change without notice or incurring obligations.
Latest version of this document is available at **www.reznorhvac.com**.
©2026 Reznor LLC, Saint Charles, MO. All rights reserved.
HRPD-TSL (10-26) REV-H