REZNOR®

Revision: SSCBL-IOM (10-26) 149159-M

Supersedes: SSCBL-IOM (06-26) 149159-L

SEPARATED-COMBUSTION INDOOR AIR HANDLER INSTALLATION, OPERATION, AND MAINTENANCE

MODEL SSCBL

⚠ DANGER ⚠

FIRE OR EXPLOSION HAZARD

- **Failure to follow safety warnings exactly could result in serious injury, death, or property damage.**
- **Improper installation, adjustment, alteration, service, or maintenance can cause serious injury, death, or property damage.**
- **Installation and service must be performed by a qualified installer, service agency, or the gas supplier.**
- **Be sure to read and understand the installation, operation, and service instructions in this manual.**
- **Do not store or use gasoline or other flammable vapors and liquids in the vicinity of this or any other appliance.**

WHAT TO DO IF YOU SMELL GAS

- **Do not try to light any appliance.**
- **Do not touch any electrical switch; do not use any phone in your building.**
- **Leave the building immediately.**
- **Immediately call your gas supplier from a phone remote from the building. Follow the gas supplier's instructions.**
- **If you cannot reach your gas supplier, call the fire department.**

DO NOT DESTROY. PLEASE READ CAREFULLY. KEEP IN A SAFE PLACE FOR FUTURE REFERENCE.

TABLE OF CONTENTS

GENERAL INFORMATION . . . 4
Important Safety Information . . . 4
Warranty . . . 5
Certification . . . 5
Installation Codes . . . 5
Separated Combustion . . . 5
Dimensions . . . 6
Weights . . . 6
Clearances . . . 7
System Configurations . . . 7
Unit Location . . . 7
Halogenated Hydrocarbons . . . 7
INSTALLATION . . . 8
Unpacking and Inspection . . . 8
Pre-Installation Checklist . . . 8
Mounting Support Structure . . . 8
Curb Cap Base . . . 9
Field-Supplied Support Assembly . . . 9
Mounting . . . 10
Suspension . . . 10
Mounting on Rails . . . 11
Duct Connections . . . 11
Requirements and Suggestions for Connecting and Installing Ducts . . . 11
Discharge Air Temperature Sensor Installation . . . 13
Venting/Combustion Air Connections . . . 15
Specific Venting Requirements: Piping . . . 15
Specific Venting Requirements: Support . . . 16
Specific Venting Requirements: Clearance . . . 16
Specific Venting Requirements: Venter Outlet and Combustion Air Inlet Connections . . . 16
Specific Venting Requirements: Joints and Sealing . . . 16
Specific Venting Requirements: Concentric Adapter Box . . . 18
Specific Venting Requirements: Concentric Adapter Box Pipe Connections . . . 19
Vent Terminal Options . . . 20
Vertical Vent Terminal (Option CC2) Installation . . . 20
Horizontal Vent Terminal (Option CC6) Installation . . . 27
Piping Connections . . . 30
Gas Supply Pressure . . . 30
Gas Supply Piping . . . 31
Supply Piping Connections . . . 32
Electrical Connections . . . 33
Supply Wiring . . . 34
Control Wiring . . . 34
CONTROLS . . . 35
Standard Controls . . . 35
Combustion Air Proving Switch . . . 35
Blower Fan Control . . . 36
High Temperature Limit Switch . . . 36
Reverse Flow Limit Switch . . . 36
Combination Gas Valve . . . 36
Pilot and Ignition Systems . . . 37
Burners and Carryover System . . . 37

TABLE OF CONTENTS—CONTINUED

Optional Controls . . . 38
Two-Stage Heating Control (Options AG2 and AG11) . . . 38
Two-Stage Makeup Air Control (Options AG3, AG15, and AG17) . . . 38
Electronic Modulation (Options AG7, AG8, AG9, AG21, AG39, AG40, AG41, and AG42) . . . 40
Dampers and Damper Controls (Options AR1, AR4, AR6, AR8, AR18, AR23, and AR25) . . . 42
Dirty Filter Switch (Option BE18) . . . 43
Airflow Proving Switch (Makeup Air with Option BW1) . . . 43
Space Temperature (Option D19) or Makeup Air (Option D21) Control . . . 43
Photoelectric Air Duct Smoke Detector (Option SA1) . . . 43
Variable Frequency Drive (Option VFD1 or VFD2) . . . 44
Thermostat . . . 44
OPERATION . . . 44
Pre-Startup Checklist . . . 45
Startup . . . 45
Post-Startup Checklist . . . 46
ADJUSTMENTS . . . 46
Belts, Blowers, and Drives . . . 46
Checking and Adjusting Belt Tension . . . 46
Adjusting Blower Speed . . . 47
Reversing Blower Rotation . . . 48
Motor Load and Amp Adjustment . . . 48
Adjust Heat Stage Controllers (Option AG41 or AG42) . . . 49
Pressure Null Switch Adjustment . . . 50
Damper Linkage Adjustment . . . 51
Dirty Filter Switch Adjustment . . . 51
Measure and Adjust Manifold (Outlet) Gas Pressure . . . 52
High-Elevation Conversion . . . 53
Gas Conversion . . . 54
Burner Air Shutter Adjustment . . . 55
MAINTENANCE . . . 55
Maintenance Procedures . . . 56
Combination Gas Valve Maintenance . . . 56
Burner Rack Maintenance . . . 56
Cleaning Pilot and Burners . . . 57
Spark Ignition System Maintenance . . . 58
Blower Bearing Lubrication . . . 59
Venter Motor Maintenance . . . 59
Cooling Coil Maintenance . . . 59
Heat Exchanger Cleaning . . . 59
TROUBLESHOOTING . . . 60
General Troubleshooting . . . 60
Troubleshooting Bypass Combustion Air Damper Safety Circuit on Units with Option AG39, AG40, AG41, or AG42 . . . 62
INSTALLATION RECORD (TO BE COMPLETED BY INSTALLER) . . . 64

GENERAL INFORMATION

- This unit has been tested for capacity and efficiency so as to provide many years of safe and dependable comfort providing it is properly installed and maintained. With regular maintenance, this unit will operate satisfactorily year after year. Abuse, improper use, and/or improper maintenance can shorten the life of the appliance and create unsafe hazards.
- To achieve optimum performance and minimize equipment failure, it is recommended that periodic maintenance be performed on this unit. The ability to properly perform maintenance on this equipment requires certain tools and mechanical skills.
- These packaged systems include duct furnaces that are design-certified to ANSI and CSA standards by the Canadian Standards Association and that are approved for installation in the United States and in Canada. The furnaces are approved for use with either natural gas or propane. The type of gas for which the furnace is equipped, the correct firing rate, and electrical requirements are shown on the unit's rating plate.

Important Safety Information

Please read all information in this manual thoroughly and become familiar with the capabilities and use of your appliance before attempting to operate or maintain this unit. Pay attention to all dangers, warnings, cautions, and notes highlighted in this manual. Safety markings should not be ignored and are used frequently throughout to designate a degree or level of seriousness.

DANGER: A danger statement describes a potentially hazardous situation that if not avoided, will result in severe personal injury or death and/or property damage.

WARNING: A warning statement describes a potentially hazardous situation that if not avoided, can result in severe personal injury and/or property damage.

CAUTION: A caution statement describes a potentially hazardous situation that if not avoided, can result in minor or moderate personal injury and/or property damage.

NOTE: A note provides important information that should not be ignored.

⚠ DANGER ⚠

- **Gas-fired appliances are not designed for use in hazardous atmospheres containing flammable vapors or combustible dust, in atmospheres containing chlorinated or halogenated hydrocarbons, or in applications with airborne silicone substances.**
- **Should overheating occur, or the gas supply control system fail to shut off the flow of gas, shut off the manual gas valve to the unit before shutting off the electrical supply.**
- **Do not use this appliance if any part has been under water. Immediately call a qualified service technician to inspect the appliance and replace any gas control that has been under water.**
- **Installation should be done by a qualified agency in accordance with these instructions. The qualified service agency installing this heater is responsible for the installation.**
- **This appliance is not intended for use by persons with reduced physical, sensory, or mental capabilities or lack of experience and knowledge, unless they have been given supervision or instruction concerning use of the appliance by a person responsible for their safety.**
- **Children should be supervised to ensure that they do not play with the appliance.**

⚠ WARNING ⚠

For your safety, read the warning labels on the unit.

NOTES:

- **Read this manual and become familiar with the installation requirements of your particular furnace. If you do not have knowledge of local requirements, check with the local gas company or any other local agencies who might have requirements concerning this installation.**
- **The instructions in this manual apply only to model SSCBL units.**

Warranty

Refer to the limited warranty form in the literature bag provided with the unit. The warranty is void if:

- Furnaces are used in atmospheres containing flammable vapors or atmospheres containing chlorinated or halogenated hydrocarbons or any contaminant (silicone, aluminum oxide, etc.) that adheres to the spark ignition flame sensing probe.
- Wiring is not in accordance with the diagram furnished with the heater.
- Unit is installed without proper clearance to combustible materials or without proper ventilation and air for combustion.
- Furnace air throughput is not adjusted within the range specified on the rating plate.

Certification

- This unit is design-certified to ANSI and CSA standards by the Canadian Standards Association and is approved for installation in the United States and in Canada. The furnaces are approved for use with either natural gas or propane. The type of gas for which the furnace is equipped, the correct firing rate, and electrical requirements are shown on the unit's rating plate.
- These gas-fired products are certified by ANSI Z83 family of standards governing the safe usage of heating equipment in the industrial/commercial marketplace. This includes using the heaters in makeup air applications to supply corridor pressurization in commercial buildings such as office structures and apartment complexes.
- The heaters are not certified as residential heating equipment and should not be used as such.

Installation Codes

- These units must be installed in accordance with local building codes. In the absence of local codes, in the United States, the unit must be installed in accordance with the *National Fuel Gas Code* (NFPA 54/ANSI Z223.1, latest edition). A Canadian installation must be in accordance with the *Natural Gas and Propane Installation Code* (CSA B149, latest edition). This code is available from CSA Information Services, 1-800-463-6727. Local authorities having jurisdiction should be consulted before installation is made to verify local codes and installation procedure requirements.
- Installations in aircraft hangars should be in accordance with the *Standard for Aircraft Hangars* (ANSI/NFPA 409, latest edition). Installations in public garages should be in accordance with the *Standard for Parking Structures* (ANSI/NFPA 88A, latest edition). Installations in repair garages should be in accordance with the *Standard for Repair Garages* (NFPA 88B), which has been incorporated into the *Code for Motor Fuel Dispensing Facilities and Repair Garages* (NFPA 30A, latest edition). In Canada, installations in aircraft hangars and public garages should be in accordance with CSA B149.
- Clearances from the heater and vent to combustible construction or material in storage must conform with the *National Fuel Gas Code* (NFPA 54/ANSI Z223.1, latest edition) pertaining to gas-burning devices, and such material must not attain a temperature over 160°F (71°C) by continued operation of the heater.
- If the heater is being installed in the Commonwealth of Massachusetts, installation must be performed by a licensed plumber or licensed gas fitter.

Separated Combustion

Separated-combustion units are designed to separate air for combustion and flue products from the environment of the building in which the unit is installed. Separated-combustion appliances are recommended for use in dust-laden and some corrosive-fume environments. As the definition states, all separated-combustion, power-vented equipment must be equipped with both combustion-air and exhaust piping to the outdoors. This separated-combustion unit is designed and manufactured in accordance with the ANSI definition of separated combustion, which reads:

> **Separated Combustion System Appliance: A system consisting of an appliance and a vent cap(s) supplied by the manufacturer, and (1) combustion air connections between the appliance and the outside atmosphere, and (2) flue gas connections between the appliance and vent cap, of a type(s) specified by the manufacturer but supplied by the installer, constructed so that, when installed in accordance with the manufacturer's instructions, air for combustion is obtained from the outside atmosphere and flue gases are discharged to the outside atmosphere.**

Dimensions

NOTE: The vent pipe collar OD = 6 (152). The inlet air collar ID = 6 (152).

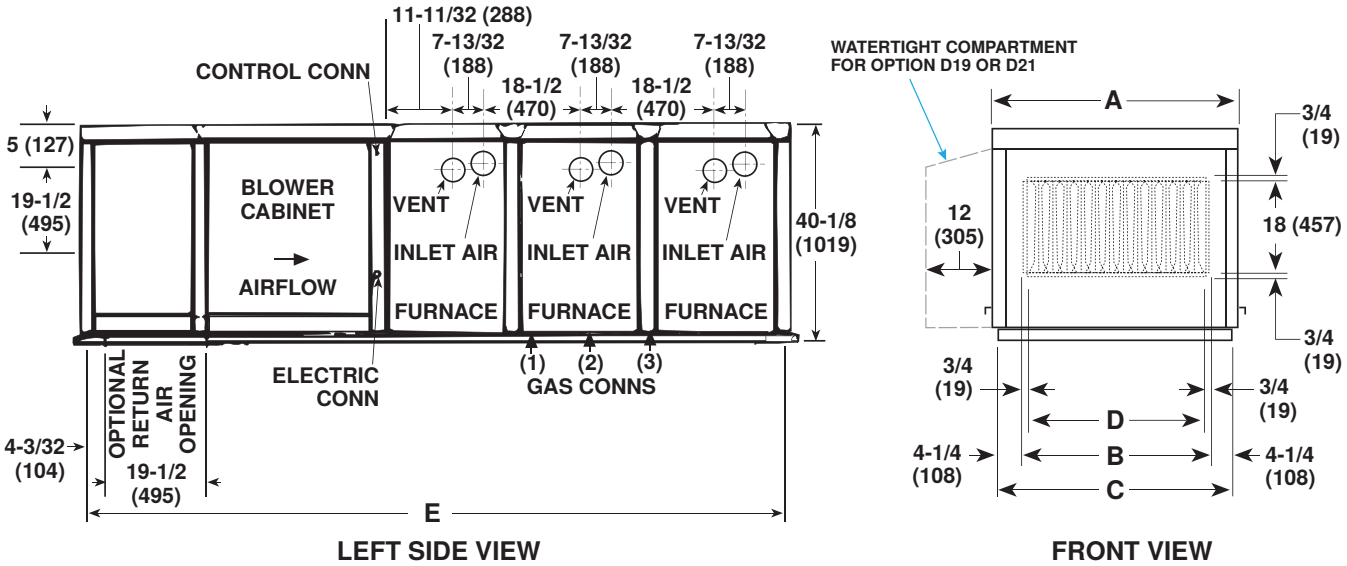

Figure 1. Dimensions (Refer to Table 1)

Table 1. Dimensions

Dimension (See Figure 1)	Unit Size (MBTUh)					
	400	500, 600	700	800	1050	1200
	Inches (mm)					
A*	58-7/8 (1495)	47-7/8 (1216)	53-3/8 (1356)	58-7/8 (1495)	53-3/8 (1356)	58-7/8 (1495)
B	47-5/8 (1210)	36-5/8 (930)	42-1/8 (1070)	47-5/8 (1210)	42-1/8 (1070)	47-5/8 (1210)
C	56-1/8 (1426)	45-1/8 (1146)	50-5/8 (1286)	56-1/8 (1426)	50-5/8 (1286)	56-1/8 (1426)
D	45-1/2 (1156)	34-1/2 (876)	40 (1016)	45-1/2 (1156)	40 (1016)	45-1/2 (1156)
E	83-1/2 (2121)	109-1/2 (2781)			135-1/2 (3442)	

Air Opening (See Figure 1)	Inches (mm)
Horizontal air inlet opening	19-1/2 (495) × B
Optional return air opening (bottom)	
Horizontal discharge air opening	18 (457) D

Gas Connection Location** (See Figure 1)	Approximate Distance from Inside Curb Cap on Blower End of System (Inches (mm))	Unit Size (MBTUh)
1	89–90 (2261–2286)	400
2	103–104 (2616–2642)	500, 600, 700, 800
3	110–111 (2794–2819)	1050, 1200

*For units with option D19 or D21, add 12-1/4 inches (312 mm) for the watertight compartment, which is factory-installed on the unit's control compartment access panel.

**The gas connection is at curb cap height on the control side of the system.

Weights

Table 2. Weights

Type	Unit Size (MBTUh)					
	400	500, 600	700	800	1050	1200
	Pounds (kg)					
Unit	849 (385)	1104 (500)	1184 (537)	1245 (565)	1476 (670)	1565 (710)
Shipping (base unit)	1218 (552)	1588 (720)	1668 (757)	1898 (861)	2148 (974)	2243 (1017)

Clearances

Clearance to combustibles is defined as the minimum distance—from the heater to a surface or object—that is necessary to ensure that a surface temperature of 90°F (50°C) above the surrounding ambient temperature is not exceeded. For safety, adequate combustion air, and convenient installation and service, ensure that the clearances listed in **Table 3** are provided.

Table 3. Clearances

Unit Surface	Minimum Clearance (Inches (mm))
Top	6 (152)
Control side	56 (1422)
Side opposite controls, to combustibles	6 (152)
Side opposite controls, for motor access	30 (762)
Bottom	6 (152)

System Configurations

Table 4. System Configurations

Unit Size (MBTUh)	No. of Furnace Sections	No. of Blower Cabinets
400	1	1
500, 600, 700, 800	2	
1050, 1200	3	

Unit Location

⚠ CAUTION ⚠

Do not locate the unit where it may be exposed to water spray, rain, or dripping water.

- Select a location that complies with the requirements in this manual.
- There are a variety of factors, such as system application, building structure, dimensions, and weight, that contribute to selecting the location.
- The location must comply with the clearances listed in **Table 3**.

Halogenated Hydrocarbons

Halogenated hydrocarbons are a family of chemical compounds characterized by the presence of halogen elements (fluorine, chlorine, bromine, etc.). These compounds are used in refrigerants, cleaning agents, and solvents and are heavier than air, a fact that should be kept in mind when determining the installation location of heaters and building exhaust systems.

⚠ CAUTION ⚠

CORROSION HAZARD: Halogenated hydrocarbons, when exposed to flame, precipitate with any condensation present in the heater to form hydrochloric acid, which readily attacks all metals, including 300 grade stainless steel. Care should be taken to separate these vapors from the combustion process. An outside air supply MUST BE provided to the burner whenever the presence of these compounds is suspected.

INSTALLATION

Unpacking and Inspection

The unit was test-operated and inspected at the factory prior to crating and was in operating condition. If, upon removing it from its crate, the unit has been found to have incurred any damage in shipment, document the damage with the transporting agency and contact an authorized Factory Distributor. If you are an authorized Distributor, follow the FOB freight policy procedures.

Pre-Installation Checklist

- ❑ Check the rating plate for the gas specifications and electrical characteristics of the heater to ensure that they are compatible with the gas and electric supplies at the installation site.
- ❑ Read this manual and become familiar with the installation requirements of your particular heater.
- ❑ If you do not have knowledge of local requirements, check with the local gas company or any other local agencies who might have requirements concerning this installation.
- ❑ Before beginning, make preparations for necessary supplies, tools, and manpower.
- ❑ Check to see if there are any field-installed options (refer to **Table 5**) that need to be assembled/installed prior to unit installation. Ensure that all options ordered are at the installation site. Instructions are in this manual or in the shipped-separate option package.

Table 5. Field-Installed Options

Option	Description
BE4	Evaporator froststat
CC2	Vertical vent terminal kit
CC6	Horizontal vent terminal kit
CL1	Single-stage thermostat
CL9	Electronic modulating room override
CL22	Two-stage thermostat
CL23	Two-stage programmable thermostat
CL33	Two-stage digital thermostat
CL36	Modulating wall heating/cooling thermostat (with option AG21, AG40, or AG42)
CL78	Space-mounted thermostat/sensor (with option D19 or D21)
CM1	Locking thermostat cover
CM1B	Large locking thermostat cover
CN1A–CN3Z	Various remote switch options
CP1, CP2, CP3, CP17, CP41	Disconnect switches
RB5	Remote display (with option D19 or D21)
SA1	Photoelectric air duct smoke detector
VFD2	Variable frequency drive

Mounting Support Structure

⚠ DANGER ⚠

Before installation, check the supporting structure to ensure that it has sufficient load-carrying capacity to support the weight of the unit along with any optional equipment.

⚠ CAUTION ⚠

The supports MUST BE secure, square, and level and MUST COMPLY with Table 3.

NOTE: The system can have a variety of configurations that affect installation. Prior to installation, ensure that the method of support is in agreement with all local building codes.

Curb Cap Base

- Units are equipped with a load bearing curb cap that forms an integral part of the unit. The curb cap is welded at all joints.
- The curb cap has suspension holes at each corner and hanger brackets on the sides. Each suspension location requires a 1/2-inch threaded rod (refer to **Suspension** section).

Field-Supplied Support Assembly

⚠ WARNING ⚠

Do not close or block the openings under each end of a system mounted on 4 × 4 treated wooden rails. If cross supports are used under the 4 × 4 rails, do not enclose the area under the furnace. The space under the furnace MUST be left open for ventilation.

NOTES:

- **The field-supplied, cross-support structure must be adequate for the weight of the system. Cross-supports should run the entire width of the system to support the rails at the recommended locations (see Figure 2, DETAIL A).**
- **Whether the supports are mounted directly on a surface or placed up on an additional structure, the horizontal length of the system should be supported by two 4 × 4 treated wooden rails.**

1. Cut treated 4 × 4 wooden rails for length in accordance with dimension A (see **Figure 2**, DETAIL A).
2. Space rails in accordance with dimension B (see **Figure 2**, DETAIL A) so that curb cap skirt fits over edge of boards with rails sitting inside horizontal length of curb cap. If rails are being laid directly on roof, position them as shown in **Figure 2**, DETAIL A).
3. If rails are not being placed directly on surface, install cross-supports underneath rails at ends of unit and at all cabinet joints (see **Figure 2**, DETAIL B).

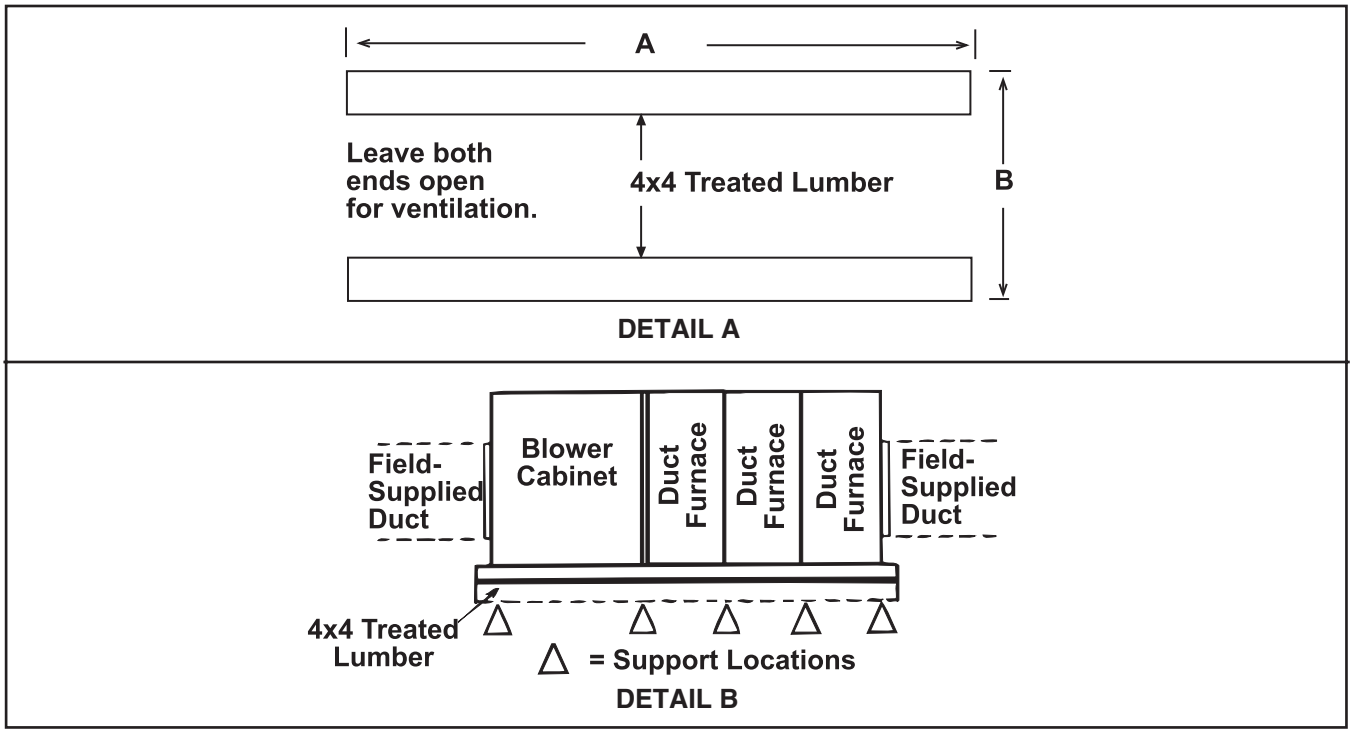

Figure 2. Field-Supplied Support Assembly (Refer to Table 6)

Mounting Support Structure—Continued

Field-Supplied Support Assembly—Continued

Table 6. Field-Supplied Support Assembly Dimensions

Dimension (See Figure 2)	Configuration	Unit Size (MBTUh)					
		400	500, 600	700	800	1050	1200
		Inches (mm)					
A	Standard	82-1/4 (2089)	108-1/4 (2750)	108-1/4 (2750)	108-1/4 (2750)	134-1/4 (3410)	134-1/4 (3410)
	With cooling coil cabinet (option AU2 or AU3)	150-1/4 (3816)	176-1/4 (4477)	176-1/4 (4477)	176-1/4 (4477)	202-1/4 (5137)	158-1/4 (4020)
B	All	54-1/2 (1384)	43-9/16 (1106)	49-1/16 (1246)	54-1/2 (1384)	49-1/16 (1246)	54-1/2 (1384)

Mounting

Model SSCBL systems are designed for either suspension or mounting on rails.

⚠ DANGER ⚠

Use a suitable hoist to lift the unit (refer to Weights section). Lifting holes are provided for rigging. Use spreader bars when lifting to prevent chains or cables from damaging the unit.

⚠ CAUTION ⚠

All installed systems must be level. Properly suspending or mounting the unit is the responsibility of the installer.

Suspension

⚠ WARNING ⚠

Units must be level for proper operation. Do not place additional weight on or add additional weight to the suspended unit.

The curb cap has suspension holes at each corner and six hanger brackets on the sides (see **Figure 3**, DETAIL A for suspension dimensions). Each suspension point requires a 1/2-inch threaded rod (see **Figure 3**, DETAIL B).

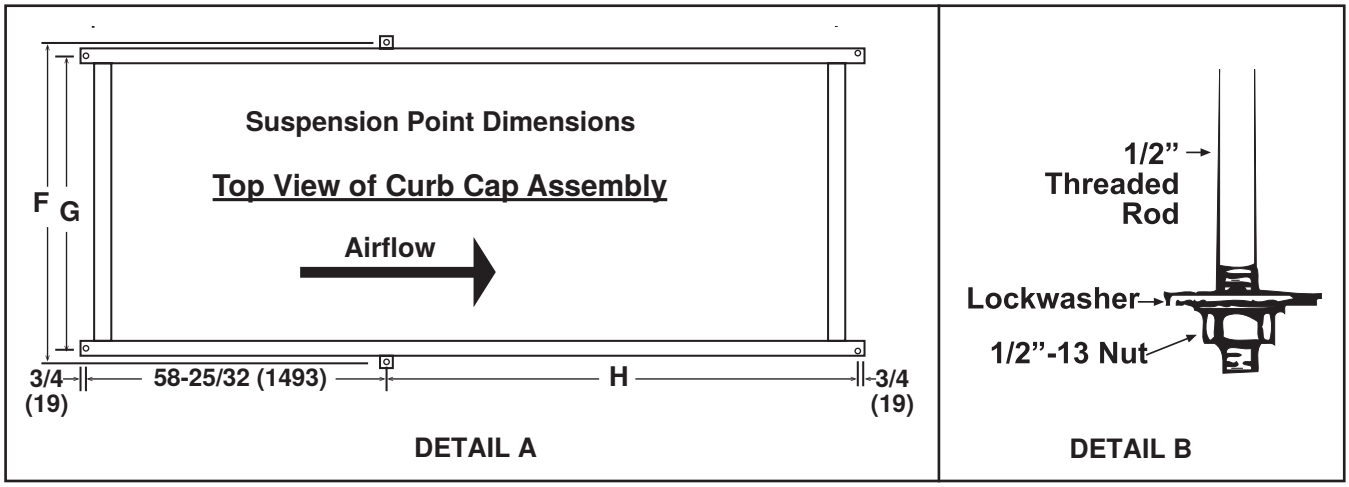

Figure 3. Suspension (Refer to Table 7)

Table 7. Suspension Dimensions						
Dimension (See Figure 3)	Unit Size (MBTUh)					
	400	500, 600	700	800	1050	1200
	Inches (mm)					
F	59-9/16 (1513)	48-9/16 (1233)	54-1/16 (1373)	59-9/16 (1513)	54-1/16 (1373)	59-9/16 (1513)
G	54-3/8 (1381)	43-3/8 (1102)	48-7/8 (1229)	54-3/8 (1381)	48-7/8 (1229)	54-3/8 (1381)
H*	27-3/32 (688)	53-3/32 (1352)			79-7/32 (2012)	
*Does not apply to a system with a field-installed cooling coil cabinet (option AU2 or AU3).						

Mounting on Rails

Lift the unit using a suitable hoist and spreader bars and set it on the rails. Leave the ends open underneath for ventilation.

Duct Connections

NOTE: When ordered, a filter rack with a variety of filter options, is factory-installed in the blower cabinet. Refer to the replacement parts manual found at www.reznorhvac.com for replacement filters. For air opening dimensions, refer to Table 1.

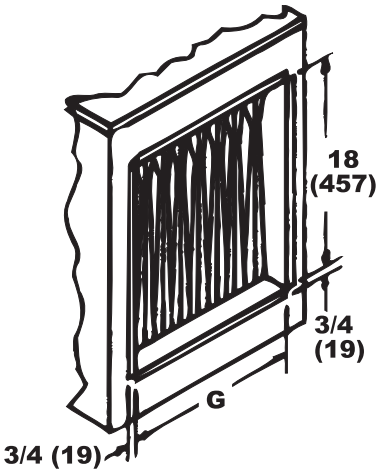

Figure 4. Duct Connection Dimensions (Refer to Table 8)

Table 8. Duct Connection Dimensions		
Unit Size (MBTUh)		
500, 600	700, 1050	400, 800, 1200
Dimension G (Inches (mm))*		
34-1/2 (876)	40 (1016)	45-1/2 (1156)
*See Figure 4.		

Requirements and Suggestions for Connecting and Installing Ducts

- **Type of ductwork:** The type of duct installation to be used depends in part on the construction type of the roof—whether wood or steel bar joist, steel truss, or pre-cast concrete—and the ceiling—whether hung, flush, etc.
- **Ductwork material:** Rectangular duct should be constructed of galvanized iron—not lighter than No. 26 US gauge—or aluminum—No. 24 B&S gauge.
- **Ductwork structure:** All duct sections 24 inches (610 mm) or wider and over 48 inches (1,219 mm) in length should be cross-broken on top and bottom and should have standing seams or angle-iron braces. Joints should be S and drive strip or locked.
- **Through masonry walls:** No warm air duct should come in contact with masonry walls. Insulate around all air duct through masonry walls with 1-inch (not less than 1/2-inch) of insulation.

Duct Connections—Continued

- **Through unheated space:** Insulate all exposed warm air ducts passing through an unheated space with 1-inch (not less than 1/2-inch) of insulation.
- **Duct supports:** Suspend all ducts securely from adjacent buildings members. Do not support ducts from unit duct connections.
- **Duct sizing:** Proper sizing of the supply air ductwork is necessary to ensure a satisfactory heating installation. The recognized authority for duct size is the Air Conditioning Contractor's Association, 2800 Shirlington Road, Suite 300, Arlington, VA 22206 (**www.acca.org**). A manual covering duct sizing in detail may be purchased directly from them.

⚠ CAUTION ⚠

To prevent possible motor overloading, ensure that the external duct system static pressure is within the limits shown on the rating plate and that the motor pulley and belt are properly adjusted.

- **Horizontal discharge duct length:** A minimum horizontal duct run of 24 inches (610 mm) is recommended before turns or branches are made in the duct system to reduce losses at the furnace outlet.

⚠ CAUTION ⚠

The joint where the supply air duct attaches to the furnace must be sealed securely to prevent air leakage into draft hood or burner rack area. Leakage can cause poor combustion and pilot problems, can shorten heat exchanger life, and can cause poor performance.

- **Supply air duct/furnace horizontal connection:** Connect the duct to the furnace in accordance with the following steps shown in **Figure 5**:
  a. Ensure that flanges on furnace (heat exchanger) turn out as shown.
  b. Shape duct connection as shown—U-type on top and bottom and L-type on sides.
  c. Slide U-channels over furnace top and bottom flanges.
  d. Drill fastener holes and secure U-channels using sheet metal screws.
- **Access panels:** Install removable access panels (see **Figure 5**) on both the upstream and downstream sides of the furnace. The access panels must be accessible when the furnace is in service and should be a minimum of 6 × 10 inches (152 × 254 mm) in size so smoke or reflected light may be observed inside the casing to indicate the presence of leaks in the heat exchanger. Ensure that the access panels are installed in such a manner so as to prevent leakage.

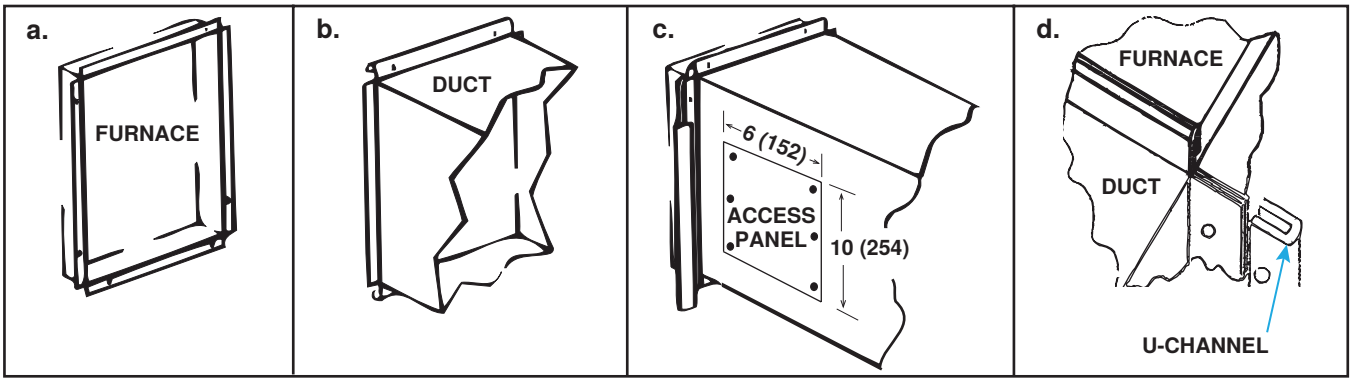

Figure 5. Connecting Ductwork to Furnace

- **Return air duct:** All return air ducts should be attached and sealed to the return air flanges to provide airtight connections. Ensure that return air ducting or grills have a free area equal to the size of the return duct connection.

Discharge Air Temperature Sensor Installation

Depending on the gas control option, the discharge air temperature sensor is either factory- or field-installed. Field-installed sensors have one of two configurations: a sensor and mixing tube assembly or a sensor holder and junction box assembly. For units with the sensor holder and junction box assembly option, the sensor is normally installed on a bracket in the furnace discharge for shipping but it may be mounted in the cabinet leg (see **Figure 6**).

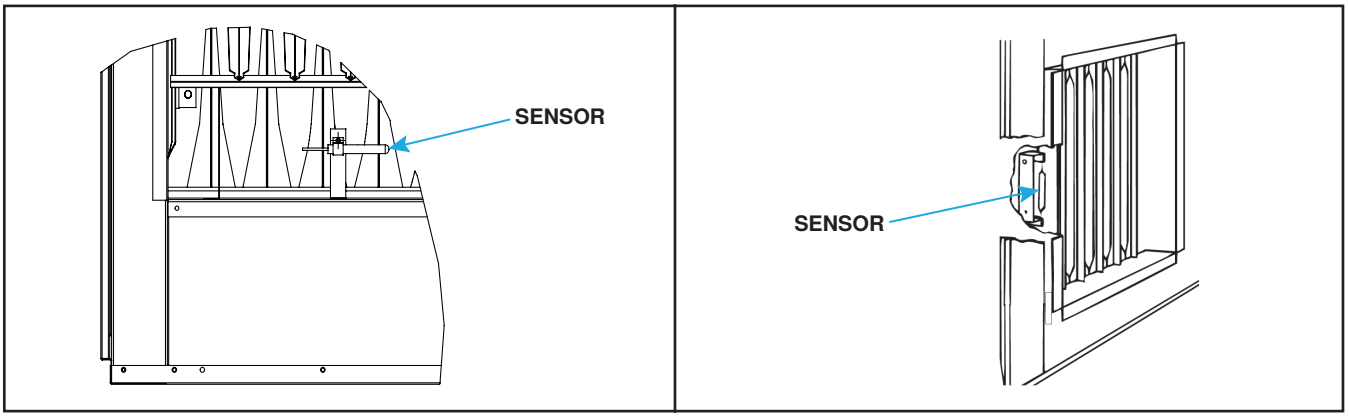

Figure 6. Shipping Locations of Capillary Sensor

NOTE: According to the latest edition of AMCA Standard 201, in straight ducts, the air is typically well mixed a minimum of five equivalent duct diameters from the discharge of the unit with equivalent duct diameter defined as equal to the square root of 4AB/3.14 (A and B are duct cross-sectional dimensions). If the length of the discharge duct is less than 8 feet (2.4 meters), a mixing vane is recommended for mixing the discharge air. Do not mount the sensor in the ductwork after a split in the supply as this will cause loss of control in the duct that does not house the sensor.

1. Determine distance of sensor from unit:
   a. Locate the sensor a minimum of 96 inches (2,435 mm) from the outlet of the unit. Ensure that there is sufficient distance from outlet to have good mixture of discharge air temperature.
   b. Refer to following formula for calculating sensor placement—this assumes cross-sectional dimensions for supply ductwork of 24 × 12 inches (610 × 305 mm):

$$5\ equivalent\ duct\ diameters \times \sqrt{\frac{4 \times 12 \times 24}{3.14}} = 96\ inches$$

$$5\ equivalent\ duct\ diameters \times \sqrt{\frac{4 \times 305 \times 610}{3.14}} = 2435\ millimeters$$

2. Determine orientation of sensor:
   a. In horizontal ductwork, position sensor in top-middle of duct with sensor probe extending vertically down into center of air stream.
   b. In vertical ductwork, position sensor in middle of duct that corresponds with top-middle of discharge outlet.

NOTE: Position of sensor in duct is important—mixing tube is 12 inches (305 mm) long and sensor holder extends 9-3/16 inches (233 mm) into ductwork.

3. Secure sensor in ductwork:
   a. For units with sensor and mixing tube assembly (see **Figure 7**), remove ductwork access panel, slide mixing tube into ductwork, and secure sensor.

Duct Connections—Continued

Discharge Air Temperature Sensor Installation—Continued

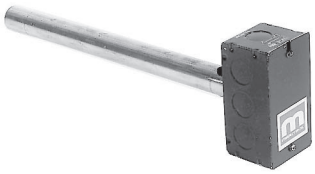

Figure 7. Sensor and Mixing Tube Assembly

NOTE: For the capillary sensor, select a ductwork location so that the minimum length of capillary tubing will be inside the ductwork. Because the sensor is larger than the tubing, a gasket and gasket retainer plate are provided to plug the hole and to protect the capillary tubing where it passes through the ductwork. Two field-supplied sheet metal screws are needed to secure the plate.

b. For units with sensor holder and junction box assembly option (see **Figure 8**):

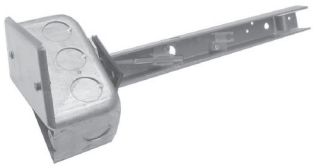

Figure 8. Sensor Holder and Junction Box Assembly

(1) Before connecting ductwork to furnace, remove capillary sensor from its shipping position on furnace (see **Figure 6**).

(2) At selected ductwork location, mark and cut 1/2-inch hole hole that will be sealed with gasket and retainer plate (see **Figure 9**). Push sensor and capillary tubing through hole.

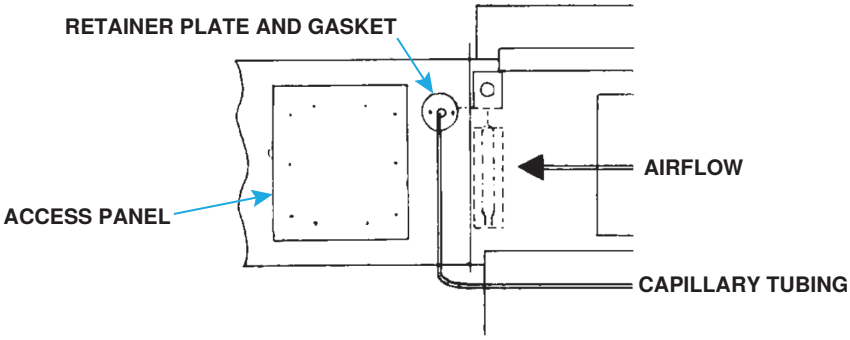

Figure 9. Capillary Sensor Installation

(3) Remove ductwork access panel (see **Figure 9**) and install sensor in sensor holder so that it senses air temperature as it flows through holes in holder.

(4) Position sensor holder and junction box assembly inside ductwork so that sensor will be shielded from direct airflow and secure junction box to ductwork using four field-supplied #6 sheet metal screws.

(5) Slide gasket (cut slit) and retainer plate over capillary tubing. With gasket next to ductwork, install hole retaining plate and secure using field-supplied sheet metal screws.

(6) Close ductwork access panel.

NOTE: Ensure that all sensor wires are connected in accordance with the wiring diagram provided with the unit.

4. Connect sensor wire(s)—for units with sensor holder and junction box assembly, remove junction box knockout and connect sensor wire using field-supplied cable connector secured to box.

Venting/Combustion Air Connections

⚠ DANGER ⚠

Do not use an existing venting system. Each furnace section requires installation of the combustion air/vent system ordered with the unit (either option CC2 or CC6). Vent installation to be any listed vent system manufacturer. Do not intermix different vent system parts from different manufacturers in the same venting system.

NOTE: All model SSCBL installations require a vent/combustion air kit for each furnace section.

- All separated-combustion, power-vented units MUST BE equipped with both combustion air and exhaust piping to the outdoors. The unique concentric adapter box designed for use with this heater allows for both combustion air and exhaust piping with only one horizontal or vertical penetration hole in the building.
- These instructions apply to installation and use of the concentric adapter and vent/combustion air kit (option CC2 or CC6) designed for use with all Reznor separated-combustion products. The systems illustrated in this manual are the only venting/combustion air systems approved for these separated-combustion units. Do not use this concentric adapter box with any other products.
- Installation should be done by a qualified agency in accordance with these instructions. The service agency installing this separated-combustion system is responsible for the installation.

Specific Venting Requirements: Piping

All pipe is field-supplied. Requirements for both the vent pipe and the combustion air inlet pipe are as follows:

- **Vent pipe:** Vent pipe approved for a Category III appliance OR single-wall, 26-gauge or heavier galvanized (or a material of equivalent durability and corrosion resistance) vent pipe is required between the furnace section and the concentric adapter box. Double-wall (Type B) vent pipe is required for the vent terminal section. The length of vent pipe that extends through the box and runs concentric through the combustion air pipe must be one piece with no joints.
- **Combustion air pipe:** Sealed, single-wall galvanized pipe is recommended for combustion air.
- **Pipe length and diameter:** Vent pipe diameters and maximum indoor vent lengths apply to both horizontal and vertical vents. Pipe diameter and length requirements listed for the indoor sections of pipe—between the heater and the concentric adapter box—are listed in **Table 9**.

Table 9. Pipe Diameter and Maximum Pipe Length from Each Furnace Section to Concentric Adapter Box

Diameter/Length	Unit Size (MBTUh)	
	500, 600	400, 700, 800, 1050, 1200
Diameters (Inches (mm))		
Vent pipe	6 (152)	
	7 (178)	
Inlet air pipe	6 (152)	
	7 (178)	
Lengths (Feet (Meters))		
Minimum	5 (1.5)	
Maximum, 6-inch pipe	50 (15)	30 (9)
Maximum, 7-inch pipe	70 (21)	
Equivalent straight length for 45-degree elbow	4 (1.2)	
Equivalent straight length for 90-degree elbow	8 (2.4)	

Venting/Combustion Air Connections—Continued

Specific Venting Requirements: Piping—Continued

NOTE: Add all straight sections and equivalent lengths for elbows. The total length of the straight sections and elbows must not exceed the maximum length.

- **Outdoor concentric pipes length and diameter:** The lengths of the outside (terminal) concentric pipes depend on the installation. The diameters are 8 inches (203 mm) for the inlet air pipe and 5 inches (127 mm) for the vent pipe.

Specific Venting Requirements: Support

Support horizontal runs every six feet (1.8 meters). Support vertical runs of Type B double-wall or Category III vent pipe in accordance with the requirements of the pipe manufacturer. Support single-wall vertical pipe in accordance with accepted industry practices. Do not rely on the heater or the adapter box for support of either horizontal or vertical pipes. Use noncombustible supports on vent pipe.

NOTE: The double-wall vent terminal pipe does not attach to the concentric adapter box and must be supported during installation.

Specific Venting Requirements: Clearance

Do not enclose the vent pipe or place pipe closer than 6 inches (152 mm) to combustible material.

Specific Venting Requirements: Venter Outlet and Combustion Air Inlet Connections

⚠ DANGER ⚠

All separated-combustion units MUST BE equipped with both combustion air and exhaust piping to the outdoors.

Each furnace section has both an inlet air and a venter outlet connection. Both are 6 inches (152 mm) in diameter for all unit sizes.

NOTE: If using 7-inch pipe, use a tapered 7- to 6-inch reducer to connect the vent pipe or combustion air pipe.

Specific Venting Requirements: Joints and Sealing

Seal pipe joints as follows:

- **To seal joints in Category III vent pipe:** Follow the pipe manufacturer's instructions for joining and sealing Category III vent pipe sections.
- **To seal joints in single-wall vent or combustion air pipe:** Secure slip-fit pipe connections using sheet metal screws or rivets. Seal all joints with aluminum tape or silicone sealant.
- **To seal the joint in the terminal section of double-wall vent pipe (allowed ONLY ABOVE the concentric pipes on a VERTICAL vent):** Follow the pipe manufacturer's instructions for joining and sealing double-wall vent pipe sections.

- **Connect double-wall (type B) pipe to a vent cap as follows:**
  a. Apply continual 3/8-inch bead of silicone sealant around circumference of vent cap collar (see **Figure 10**, DETAIL A) to prevent any water inside vent cap from running down double-wall pipe.
  b. Before sealant has any time to dry, insert collar on vent cap as far as possible inside inner wall of double-wall pipe (see **Figure 10**, DETAIL B).
  c. Apply additional silicone sealant to fully close any gaps between vent cap and double-wall pipe to prevent water from entering double-wall pipe.
  d. Secure vent cap to double wall pipe by drilling hole and inserting 3/4-inch-long sheet metal screw into vent cap collar (see **Figure 10**, DETAIL C). Do not overtighten screw.

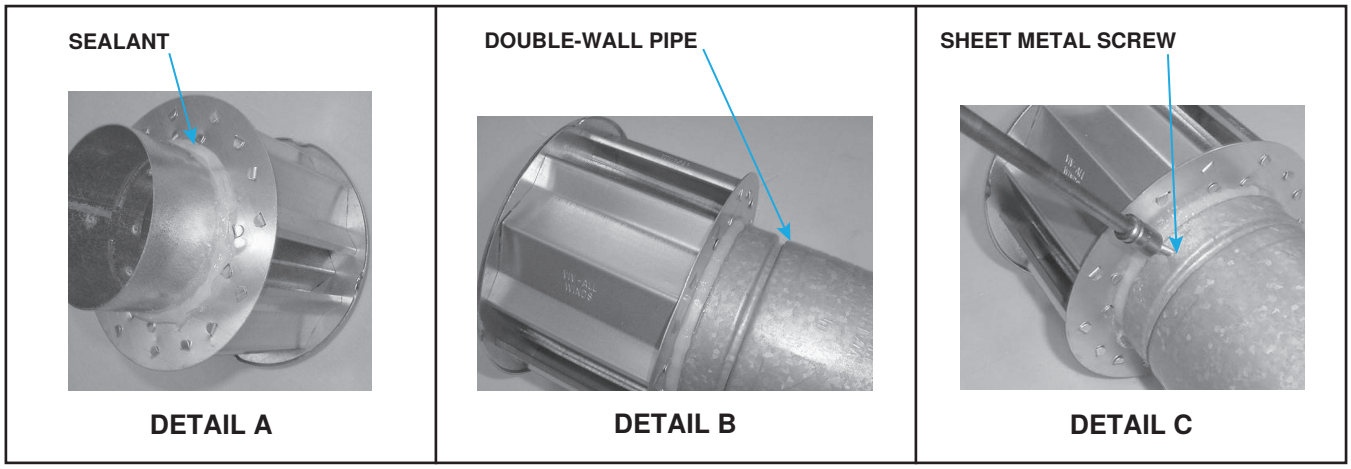

Figure 10. Connecting Double-Wall (Type B) Pipe to Vent Cap

- **Connect double-wall (type B) pipe to a single-wall or category III vent pipe—within 6 inches (152 mm) of the concentric adapter box and using a taper-type reducer as necessary—as follows:**
  a. Apply continual 1/4-inch bead of silicone sealant (see **Figure 11**, DETAIL A) around circumference of pipe.
  b. Before sealant has any time to dry, insert pipe with sealant into inner wall of double-wall pipe (see **Figure 11**, DETAIL B) until bead of sealant contacts inner pipe to create sealed joint.
  c. Drill three small holes—spaced equally around double-wall pipe—below sealant ring (see **Figure 11**, DETAIL C) and insert 3/4-inch-long sheet metal screws to secure joint. Do not overtighten screws.

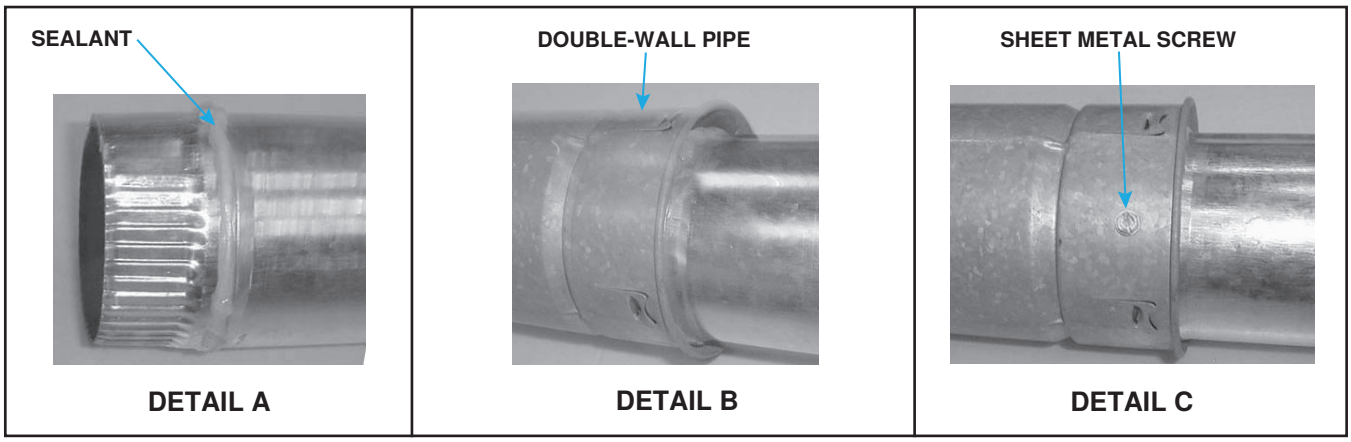

Figure 11. Connecting Double-Wall (Type B) Pipe to Single-Wall or Category III Vent Pipe

Venting/Combustion Air Connections—Continued

Specific Venting Requirements: Concentric Adapter Box

NOTE: A concentric adapter box is required for each furnace section.

The concentric adapter box (PN 205885) is included in the vent/combustion air kit. Installation instructions depend on whether the vent system is horizontal (option CC6) or vertical (option CC2). All separated-combustion installations require a concentric adapter box as shown in **Figure 12**.

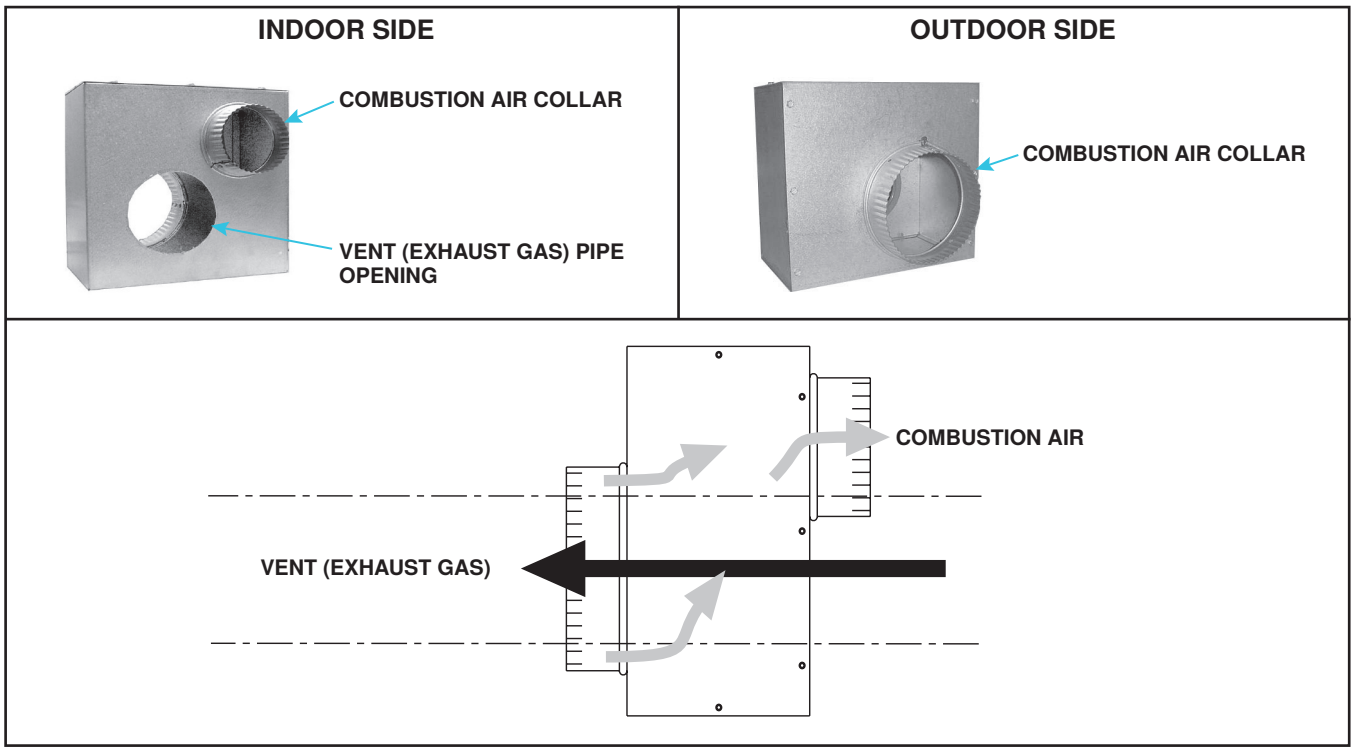

Figure 12. Concentric Adapter Box

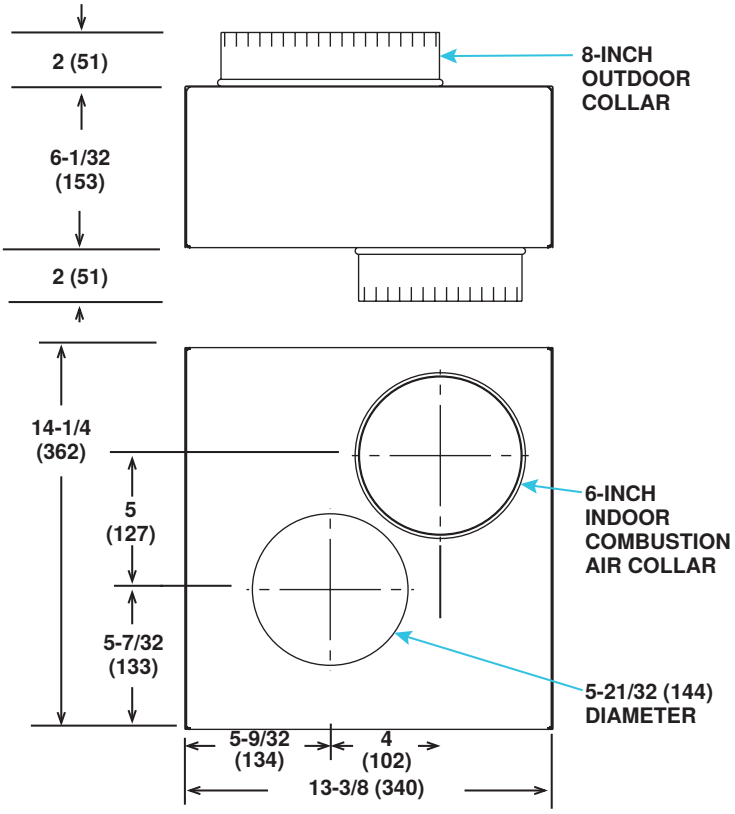

Figure 13. Concentric Adapter Box Dimensions

Specific Venting Requirements: Concentric Adapter Box Pipe Connections

When pipe diameters differ, depending on the direction of airflow, join the pipes with a taper-type reducer. Requirements vary depending on the unit size. The connection requirements are the same for both vertical and horizontal systems, but the length of pipe required varies by installation.

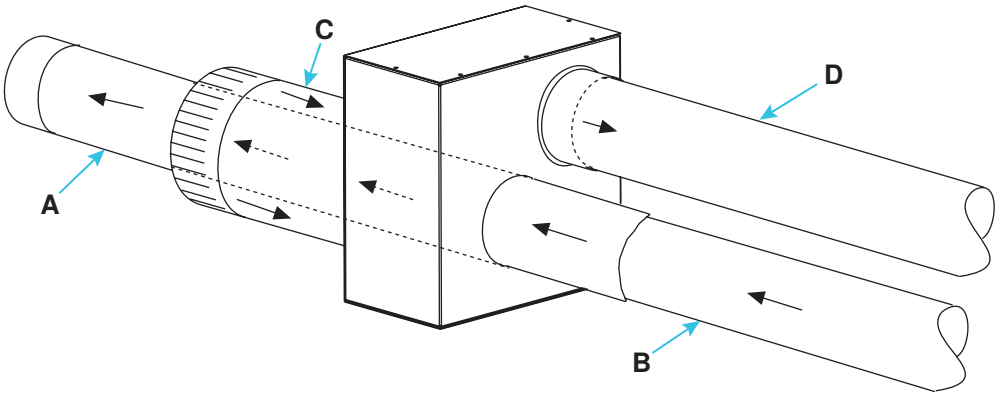

Figure 14. Concentric Adapter Box Connections (Refer to Table 10)

Venting/Combustion Air Connections—Continued

Specific Venting Requirements: Concentric Adapter Box Pipe Connections—Continued

Table 10. Concentric Adapter Box Pipe Sizes

Diameter of Pipe Between Furnace and Box	Vent Pipe		Combustion Air Pipe	
	Pipe Diameter (See Figure 14)			
	A	B	C	D
Inches (mm)				
6 (152)	5 (127)	6 (152)*	8 (203)	6 (152)
7 (178)		7 (178)**		7 (178)***

*Requires a 6–5 inch (152–127 mm) taper-type reducer installed within 6 inches (152 mm) of the concentric adapter box.

**Requires a 7–5 inch (178–127 mm) taper-type reducer installed within 6 inches (152 mm) of the concentric adapter box.

***Requires a 7–6 inch (178–152 mm) taper-type reducer installed within 6 inches (152 mm) of the concentric adapter box.

Vent Terminal Options

Vent terminal options CC2 (vertical vent configuration) and CC6 (horizontal vent configuration) are shown in **Figure 15**.

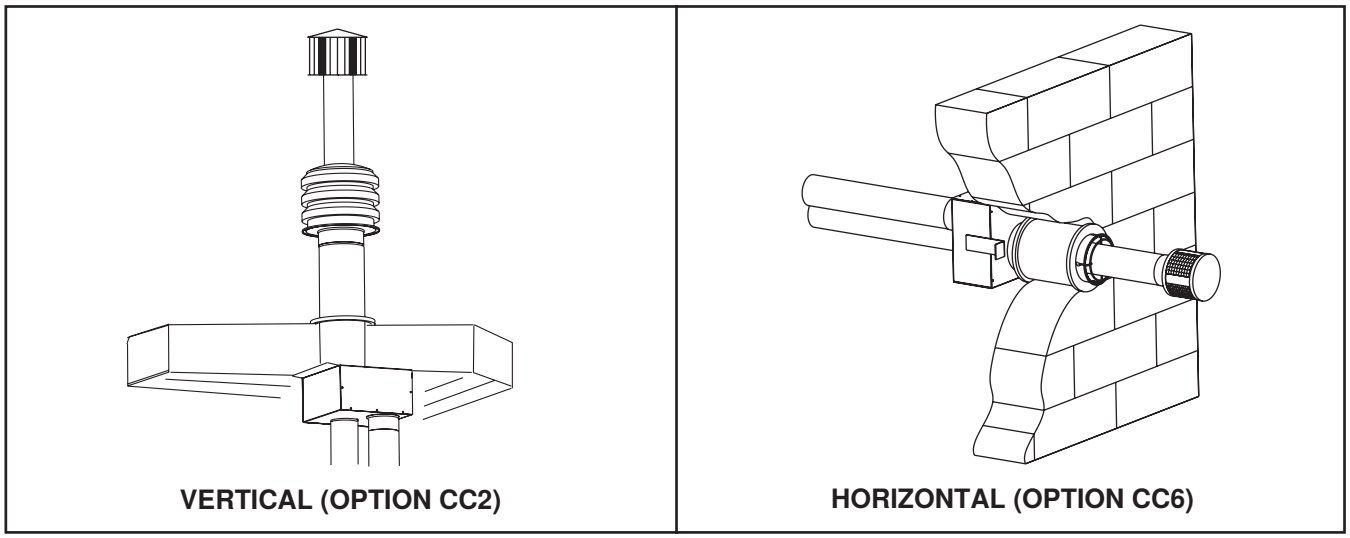

Figure 15. Vent Terminal Options

Vertical Vent Terminal (Option CC2) Installation

- Field-supplied components required for installation of the vertical vent kit are as follows:
  a. Vent and combustion air piping in accordance with **Table 9**
  b. Tapered vent pipe diameter reducers, as required
  c. Thimble (not required if wall is of non-combustible construction)
  d. Flashing
  e. Sheet metal screws, tape, and sealant, as required
- Factory-supplied components for installation of the vertical vent kit are listed in **Table 11**.

Table 11. Vertical Vent Terminal/Combustion Air Package (Option CC2) Components		
PN	**Description**	**Quantity**
205896	Kit package	1*
205885	Concentric adapter box (see **Figure 12**)	1
110052	Exhaust vent terminal assembly (see **Figure 16**)	1
53330	Combustion air inlet assembly (see **Figure 16**)	1
207232	Concentric adapter box bracket	2
53335	High-temperature silicone sealant, tube	1
*One (1) required for each furnace section.		

EXHAUST VENT TERMINAL CAP

COMBUSTION AIR INLET

Figure 16. Option CC2 Components

⚠ DANGER ⚠

To prevent combustion products from entering the occupied space, all vent terminals must be positioned or located away from fresh air intakes, doors, and windows. Failure to comply could result in severe personal injury or death and/or property damage.

1. Determine vent terminal location on roof:
   a. If more than one vertical vent terminal is being installed, minimum spacing between vent center lines is determined by minimum outdoor design temperature (coldest outdoor condition at installation site). Refer to **Table 12** to ensure that location complies with minimum outdoor design temperature requirements.

Table 12. Minimum Spacing Between Center Lines of Vertical Vent Pipes	
Minimum Outdoor Design Temperature	**Minimum Spacing Between Center Lines of Vertical Vent Pipes (Inches (mm))**
≥31°F (≥0°C)	36 (914)
−10 to 30°F (−23 to −1°C)	60 (1524)
< −10°F (< −23°C)	84 (2134)

   b. Select location away from fresh air intakes, allowing space for concentric adapter box inside. Vent terminal must be located away from adjacent buildings as shown in **Figure 17**.

Venting/Combustion Air Connections—Continued

Vertical Vent Terminal (Option CC2) Installation—Continued

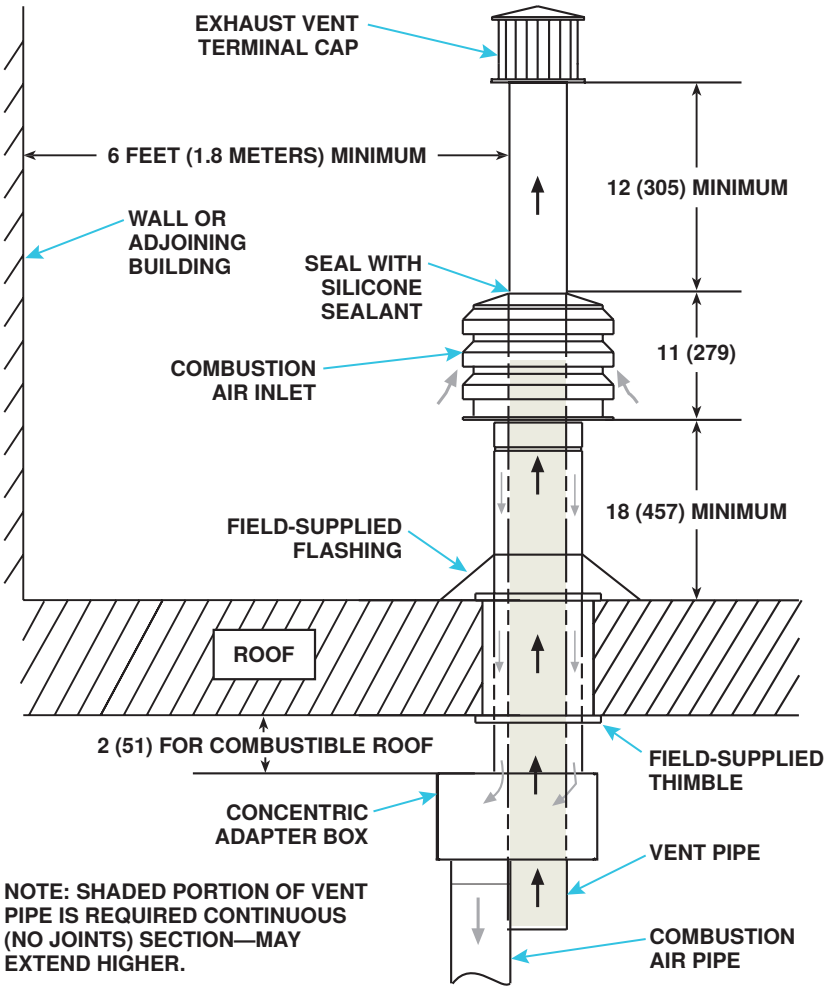

Figure 17. Option CC2 Installation

2. Install vent pipe and combustion air pipe runs:
   a. Connect piping to heater in accordance with specifications listed in **Specific Venting Requirements: Piping** and **Specific Venting Requirements: Venter Outlet and Combustion Air Inlet Connections** sections.
   b. Seal all joints in accordance with specifications listed in **Specific Venting Requirements: Joints and Sealing** section. Due to high temperature considerations, do not enclose exhaust pipe or place pipe closer than 6 inches (152 mm) to combustible material.
   c. Extend piping runs close to roof at location selected in step 1 and support piping in accordance with specifications listed in **Specific Venting Requirements: Support** section.

NOTE: The vent pipe will extend through the roof after the concentric adapter box is installed. The indoor combustion air pipe will end at the box.

3. Cut hole through roof for combustion air pipe.
   a. Ensure that location and orientation of concentric adapter box are correct and mark and cut hole.

b. Ensure that hole accommodates 8-inch (203-mm) combustion air pipe. Thimble may be required depending on building construction and/or local codes. Larger diameter combustion air pipe serves as clearance for vent pipe on non-combustible construction.

c. When installing system with more than one furnace section, ensure that that there is minimum of 26-1/8 inches (664 mm) between center lines of each terminal pipe. Prepare one hole per furnace with spacing as shown in **Figure 18**.

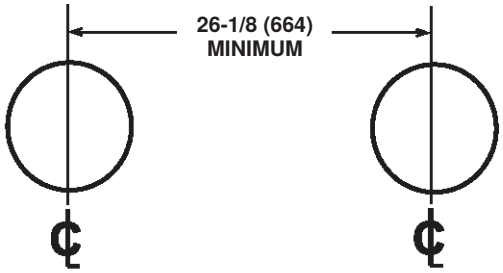

Figure 18. Hole Spacing for Two or More Furnaces

4. Secure longer angles on concentric adapter box brackets (see **Figure 19**) to concentric adapter box.

NOTE: The longer angle of the concentric adapter box bracket has five 7/32-inch holes that allow the position of the bracket on the box to be adjusted. The shorter angle has three 7/32-inch holes that allow adjustment to construction.

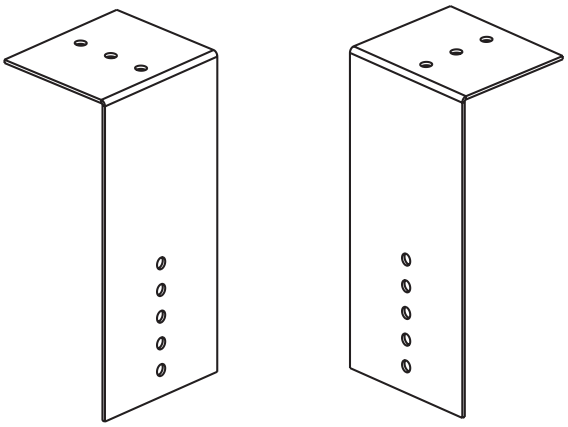

Figure 19. Concentric Adapter Box Brackets

5. Connect outside section of combustion air pipe to concentric adapter box (see **Figure 20**):

⚠ CAUTION ⚠

Ensure that length of combustion air pipe does not *exceed* 48 inches (1,219 mm) or does not extend *less than* 18 inches (457 mm) above roof.

a. Refer to **Figure 20** to determine length of dimension X as follows:
   (1) Bracket length
   (2) Plus roof thickness
   (3) Plus anticipated snow depth

b. Second section of double-wall pipe (see dimension Y in **Figure 20**) may be connected as needed to continuous section of vent pipe. Ensure that connection is minimum of 3 inches (76 mm) above combustion air pipe and that height is 12 inches (305 mm) minimum—34 inches (864 mm) in cold climates where design ambient temperature is −10°F (−23°C) or lower.

c. Secure inlet air pipe to collar of concentric adapter box using sheet metal screws. Seal joint and seam using tape or sealant.

Venting/Combustion Air Connections—Continued

Vertical Vent Terminal (Option CC2) Installation—Continued

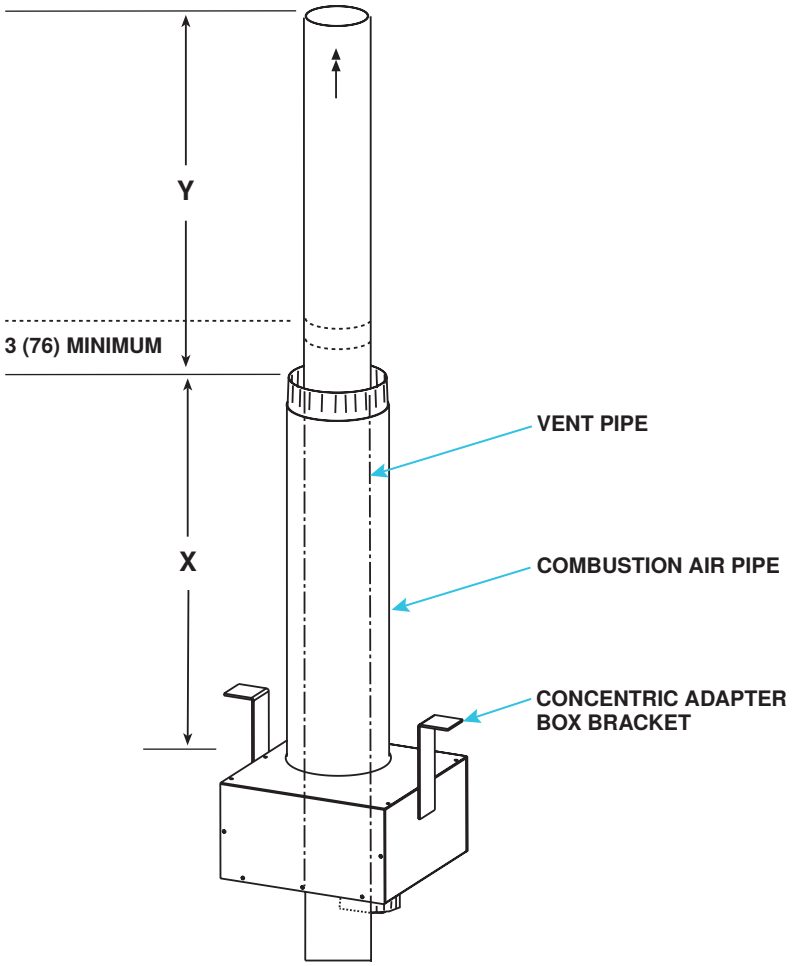

Figure 20. Combustion Air Pipe Installation

6. Secure concentric adapter box to underside of roof (see **Figure 20**):

⚠ CAUTION ⚠

- **If the roof is combustible, ensure that brackets are positioned to allow a 2-inch (51 mm) clearance between the concentric adapter box and the roof.**
- **If any holes are made in the concentric adapter box in error, ensure that they are sealed.**

a. Insert combustion air pipe through roof as shown in **Figure 21**.

b. Position concentric adapter box to match pipe runs and secure short angles of concentric adapter brackets (see **Figure 19**) to underside of roof using field-supplied hardware.

c. Install field-supplied flashing around combustion air pipe on roof outside.

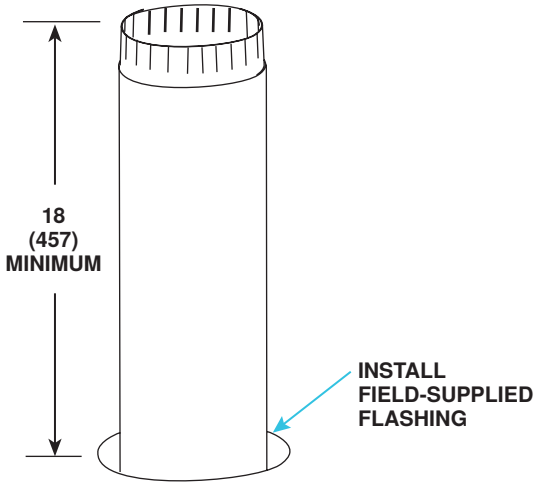

Figure 21. Combustion Air Pipe Through Roof

7. Install double-wall terminal vent pipe:

NOTE: The length of the vent pipe is determined by the installation within maximum and minimum requirements. The vent pipe extending through the box and the inlet air pipe must be one piece of double-wall vent pipe without joints.

a. Refer to **Figure 20** to determine lengths of each pipe segment and to calculate total length required. Determine length by adding requirements:
   (1) Starting at bottom, vent pipe can extend maximum of 6 inches (152 mm) below box
   (2) Plus 6 inches (152 mm) through box
   (3) Plus length of brackets above box
   (4) Plus width of roof
   (5) Plus height of outside combustion air pipe above roof
   (6) Plus mimimum of 3 inches (76 mm) beyond top of inlet air pipe
   (7) Total is mimimum length of vent pipe section—if actual piece of vent pipe is longer, extend it farther above combustion air pipe—do not extend it more than 6 inches (152 mm) below box
b. Ensure that double-wall terminal vent pipe is in proper direction and slide end of pipe into box and out through combustion air pipe. Position vent pipe to lengths determined above.

NOTE: The double-wall vent pipe does not attach to the box. The installer must provide support.

c. Connect double-wall vent pipe to single-wall or Category III vent pipe run using tapered reducer in accordance with **Figure 10**.
d. Seal completely around circumference of pipe and opening of box using silicone sealant.

8. Install combustion air inlet (see **Figure 22**):

⚠ CAUTION ⚠

The combustion air inlet must be at least 6 inches (152 mm) above the anticipated snow depth.

a. Install additional section of vent pipe on outside if needed and make joint in accordance with pipe manufacturer's requirements.
b. With vent pipe at required height, slide combustion air inlet over vent pipe and fasten collar to combustion air pipe using sheet metal screws.

Venting/Combustion Air Connections—Continued

Vertical Vent Terminal (Option CC2) Installation—Continued

c. Seal opening at top between vent pipe and combustion air inlet to prevent water leakage using silicone sealant.

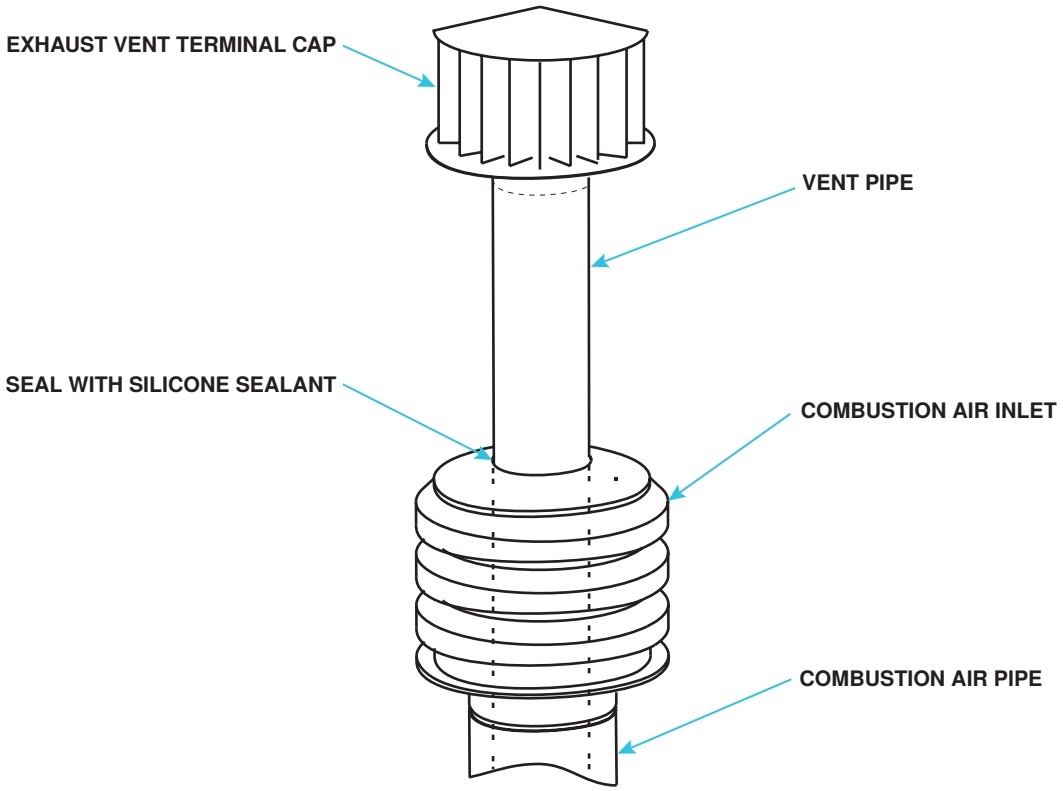

Figure 22. Combustion Air Inlet and Vent Terminal Installation

⚠ CAUTION ⚠

In cold climates where the design ambient temperature is –10°F (–23°C) or lower, the minimum height of the exhaust vent terminal cap above the combustion air inlet is 24 inches (610 mm).

9. Install exhaust vent terminal (see **Figure 22**) in accordance with **Figure 11**.
10. Install indoor combustion air pipe:
    a. Secure single-wall combustion air pipe run to collar on concentric adapter box using sheet metal screws. If using 7-inch piping, install tapered reducer.
    b. Seal pipe joints with tape or sealant.
11. Verify compliance with **Figure 17** and with all specific venting requirements listed above.

Horizontal Vent Terminal (Option CC6) Installation

- Field-supplied components required for installation of the horizontal vent kit are as follows:
  a. Vent and combustion air piping in accordance with **Table 9**
  b. Tapered vent pipe diameter reducers, as required
  c. Thimble (not required if wall is of non-combustible construction)
  d. Flashing
  e. Sheet metal screws, tape, and sealant, as required
- Factory-supplied components for installation of the horizontal vent kit are listed in **Table 13**.

Table 13. Horizontal Vent Terminal/Combustion Air Package (Option CC6) Components

PN	Description	Quantity
205883	Kit package	1*
205885	Concentric adapter box (see **Figure 12**)	1
53316	Assembly, screened exhaust (see **Figure 23**)	1
205894	Inlet guard (see **Figure 23**)	1
37661	Screw, sheet metal, #10-16 × 1/2	4
207232	Concentric adapter box bracket	2
53335	High-temperature silicone sealant, tube	1

*One (1) required for each furnace section.

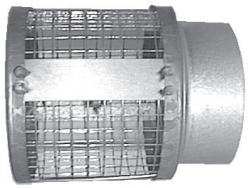

SCREENED EXHAUST ASSEMBLY

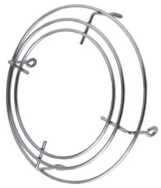

INLET GUARD

Figure 23. Option CC6 Components

⚠ DANGER ⚠

- **To prevent combustion products from entering the occupied space, all vent terminals must be positioned or located away from fresh air intakes, doors, and windows. Failure to comply could result in severe personal injury or death and/or property damage.**
- **In climates with below freezing temperatures, condensate may form icicles on the vent terminal. Locate the terminal where falling icicles do not present a hazard.**
- **Consider local snow depth conditions. The vent must be at least 6 inches (152 mm) above the anticipated snow depth.**

1. Determine vent terminal location on outside wall:
   a. Refer to **Table 9** to ensure that location complies with vent length requirements.
   b. For most applications, ensure that vent terminal is level with heater mounting height.
   c. Allow downward pitch of 1/4-inch per foot (6 mm per 305 mm) for condensate drain.

Venting/Combustion Air Connections—Continued

Horizontal Vent Terminal (Option CC6) Installation—Continued

⚠ WARNING ⚠

Avoid positioning the vent terminal above a walkway as there may be a small amount of condensate that drips from the end of the vent/combustion air terminal. In cold climates, the condensate may form ice.

d. Ensure that distance of vent terminal from adjacent public walkways and buildings and window and building openings complies with local codes. Absent any local codes, distance must comply with National Fuel Gas Code Z223.1.

⚠ CAUTION ⚠

Products of combustion can cause discoloration of some building finishes and deterioration of masonry materials. A clear silicone sealant normally used to protect concrete driveways may be used to protect masonry materials from discoloration and deterioration. If discoloration is an esthetic problem relocate the vent or install a vertical vent.

e. Refer to **Table 14** to ensure that location complies with minimum clearance requirements.

Table 14. Minimum Clearance Requirements for Horizontal Vent Terminal

Component/Structure	Minimum Clearance, All Directions Unless Specified (Feet (Meters))
Forced air inlet within 10 feet (3.1 meters)*	3 (0.9) above
Combustion air inlet of another appliance	6 (1.8)
Mechanical air supply inlet to any building	Canada: 6 (1.8)
Any building opening (door, window, or gravity air inlet)	4 (1.2) horizontal and below
	1 (0.3) above
Gas meter,** electric meter, and relief equipment	US: 4 (1.2) horizontal
	Canada: 6 (1.8) horizontal
Gas regulator**	US: 3 (0.9) horizontal
	Canada: 6 (1.8) horizontal
Adjoining building or parapet	6 (1.8)
Adjacent public walkway	7 (2.1) above
Grade (ground level)	3 (0.9) above
*Does not apply to the inlet of a direct vent appliance.	
**Do not terminate the vent directly above a gas meter or service regulator.	

2. Install vent pipe and combustion air pipe runs:
   a. Connect piping to heater in accordance with specifications listed in **Specific Venting Requirements: Piping** and **Specific Venting Requirements: Venter Outlet and Combustion Air Inlet Connections** sections.
   b. Seal all joints in accordance with specifications listed in **Specific Venting Requirements: Joints and Sealing** section. Due to high temperature considerations, do not enclose exhaust pipe or place pipe closer than 6 inches (152 mm) to combustible material.
   c. Extend piping runs close to wall location selected in step 1 and support piping in accordance with specifications listed in **Specific Venting Requirements: Support** section.

3. Cut hole through outside wall for combustion air pipe.
   a. Ensure that outside wall construction thickness is between 1 inch (25 mm) minimum and 48 inches (1,219 mm) maximum.
   b. Ensure that hole accommodates 8-inch (203-mm) combustion air pipe. Thimble may be required depending on building construction and/or local codes. Larger diameter combustion air pipe serves as clearance for vent pipe on noncombustible construction.
   c. When installing system with more than one furnace section, ensure that that there is minimum of 26-1/8 inches (664 mm) between center lines of each terminal pipe. Prepare one hole per furnace with spacing as shown in **Figure 18**.

NOTE: The longer angle of the concentric adapter box bracket has five 7/32-inch holes that allow the position of the bracket on the box to be adjusted. The shorter angle has three 7/32-inch holes that allow adjustment to construction.

4. Secure longer angles on concentric adapter box brackets (see **Figure 24**) to concentric adapter box.
5. Connect outside section of combustion air pipe to concentric adapter box (see **Figure 24**):
   a. Determine length of combustion air pipe as follows:
      (1) Bracket length from box to wall
      (2) Plus wall thickness
      (3) Plus 2 inches (51 mm) beyond wall
   b. Secure inlet air pipe to collar of concentric adapter box using sheet metal screws. Seal joint and seam using tape or sealant.

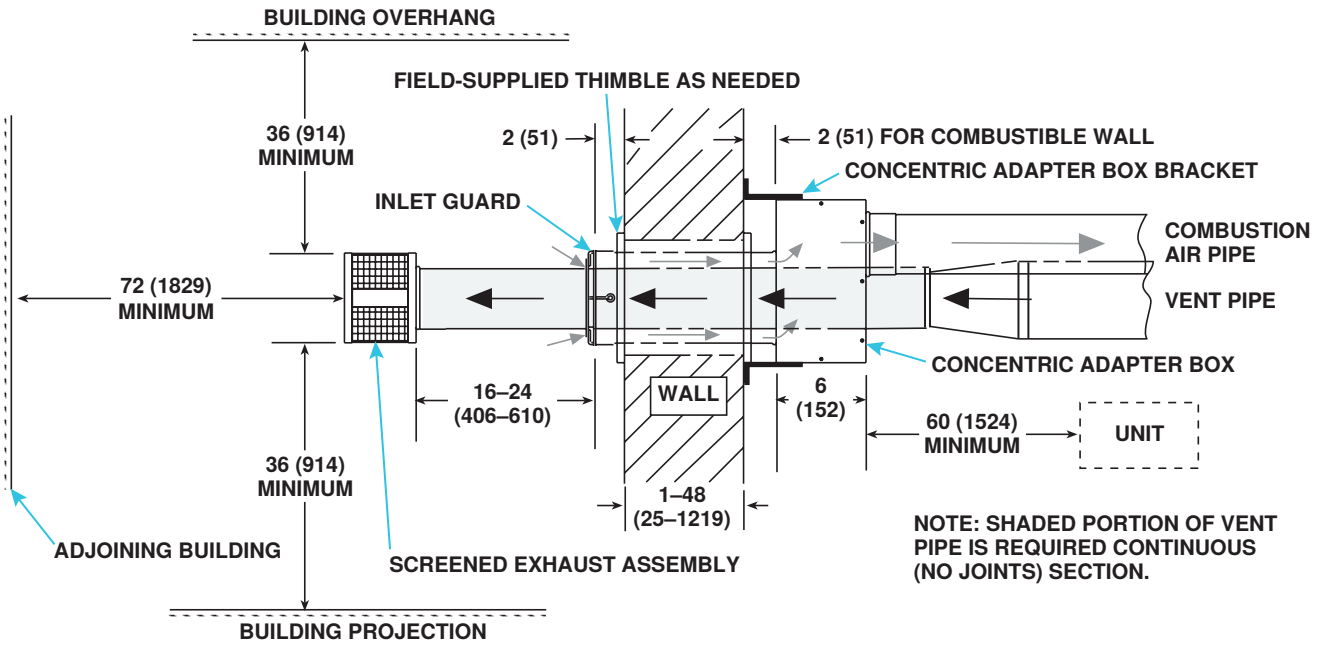

Figure 24. Option CC6 Installation

6. Secure concentric adapter box to wall (see **Figure 24**):

⚠ CAUTION ⚠

If the wall is combustible, ensure that brackets are positioned to allow a 2-inch (51 mm) clearance between the concentric adapter box and the wall. If any holes are made in the concentric adapter box in error, ensure that they are sealed.

   a. Insert combustion air pipe out through wall.
   b. Secure short angles (see **Figure 19**) of concentric adapter box brackets to wall.
   c. Seal or flash inlet air pipe on outside using sealant and/or field-supplied flashing.

Venting/Combustion Air Connections—Continued

Horizontal Vent Terminal (Option CC6) Installation—Continued

7. Install inlet guard:
   a. Position inlet guard over end of combustion air pipe in accordance with **Figure 24**.
   b. Secure air inlet guard to inlet air pipe using four 1/2-inch-long screws provided.

NOTE: If vent pipe is inserted from outside, the exhaust cap may be attached before the double-wall vent pipe is installed. If cap is attached first, ensure that the baffle strips are positioned correctly when attaching the vent terminal pipe to the vent run (refer to step 8d below).

8. Install double-wall terminal vent pipe:

NOTE: The length of the vent pipe is determined by the installation within maximum and minimum requirements. The vent pipe extending through the box and the inlet air pipe must be one piece of double-wall vent pipe without joints.

   a. Refer to **Figure 24** to determine lengths of each pipe segment and to calculate total length required. Transition to single-wall or Category III vent pipe run must be made maximum of 6 inches (152 mm) from heater side of box.
   b. Ensure that double-wall terminal vent pipe is in proper direction and slide end of pipe through box. Position pipe so that it will extend between 16–24 inches (406–610 mm) past end of combustion air pipe and no more than 6 inches (152 mm) out of box toward heater.

NOTE: The double-wall vent pipe does not attach to the box. The installer must provide support.

   c. Connect 5-inch double-wall vent pipe to 6- or 7-inch single-wall or Category III vent pipe run using tapered reducer (see **Figure 11**).
   d. Ensure that screened exhaust assembly is aligned so that its baffles are positioned at 12, 3, 6, and 9 o'clock (see **Figure 24**). Install screened exhaust in accordance with **Figure 10**.
   e. Ensure that double-wall section of vent pipe has slight downward drop of 1/4-inch per foot (6 mm per 305 mm) toward vent terminal end.
   f. Seal completely around circumference of pipe and opening of box using silicone sealant.
9. Install indoor section of combustion air pipe:
   a. Secure single-wall combustion air pipe run to collar on concentric adapter box using sheet metal screws. If using 7-inch piping, install tapered reducer.
   b. Seal pipe joints with tape or sealant.
10. Verify compliance with **Figure 24** and with all specific venting requirements listed above.

Piping Connections

Gas Supply Pressure

- The unit is equipped for a maximum gas supply pressure of 1/2 psi, 3.5 kPa, or 14 IN WC for natural gas or propane. The minimum supply pressure, as measured while the unit is operating at full fire, is 5 IN WC for natural gas or 11 IN WC for propane.
- Supply pressure higher than 1/2 psi requires the installation of an additional service regulator external to the unit.
- **Pressure testing supply piping:** For test pressures ***above*** 1/2 psi, disconnect the heater and manual valve from the gas supply line to be tested and cap or plug the supply line. For test pressures ***below*** 1/2 psi, before testing, close the manual valve on the heater.

Gas Supply Piping

⚠ DANGER ⚠

- **All components of a gas supply system must be leak tested prior to placing equipment in service. NEVER TEST FOR LEAKS WITH AN OPEN FLAME. Failure to comply could result in personal injury, property damage, or death.**
- **Pipe joint compounds (pipe dope) shall be resistant to the action of liquefied petroleum gas or any other chemical constituents of the gas being supplied.**

⚠ CAUTION ⚠

- **All piping must be in accordance with requirements outlined in the *National Fuel Gas Code* (ANSI/Z223.1, latest edition) or the *Natural Gas and Propane Installation Code* (CSA B149.1, latest edition).**
- **Gas supply piping installation shall conform with good practice and with local codes.**
- **Support gas piping with pipe hangers, metal strapping, or other suitable material. DO NOT rely on the heater to support the gas pipe.**

- The unit is orificed for operation with natural gas having a heating value of 1,000 (±50) BTU per cubic foot or with propane gas having a heating value of 2,550 (±100) BTU per cubic foot. Sizing of gas supply lines depends on piping capacity and is based on cubic feet per hour based on a 0.3 IN WC pressure drop, a 0.6 specific gravity for natural gas at 1,000 BTU per cubic feet, and a 1.6 specific gravity for propane at 2,550 BTU per cubic feet. If the gas at the installation does not meet this specification, consult the factory for proper orificing.
- Variables for sizing gas supply lines are listed in **Table 15**. When sizing supply lines, consider the possibility of future expansion and increased requirements. Refer to the *National Fuel Gas Code* for additional information on line sizing.

Table 15. Gas Supply Line Sizes

Pipe Length (Feet)	Natural Gas					Propane				
	Pipe Diameter (Inches)									
	1	1-1/4	1-1/2	2	2-1/2	1	1-1/4	1-1/2	2	2-1/2
	Cubic Feet per Hour									
20	350	730	1100	2100	3300	214	445	671	1281	2013
30	285	590	890	1650	2700	174	360	543	1007	1647
40	245	500	760	1450	2300	149	305	464	885	1403
50	215	440	670	1270	2000	131	268	409	775	1220
60	195	400	610	1105	1850	119	244	372	674	1129
70	180	370	560	1050	1700	110	226	342	641	1037
80	170	350	530	990	1600	104	214	323	604	976
90	160	320	490	930	1500	98	195	299	567	915
100	150	305	460	870	1400	92	186	281	531	854
125	130	275	410	780	1250	79	168	250	476	763
150	120	250	380	710	1130	73	153	232	433	689
175	110	225	350	650	1050	67	137	214	397	641
200	100	210	320	610	980	61	128	195	372	598

Piping Connections—Continued

Supply Piping Connections

NOTE: The *National Fuel Gas Code* requires the installation of a minimum 3-inch sediment trap with a drip leg. Local codes may require a sediment trap longer than 3 inches (typically 6 inches). To permit burner removal, this sediment trap must extend beyond the edge of the heater.

Connect the gas supply piping as follows (see **Figure 25** and **Figure 26**):

1. Make gas connection (refer to **Table 16** for gas connection sizes) at pipe nipple that extends outside cabinet using ground joint union.
2. Seal opening for gas supply pipe with grommet provided.
3. Install manual shutoff valve upstream of unit control system. Manual shutoff valve's 1/8-inch plugged tapping provides connection for supply line pressure test gauge.
4. Install minimum 3-inch sediment trap (typically 6 inches).
5. Bleed trapped air from gas lines as needed.
6. Leak test all connections using leak detecting solution.

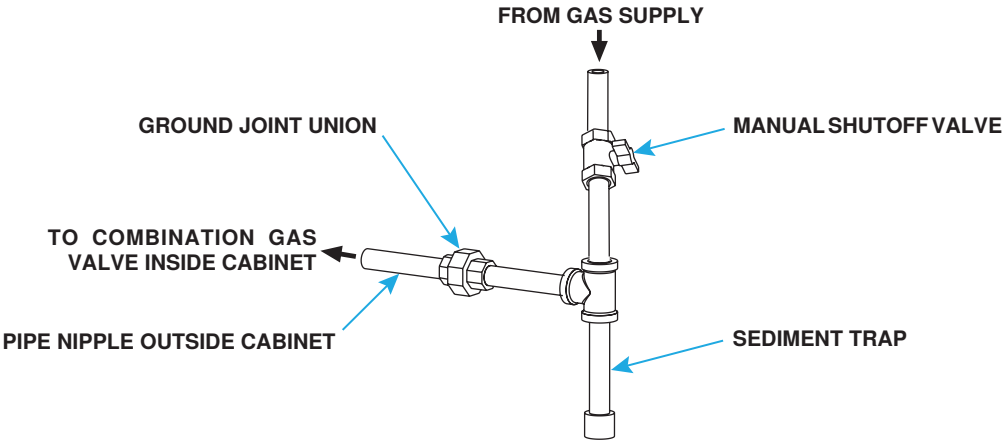

Figure 25. Gas Connections

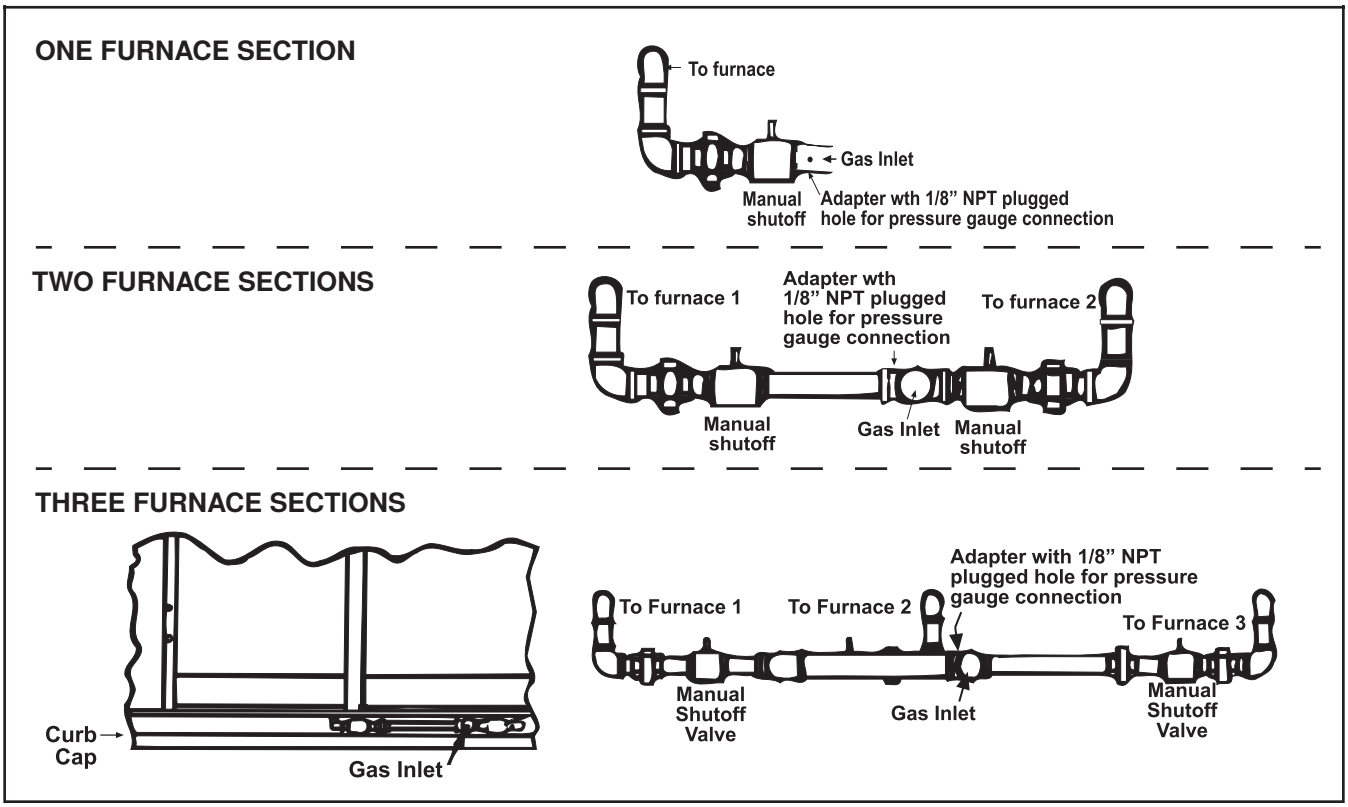

Figure 26. Gas Manifold Arrangements

Table 16. Gas Connection Sizes	
Unit Size (MBTUh)	
400	500–1200
Connection Size (Inches (mm))	
1 (25)	1-1/4 (32)
NOTE: The above are not supply line sizes. They are gas connection sizes for a standard unit.	

Electrical Connections

⚠ CAUTION ⚠

- **Ensure that all wiring is in accordance with the wiring diagram provided with the unit.**
- **All electrical wiring and connections, including electrical grounding MUST BE made by a qualified electrician in strict accordance with the *National Electric Code* (ANSI/NFPA No. 70, latest edition) or, in Canada, the *Canadian Electric Code* (Part 1, CSA C.22.1). In addition, the installer should be aware of any local ordinances or gas company requirements that might apply.**
- **If any of the original wire as supplied with the appliance must be replaced, it must be replaced with wiring material having a temperature rating of at least 220°F (105°C), except for the sensor lead wires, which must be rated at 302°F (150°C).**
- **All external wiring MUST BE within approved conduit and MUST HAVE a minimum temperature rise of 140°F (60°C).**
- **Keep electric and gas supply components clear of service panels.**

NOTE: Electrical options are identified on the wiring diagram. Refer to separate instruction sheets for any optional equipment provided.

Electrical Connections—Continued

Supply Wiring

- Check the rating plate on the heater for the supply voltage and current requirements and ensure that all wiring is in accordance with the wiring diagram provided with the unit.
- Route supply wiring to electrical connection location shown in **Figure 1**.
- A separate line voltage supply with fused disconnect switch should be run directly from the main electrical panel to the unit, making connections in the junction box.
- **Disconnect switch:** A disconnect switch is a required part of this installation. Switches are available as options or parts or may be supplied locally. When ordered as an optional component, the disconnect switch is shipped separately. The disconnect switch may be fusible or non-fusible. When providing or replacing fuses in a fusible disconnect switch, use dual element time delay fuses and size according to 1.25 × maximum total input amps. Ensure that the conduit and switch housing are clear of furnace panels and inspection plates. Allow at least 4 feet (1.2 meters) of service room between the switch and removable panels. Refer to **Table 17** for field-supplied wiring sizes—from disconnect to electrical box—for connection to the motor contactor or starter.

Table 17. Field-Supplied Wiring Sizes

Voltage/Phase	Motor HP	Wire Gauge	BX Cable Size (Inches)
208/1, 230/1	1–2	14	3/8
	3	10	1/2
	5	8	
	7.5	6	1
	10	4	
208/3, 230/3	1–3	14	3/8
	5	12	
	7.5	10	1/2
	10	8	
	15	6	1
	20	4	
460/3	1–7.5	14	3/8
	10	12	
	15	10	1/2
	20	8	
575/3	1–7.5	14	3/8
	10–20	10	1/2

Control Wiring

- Route control wiring to control connection location shown in **Figure 1**.
- **Convenience outlet:** When a convenience outlet (option BC) is included, a separate power supply must be provided to the receptacle. This circuit MUST BE on a ground fault breaker to meet requirements.
- Refer to **Table 18** for amp ratings of optional controls. Refer to **Table 19** for the recommended maximum length and minimum gauge of control wiring.

Table 18. Amp Ratings of 24V Optional Controls

Control	Ampere Rating (Maximum Amps)
Fan control	0.12
Heater	0.14
RBM relay coil	2.00
Contactor coil	0.45
Spark ignition system	0.10
Maxitrol gas control system	0.51
Single-stage gas valve	0.60
Two-stage gas valve	0.60

Table 19. Control Wiring Sizes		
Distance from Unit to Control (Feet (Meters))	Minimum Recommended Wire Gauge (AWG)	Total Wire Length (Feet (Meters))
75 (23)	#18	150 (46)
125 (38)	#16	250 (76)
175 (53)	#14	350 (107)

CONTROLS

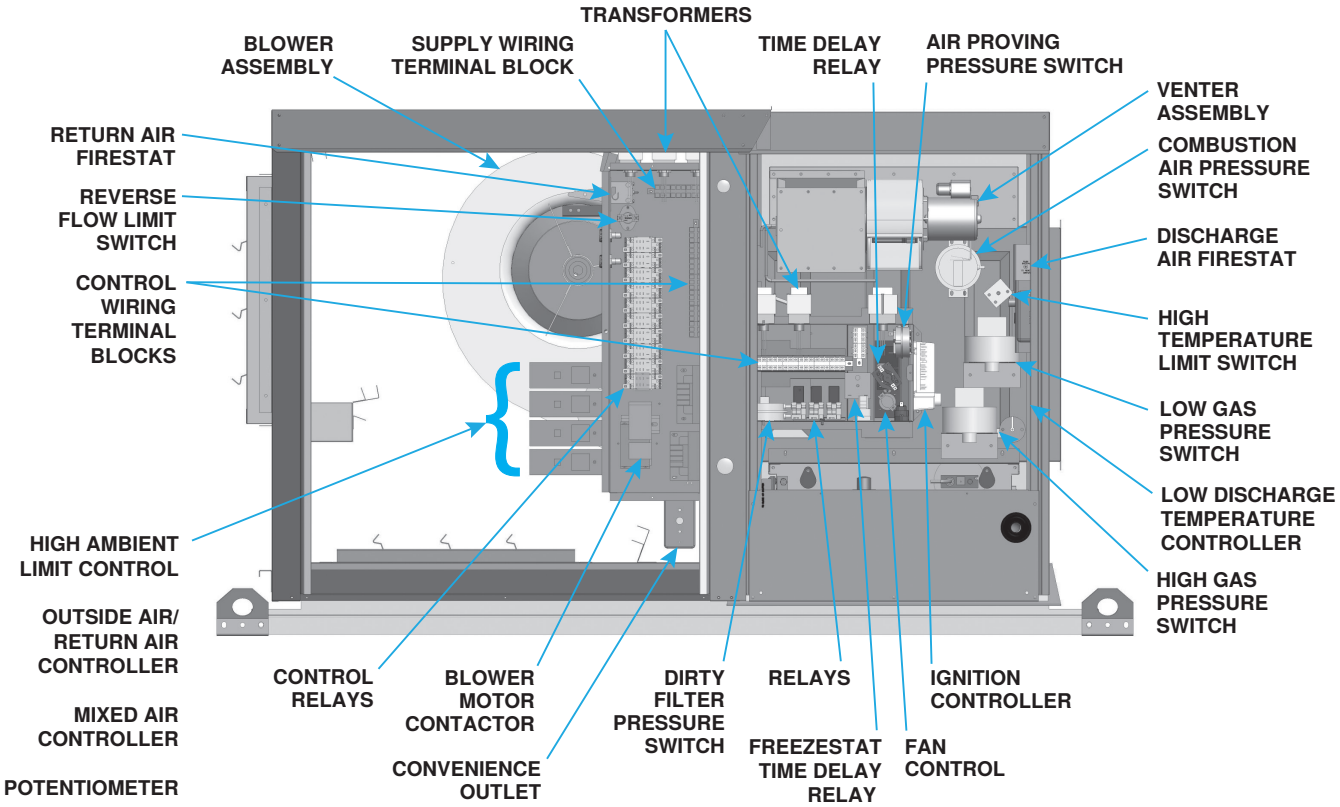

Figure 27. Typical Component Locations

Standard Controls

Combustion Air Proving Switch

⚠ DANGER ⚠

Safe operation requires proper venting flow. Never bypass the combustion air proving switch or attempt to operate the unit without the venter running and proper flow in the vent system. Hazardous conditions could result.

- The combustion air proving switch ensures that proper combustion airflow is available. The switch is a single-pole, double-throw switch that senses pressure caused by the flow of combustion air from the venter. The switch is designed to close when a decreasing pressure is sensed in the outlet duct of the gas collection box.
- At startup when the furnace is cold, the sensing pressure is at the most negative level. As the furnace and the flue system warm up, the sensing pressure becomes less negative. After the system has reached equilibrium (approximately 20 minutes), the sensing pressure levels off. If a restriction or if excessive flue length or turns cause the sensing pressure to become less than the switch setpoint, the pressure switch will function to shut off the main burners. The main burners will remain off until the system has cooled and/or the flue system resistance is reduced. Refer to **Table 20** for approximate water column negative pressure readings and combustion air proving switch setpoints for sea level operating conditions.

Standard Controls—Continued

Combustion Air Proving Switch—Continued

Table 20. Combustion Air Proving Switch Settings at Sea Level Operating Conditions

Option AG39, AG40, AG41, or AG42?	Unit Size (MBTUh)	Factory Setpoint	Startup Cold	Equilibrium
NO	All	−0.63 (±0.05) IN WC	−1.00 IN WC	−0.70 IN WC
YES	400, 500, 600, 800, 1200	−0.75 (±0.05) IN WC	−1.20 (±0.20) IN WC	−0.95 (±0.10) IN WC

Blower Fan Control

NOTE: To replace the blower fan control on units manufactured *before* NOV 2004, a replacement kit (PN 209184) is required.

The blower fan is controlled as follows:

- After the gas valve opens, there is a time delay of blower fan operation to prevent the discharge of cold air.
- Blower fan operation continues after the thermostat is satisfied, as determined by the fan time delay.
- To ensure that the blower fan can continue to operate, the power supply to the furnace MUST NOT be interrupted except for when servicing the unit.

NOTE: If the customer wants the furnace off at night, the gas valve circuit SHOULD BE OPENED by a single-pole switch wired in series with the thermostat. Some thermostats are provided with this feature. Multiple units controlled from a single thermostat are shut off in the same manner. For proper operation, ensure that the blower fan control is wired correctly.

High Temperature Limit Switch

Each furnace is equipped with a non-adjustable high temperature limit switch that shuts off the gas in the event of motor failure, lack of air due to dirty filters, or restrictions at the inlet or outlet of the unit. The furnace farthest downstream in each system is also equipped with a linear-type limit control. The switch is mounted on a bracket on the bottom of the junction box with the capillary sensor extending across the discharge opening of the furnace.

Reverse Flow Limit Switch

The furnace is factory-equipped with an automatic-reset reverse flow limit control. This control is located in the blower compartment, is mounted in the blower junction box adjacent to the blower inlet opening, and is wired in series with the main limit control mounted on the heat exchanger duct side. In case of belt breakage or motor failure, the limit control will be opened by the high temperatures caused by reverse flow from the heat exchanger to the blower compartment, thus breaking the circuit to the automatic electric gas valve and preventing burner operation.

Combination Gas Valve

⚠ WARNING ⚠

The combination gas valve is the prime safety shutoff. To ensure positive closure, all gas supply lines must be free of dirt or scale before connecting them to the unit.

All furnaces are equipped with a 24V combination gas valve that includes the automatic electric ON/OFF valve controlled by the room thermostat, the pressure regulator, the safety pilot valve, and the manual shutoff valve. The standard combination gas valve allows for single-stage control from a single-stage, 24V thermostat.

Pilot and Ignition Systems

⚠ WARNING ⚠

Due to high voltage on the pilot spark wire and pilot electrode, do not touch when energized.

- **Pilot:** The pilot (see **Figure 28**) is a vertical target type with lint-free feature. Pilot flame should be approximately 1-1/4" in length. Pilot gas pressure should be the same as supply line pressure (refer to **Gas Supply Pressure** section). Pilot gas is supplied through the combination valve; the pilot gas flow is controlled by an adjustment screw located in the valve body.

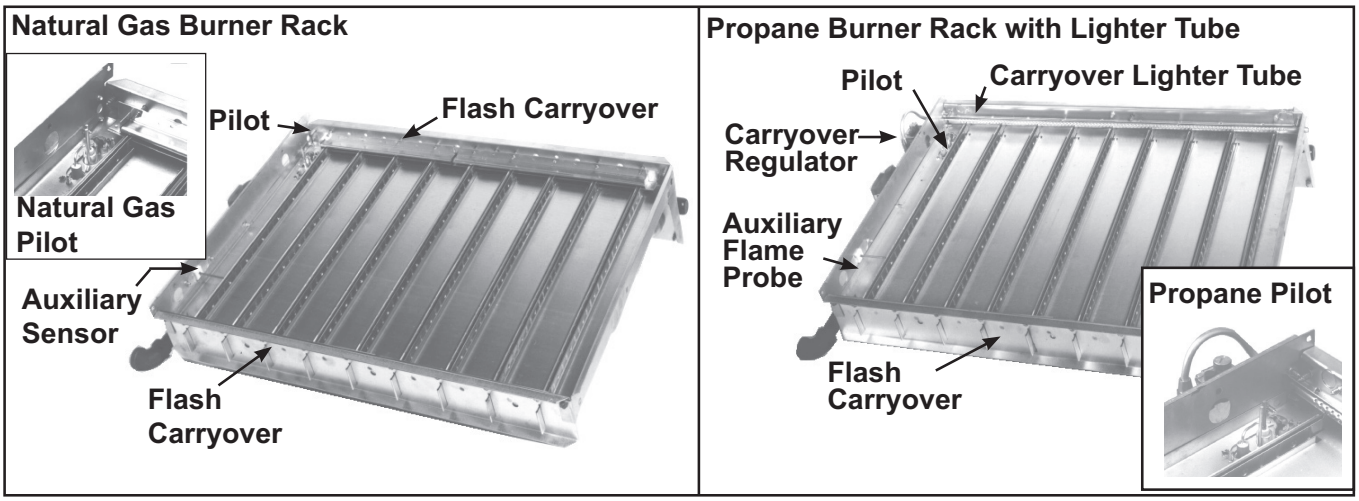

Figure 28. Typical Burner Rack with Pilot

- **Ignition system:** Natural gas units are equipped with a spark-ignited intermittent safety pilot system that shuts off pilot gas flow between heat cycles. Propane units (or as an option on natural gas units) require a lockout device that stops gas flow to the pilot if the pilot fails to light in 120 seconds. This lockout device has a 1-hour retry or requires a manual reset by interruption of the thermostat circuit. Refer to the wiring diagram provided with the unit for pilot system identification and for proper wiring. Spark pilot without lockout is designated as option AH2 or pilot with lockout is option AH3.
- **Ignition controller:** As part of the intermittent safety pilot system, the ignition controller provides high voltage spark to ignite pilot gas and also acts as the flame safety device. After ignition of the pilot gas, the ignition controller electronically senses the pilot flame. A low voltage DC electrical signal is imposed on the separate metal probe in the pilot assembly. The metal probe is electrically insulated from ground. The pilot flame acts as a conduction path to ground to complete the DC circuit and prove pilot flame. Proper operation of the electronic spark ignition system requires a minimum flame signal of 0.2 microamps, as measured by a microampmeter. With pilot flame proven, the ignition controller energizes the main gas valve.

Burners and Carryover System

- **Burners:** These duct furnaces have individually-formed steel burners with accurately die-formed ports to provide controlled flame stability without lifting or flashback with either natural or propane gas. All burners are lightweight and are factory-mounted in an assembly that permits all of the burners to be removed as a unit for inspection or service. During regular service, check the main burner ports and the orifices for cleanliness.

Standard Controls—Continued

Burners and Carryover System—Continued

NOTE: Natural gas burner racks (except when equipped with electronic modulation option AG39, AG40, AG41, or AG42) are equipped with two flash carryovers. Propane gas burners are equipped with one flash carryover and a regulated gas lighter tube system. The carryover lighter tube receives its gas supply through a regulator, simultaneously with the gas to the burner orifices. Heaters are shipped with orifices of proper size and type for gas specified. Natural gas units do not require a carryover orifice.

- **Carryover system:** During regular service, check the carryover system for cleanliness.

Optional Controls

NOTE: Refer to the wiring diagram provided with the unit for proper wiring connections.

Two-Stage Heating Control (Options AG2 and AG11)

The standard combination control valve is replaced with a two-stage combination gas control valve providing for low fire or high fire operation controlled by a two-stage thermostat. The first stage (low fire) is factory-set (not field-adjustable). Both low fire and high fire stages are controlled by a Servo regulator that maintains constant gas input under wide variations in gas supply pressure. Refer to the gas valve literature provided with the unit for gas valve specifications, wiring, and operating instructions.

Two-Stage Makeup Air Control (Options AG3, AG15, and AG17)

NOTE: If the unit has an optional remote HEAT/COOL switch, ensure that HEAT is selected.

On systems with more than one furnace section, there are two methods of achieving multiple-stage makeup air operation. In addition, for each of these methods, there are two types of control mechanisms. The first method is comparable to the two-stage heating units. Instead of control from a two-stage room thermostat, the discharge air temperature is monitored and the two-stage gas valve is controlled by a two-stage ductstat. When the discharge air temperature drops to the setpoint, low fire is energized. If low fire cannot satisfy the ductstat setting, high fire is energized. As the packaged system may include two or three furnace sections, and as each section is equipped with a two-stage gas valve, the operation stages increase with the number of furnace sections. The second method of multiple-stage makeup air operation is applicable only to systems that include two furnace sections. On systems with two furnaces, this optional control system is identified as option AG17. Each furnace in the package is equipped with a single-stage gas valve. The single-stage gas valves are staged by two-stage ductstats. The furnaces are staged in sequence. This concept will achieve two-stage control on packaged systems with two furnaces and three-stage control on systems with three furnaces. Makeup air applications are usually adjusted to maintain discharge air temperature between 65°F (18.3°C) and 75°F (23.9°C). In all applications, the allowable temperature rise of the furnace in the installation dictates the limits of the ductstat temperature setting. Depending on the option selection, the sensor is either connected by capillary tubing to the unit-mounted ductstat or electrically-connected to a remote temperature selector. Refer to the **Discharge Air Temperature Sensor Installation** section for instructions on locating the sensor in the ductwork. Set the ductstat as indicated in **Table 21**.

Table 21. Recommended Settings for Two-Stage Makeup Air Control									
Option	No. of Furnaces	Ductstat Setting*					Temperature Selector Setting**		
		1st	2nd	3rd	4th	Staging Sequence	Setpoint	Differential	Stage Adder Offset
AG3	1	70°F	—			66°F high stage→70°F low stage→ 74°F shutdown	—	—	—
	2	70°F	64°F	—		60°F high stage (both furnaces)→ 64°F low stage (furnace 2)→ 68°F shutdown (furnace 2)→ 70°F low stage (furnace 1)→ 74°F shutdown (furnace 1)			
	3	70°F	66°F	62°F	—	58°F high stage (all furnaces)→ 62°F low stage (furnace 3)→ 66°F shutdown (furnace 3), low stage (furnace 2)→ 70°F shutdown (furnace 2), low stage (furnace 1)→ 74°F shutdown (furnace 1)			
AG15	1	—					74°F	8°F	4°F
	2	—					74°F	14°F	10°F, 6°F, 4°F
	3	—					74°F	16°F	10°F, 8°F, 8°F, 4°F, 4°F
AG17	2	—					74°F	8°F	4°F

*Set each ductstat control in furnace order.

Adjust the setpoint and the differential of the temperature selector (Johnson #A350). Adjust the offset potentiometer on each of the stage adder modules (Johnson #S350). Follow the manufacturer's instructions provided. **IMPORTANT: Set the temperature selector and each stage adder module to HEAT. Follow the wiring diagram to obtain proper sequencing. **Operation:** The differential setting and offset degrees allow the controls to adapt to any adjustment in temperature selection (50–130°F).

- **Ductstat with capillary tubing (option AG3):** The unit-mounted ductstat (see **Figure 29**) has an adjustable range of 0°F to 100°F (–17.8°C to 37.8°C) with a fixed differential of 3°F (1.7°C). The sensor is factory-set at 70°F (21.1°C). Due to different CFM settings and outside air temperatures, the average downstream outlet temperature may not match the ductstat setting exactly. After the installation is complete, adjust the setpoint of the ductstat to achieve the desired average outlet air temperature.

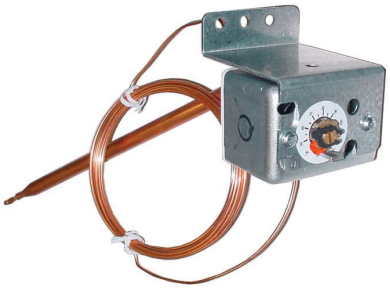

Figure 29. Unit-Mounted Ductstat

- **Ductstat with electronic remote temperature selector (options AG15 and AG17):** Follow the wiring diagram provided with the unit and the manufacturer's instructions for wiring and installing the WiFi-capable remote temperature selector (see **Figure 30**). An expansion module is available as needed. After the installation is complete, adjust the selector to achieve the desired average outlet air temperature.

Figure 30. Remote Temperature Selector

Optional Controls—Continued

Electronic Modulation (Options AG7, AG8, AG9, AG21, AG39, AG40, AG41, and AG42)

NOTE: Unit sizes 400, 700, 800, 1050, and 1200 with electronic modulation require a minimum natural gas supply pressure of 6 IN WC. Options AG39, AG40, AG41, and AG42 are available only with natural gas. A unit size 400 equipped with electronic modulation option AG39 has a 25–100% firing range (4:1 turndown ratio). Option AG41 applies to unit sizes 500, 600, and 800 with two furnaces and to unit size 1200 with three furnaces.

The type and capability of the electronic modulation system depends on the option selected. Depending on the heat requirements established by the thermistor sensor, the burner modulates between 100% and 50% firing. The thermistor is a resistor that is temperature-sensitive in that as the surrounding temperature changes, the Ohms resistance changes through the thermistor. This change is monitored by the solid-state control center (amplifier) that furnishes varying DC current to the modulating valve to adjust the gas input. Each modulating valve is basically a regulator with the electrical means of raising and lowering the discharge pressure. When no DC current is fed to this device, it functions as a gas pressure regulator to supply 3.5 IN WC pressure to the combination gas valve. Refer to the **Discharge Air Temperature Sensor Installation** section for instructions on locating the sensor in the ductwork.

- **Electronic modulation between 50% and 100% firing rate (option AG7):** Electronic modulation for heating that is controlled by a specially-designed room thermostat (60–85°F (15.6–29.4°C)).
- **Electronic modulation between 50% and 100% firing rate (option AG8):** Electronic modulation for makeup air application that is controlled by a duct sensor and temperature selector (55–90°F (12.8–32.2°C)). The temperature selector setting for option AG8 is on the amplifier (see **Figure 31**). Option AG8 is available with an override thermostat.

AMPLIFIER

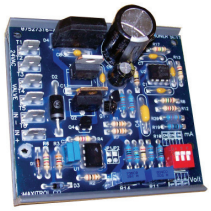

SIGNAL CONDITIONER

Figure 31. Maxitrol Amplifier and Signal Conditioner

NOTE: Control wires connected to a Selectrastat, a discharge air sensor, a remote temperature selector or sensor, an amplifier, or the valve must not be run close to or inside conduit with power or ignition wires. Doing so may cause the unit to function erratically or may destroy the amplifier. If shielded wires are used, shield must be insulated and grounded at the amplifier location only.

- **Electronic modulation between 50% and 100% firing rate (option AG9):** Electronic modulation for makeup air application that is controlled by a duct sensor and temperature selector (55–90°F (12.8–32.2°C)). Option AG9 has a remote temperature selector and an override thermostat.
- **Electronic modulation between 50% and 100% firing rate (option AG21):** With option AG21, the furnace is equipped with a Maxitrol signal conditioner (see **Figure 31**) that operates much the same way as the amplifier above to control the regulator valve. The signal conditioner accepts an input signal of either 4–20 milliamps or 0–10V from a customer-supplied control device such as a computer. With the dip switches on the conditioner positioned to ON, the conditioner accepts a 4–20 milliamp signal. With the dip switches on the conditioner positioned to OFF, the conditioner accepts a 0–10V signal. The conditioner converts the signal to the 0–20V DC current required to control the modulating valve.

- **Electronic Modulation Between 25% and 100% Firing Rate (Options AG39 and AG41):** The furnace closest to the blower is equipped with the electronic modulation option. The other furnace(s) have two-stage burner control from outside air temperature sensors identified as heat stage controllers. Option AG41 provides 6:1 turndown with two furnaces and 8:1 turndown with three furnaces. The furnace will ignite at any input rate in the available range and will maintain average thermal efficiencies equal to or greater than the thermal efficiency at full fire. The gas train (see **Figure 32**) includes a single-stage gas valve, a modulating valve, and two gas pressure switches. The burner rack is equipped with one flash carryover and a regulated gas lighter tube system. The carryover lighter tube receives its gas supply through the regulator simultaneously with the gas to the burner. Control of the system is through a Maxitrol amplifier (see **Figure 31**) with a corresponding remote temperature dial. The gas supply (refer to pressure requirements in **Table 22**) connects to the single-stage gas valve. To compensate for additional pressure loss through the modulating valve, the single-stage gas valve has a custom outlet pressure setting higher than when it is used on a standard gas manifold. The pilot tubing connects to the pilot port on the single-stage gas valve. When the valve receives a call for heat from the amplifier and pilot is established, gas flow from the single-stage valve goes to both the modulating valve and the regulated lighter tube system. When the signal from the amplifier to the modulating valve requires less-than-high fire operation, the modulating valve functions to lessen the gas flow to the burner to reduce the input rate to that which is necessary to maintain the desired temperature. When the input rate is reduced enough to decrease the gas pressure to 1.1 IN WC, the primary gas pressure switch in the manifold activates the gear motor that controls the bypass damper in the venter/combustion air system. The bypass damper opens to divert some of the incoming air directly into the flue duct to reduce air flow through the burner. Safety switches monitor the position of the bypass damper. When the gas pressure rises to >1.1 IN WC, the bypass damper closes. Although the sensor has a mixing tube, at this distance from the discharge it does not receive a true mix, so the temperature read by the sensor will be slightly higher than the actual air entering the ductwork. The system will provide comfort level heat if the selector is set slightly lower to compensate for this reading. The offset temperature will vary with the application. If a direct correlation of these two temperatures is required, move the duct sensor to a location in the ductwork about 10–12 feet (3–3.7 meters) from the furnace discharge. This uniquely-designed modulation system requires combustion air pressure settings different from the standard system. Refer to **Table 20** for the approximate combustion air proving switch settings at sea-level operation. Refer to the **Troubleshooting Bypass Combustion Air Damper Safety Circuit on Units with Option AG39, AG40, AG41, or AG42** section for troubleshooting.

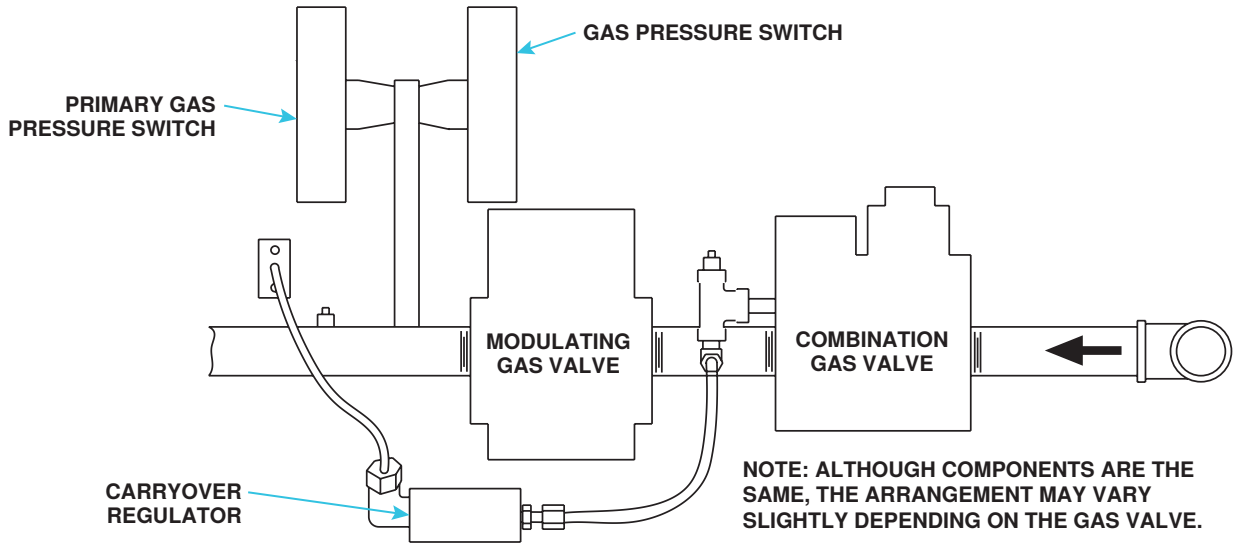

Figure 32. Typical Manifold Arrangement with Electronic Modulation

Table 22. Options AG39, AG40, AG41, and AG42 Pressure Requirements

Unit Size (MBTUh)	Maximum Turndown (%)	Input Range (MBH)	Factory-Set Inlet Pressure to Modulating Valve (IN WC)	Required Gas Supply Pressure (IN WC)
500	28	69–250	4.0	5.0
600	23	69–300	4.0	5.0
400, 800, 1200	25	100–400	4.4	6.0

Optional Controls—Continued

Electronic Modulation (Options AG7, AG8, AG9, AG21, AG39, AG40, AG41, and AG42)—Continued

- **Electronic modulation between 25% and 100% firing rate (options AG40 and AG42):** The furnace is equipped with a Maxitrol signal conditioner (see **Figure 31**) that receives an input signal of either 4–20mA or 0–10V from a customer-supplied control device such as a computer. With the dip switches on the conditioner positioned to ON, the conditioner accepts a 4–20mA signal. With the dip switches on the conditioner positioned to OFF, the conditioner accepts a 0–10V signal. The conditioner converts the signal to the 0–20V DC current required to control the modulating valve. The furnace functions and is equipped in the same way as options AG39 and AG41 except that with computer control, the temperatures are selected through the software and there is no temperature selector or duct sensor. This uniquely-designed modulation system requires combustion air pressure settings different from the standard system. Refer to **Table 20** for the approximate combustion air proving switch settings at sea-level operation. Refer to **Table 22** for pressure requirements. Refer to the **Troubleshooting Bypass Combustion Air Damper Safety Circuit on Units with Option AG39, AG40, AG41, or AG42** section for troubleshooting.

Dampers and Damper Controls (Options AR1, AR4, AR6, AR8, AR18, AR23, and AR25)

- For specific damper control options (see **Figure 33**), refer to the wiring diagram provided with the unit. To adjust dampers, refer to the **Damper Linkage Adjustment** section.

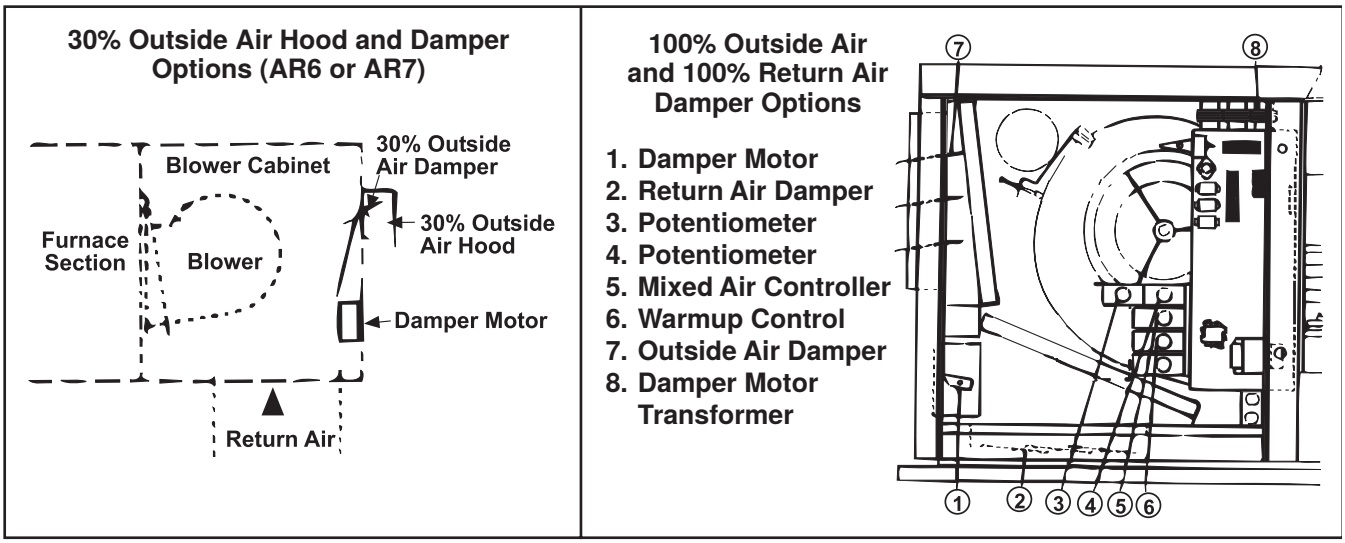

Figure 33. Damper Controls

- The pressure null switch used to control outside air dampers in inlet air option AR23 is a Dwyer #1640-0 with a range of 0.01–0.20 IN WC. It is shipped separately for-field installation—refer to the manufacturer's installation instructions included with the switch. The pressure null switch is a diaphragm-operated differential pressure switch used in makeup air applications to control building pressure. It maintains a selected positive or negative pressure setpoint by changing the amount of outside air being introduced to the building through the modulating outside air dampers. As more pressure is required in the building, the pressure null switch activates the damper motor driving the outside air damper towards the full open position and the recirculated air damper towards the closed position. Conversely, as less pressure is required, the switch drives the dampers in the opposite direction. Install the switch as follows:

  a. Select indoor location free from excessive vibration where oil or water will not drip onto switch and where ambient temperature is –30°F (–34.4°C) (dry air) et 110°F (43.3°C).

  b. Mount switch with diaphragm in vertical plane. Switch is position-sensitive and is calibrated to operate properly when diaphragm is vertical. Mount switch securely.

c. Connect pressure taps on top of switch to sources of air pressure differential. Metal tubing with 1/4-inch OD is recommended, but any tubing system that does not unduly restrict air flow may be used. To maintain positive building pressure, vent low pressure tap to outdoors and allow high pressure tap to monitor building pressure. To maintain negative building pressure, reverse functions of high and low pressure taps. In either case, ensure that outdoor vent is protected from wind and is screened from insects.

d. Refer to wiring diagram provided with unit to make electrical connections.

e. Adjust switch (refer to **Pressure Null Switch Adjustment** section).

Dirty Filter Switch (Option BE18)

The optional dirty filter pressure switch is used to provide warning to the user by energizing an indicator light on an optional remote console. The light indicates that the filters are in need of cleaning or changing. The adjustable, single-pole/normally-open differential switch closes when an increase in pressure differential above the setpoint, is sensed across the filter bank. The dirty filter switch is located in the furnace section. To adjust the dirty filter switch, refer to the **Dirty Filter Switch Adjustment** section.

Airflow Proving Switch (Makeup Air with Option BW1)

The optional airflow proving switch ensures that the circulating air blower provides an adequate amount of airflow prior to the unit being fired. The switch is a single-pole/normally-open device that closes when an increase in pressure above the setpoint is sensed in the circulating air blower. The switch is located in the blower junction box. Contacts are set to close at 0.26 IN WC (maximum).

Space Temperature (Option D19) or Makeup Air (Option D21) Control

Space temperature or makeup air control is achieved with a unit-mounted 24V factory-programmed system controller mounted in its own watertight compartment (see **Figure 34**). Some controller features are programmable (refer to the D19-D21 controls manual provided with the unit and found at **www.reznorhvac.com**). Some sensors are standard; others depend on option selection. If a sensor needs to be replaced, use only a factory-authorized replacement. If a controller needs to be replaced, it must be replaced with the same model and software. Contact your Distributor or Reznor service for additional support.

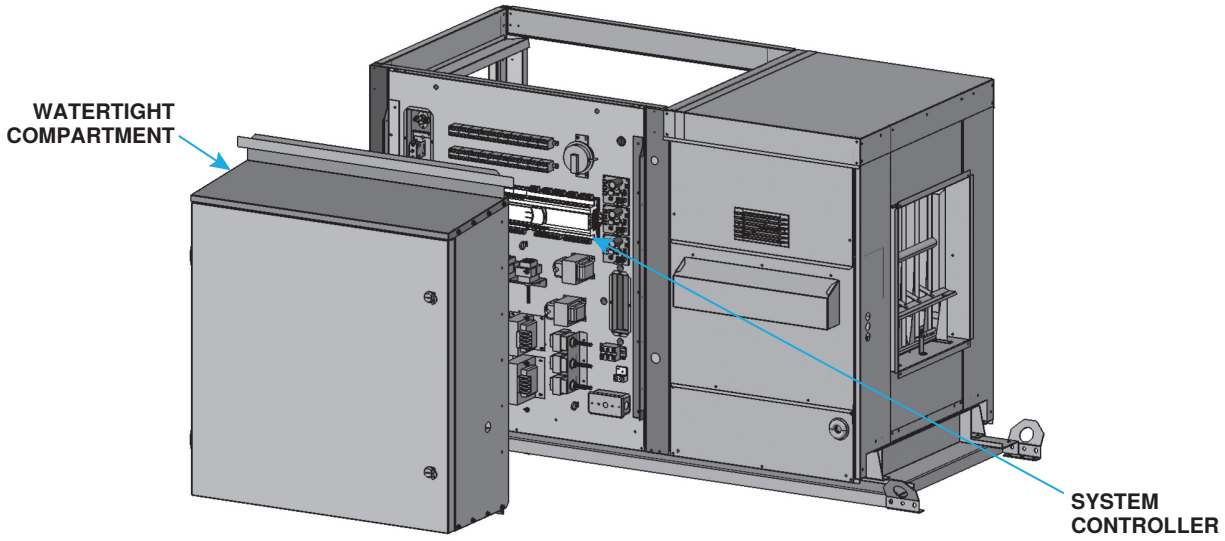

Figure 34. System Controller Used with Options D19 and D21

Photoelectric Air Duct Smoke Detector (Option SA1)

The smoke detector (see **Figure 35**) is designed to sense the presence of smoke in the air duct system so that appropriate action can be taken to shut off fans and blowers to facilitate the management of toxic smoke and fire gases throughout the areas served by the duct system. The smoke detector is field-installed in accordance with the manufacturer's instructions provided with the detector.

Optional Controls—Continued

Photoelectric Air Duct Smoke Detector (Option SA1)—Continued

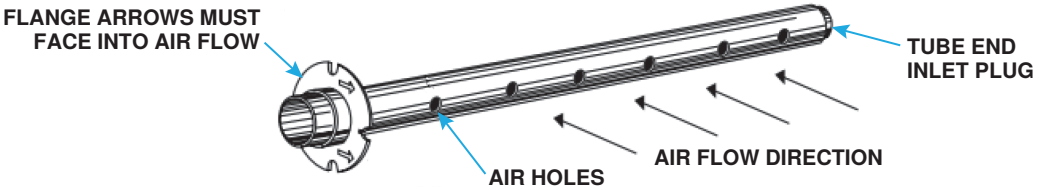

Figure 35. Air Duct Smoke Detector Sampling Tube

Variable Frequency Drive (Option VFD1 or VFD2)

NOTE: VFD1 is factory-installed. VFD2 ships separately and must be field-installed indoors.

- When an optional variable frequency drive is ordered, the motor operates on two speeds as determined by the electrical frequency. High speed is used for cooling and low speed for heating. 60 Hertz is the maximum high speed. Maximum speed for low speed heating is the frequency that will provide the maximum temperature rise of the heater. Speeds must be within the temperature rise range of 30–90°F (1–32°C).
- Follow the variable frequency controller manufacturer's instructions that are packaged with the heater (in the owner's envelope) to program the variable frequency drive settings. The formula for motor speed is $N = 120 \times f/p$ where N = speed, f = frequency, p = number of poles, a 3,600-RPM motor has two poles, and an 1800-RPM motor has four poles. For example, for an 1,800-RPM motor at 60Hz, $N = 120 \times 60/4 = 1800$ (1,800 = synchronous speed, assume 2% slip).
- The motor will run between 1,750 and 1,790 RPM at full load depending on design. For the same motor run at 45Hz, **120 × 45/4 = 1350** (1,350 RPM less 2% slip = about 1,300 RPM).

Thermostat

⚠ CAUTION ⚠

Ensure that the thermostat has an adequate VA rating for the total requirements. Add the coil rating of all relays and match the thermostat rating.

NOTE: If the low-voltage thermostat is equipped with a heat anticipator, set the anticipator at full load control amps.

- A thermostat is not standard equipment but is an installation requirement. Use either an optional thermostat available with the system or a field-supplied thermostat. Install according to the thermostat manufacturer's instructions.
- A 24V thermostat must be used to actuate low voltage gas controls. If line voltage from the thermostat to the unit is desired, consult the factory representative. Thermostats should be located 5 feet (1.5 meters) above the floor on an inside wall, not in the path of warm or cold air currents and not in corners where air may be pocketed. Do NOT install on cold air walls. For specific connection details, refer to instruction packet with the thermostat. If more than one furnace is cycled from one thermostat, separately activated relays must be substituted at unit thermostat connections.

OPERATION

⚠ WARNING ⚠

To ensure safety, follow the lighting instructions located on the outlet box cover.

Pre-Startup Checklist

- ❑ Ensure that suspension, mounting, clearances, and duct and venting connections are in accordance with **INSTALLATION** section.
- ❑ Ensure that flue discharge and combustion air openings are free from obstructions.
- ❑ Ensure that gas supply pipe openings are sealed.
- ❑ Ensure that electrical supply is in accordance with voltage rating on unit's rating plate.
- ❑ Ensure that all field wiring is in accordance with wiring diagram and that wire gauges are as required for electrical load.
- ❑ Ensure that fuses or circuit breakers are in place and are sized correctly.
- ❑ Ensure that clearances from combustibles are in accordance with **Clearances** sections).
- ❑ On units with option AG41 or AG42, ensure that heat stage controllers are set.
- ❑ Check blower pulley and motor pulley to ensure that they are secure to their shafts. Check belt tension and alignment. Check blower rotation (refer to **Belts, Blowers, and Drives** section).
- ❑ On units with optional dampers, ensure that damper linkage is in accordance with **Damper Linkage Adjustment** section.
- ❑ Check piping for leaks and proper gas line pressure and bleed trapped air from gas lines (refer to **Supply Piping Connections** section):
  - a. Turn OFF manual shutoff valve.
  - b. Turn ON gas supply.
  - c. Observe gas meter for movement or attach pressure gauge readable to 0.1 IN WC and, after turning gas ON for 10 seconds, turn OFF gas supply—no change in pressure should occur over 3-minute period.
  - d. If step c indicates leak, locate leak by brushing soapy solution on all fittings—bubbles will appear at any leaks.
  - e. Repair any leaks and repeat test.

Startup

1. Close all panels tightly.
2. Turn ON electric and gas supply to furnace.
3. Adjust thermostat or ductstat so that call for heat exists.
4. Observe for complete sequencing of safety pilot and ignition (refer to **Table 23**).

Table 23. Sequence of Operation

Step	Action	Observe
1	Set thermostat at its lowest setting	
2	Turn ON electric and main and manual gas valves	
3	Set thermostat at desired setting—thermostat calls for heat	Venter motor is energized after 15-second (approximate) time delay
		Venter flow switches from NC to NO contacts to energize pilot gas valve and spark gap to produce pilot flame on each operating cycle
		Sensing probe proves presence of pilot flame and energizes safety switch portion of control to de-energize spark gap and energize main valve
		Main gas ignites and unit fires at full rate
4	If flame is extinguished during main burner operation, safety switch closes main valve and recycles spark gap	On unit equipped with controller with lockout, if pilot is not established within 120 seconds (approximately), unit locks out for 1 hour unless reset by interrupting power to control circuit
		Blower motor operates from fan time delay
5	Thermostat is satisfied	Solenoid gas valve, pilot gas valve, and ignition controller de-energized
		Time delay relay keeps venter motor on for approximately 90 seconds (post-purge)
6	To shut down, set thermostat to lowest setting	Blower motor remains on as determined by fan time delay

Post-Startup Checklist

- ❑ Observe burner flame at full fire. Natural gas flame should be about 1-1/2 inches in height with blue coloring. Propane gas flame should be approximately same height with blue coloring. Yellow tipping may appear on propane gas. If yellow extends beyond 1/2- to 3/4-inch, adjust air shutters (refer to **Burner Air Shutter Adjustment** section). If shutter adjustment does not reduce yellowing, check for gas leaks at control manifold or orifice fitting.
- ❑ Turn unit OFF and ON, pausing 2 minutes between each cycle. Observe to verify smooth ignition. On two-stage or modulating burner systems, manipulate temperature adjustment slowly up and down to see if control is sequencing or modulating properly. Raising temperature setting drives burner on or to full fire.
- ❑ Using manometer or slant gauge readable up to 14 IN WC, check orifice manifold for operating pressure on full fire. Natural gas should be 3.5 IN WC at this point. Propane gas should be 10 IN WC at this point. Variations from these pressures are not recommended as ignition and efficiency performance can be adversely affected by improper pressure adjustment (refer to **Measure and Adjust Manifold (Outlet) Gas Pressure** section).
- ❑ If system is equipped with optional dirty filter switch, refer to **Dirty Filter Switch Adjustment** section for instructions to set switch.
- ❑ Place owner's envelope containing Limited Warranty Card, this manual, and any optional information in accessible location near heater. Follow instructions on envelope.

⚠ DANGER ⚠

- **The gas burner in this gas-fired equipment is designed and equipped to provide safe, controlled, complete combustion. However, if the installation does not permit the burner to receive the proper supply of combustion air, complete combustion may not occur. The result is incomplete combustion, which produces carbon monoxide, a poisonous gas that can cause death.**
- **For SSCBL models, safe operation of separated-combustion, indirect-fired gas burning equipment requires a sealed, properly-operating vent system that vents all flue products to the outside atmosphere. FAILURE TO PROVIDE PROPER VENTING WILL RESULT IN A HEALTH HAZARD THAT COULD CAUSE SERIOUS PERSONAL INJURY OR DEATH.**
- **For SSCBL models, install either the horizontal (see Figure 24) or vertical (see Figure 17) combustion air/vent system using the concentric adapter provided. Always comply with the combustion air requirements in the installation codes and instructions.**
- **Combustion air at the burner should be regulated only by manufacturer-provided equipment. NEVER RESTRICT OR OTHERWISE ALTER THE SUPPLY OF COMBUSTION AIR TO ANY HEATER. CHECK THE COMBUSTION AIR/VENT SYSTEM FOR SOUNDNESS AND FUNCTION AND MAINTAIN IT IN PROPER OPERATING CONDITION.**

ADJUSTMENTS

Belts, Blowers, and Drives

Checking and Adjusting Belt Tension

- Proper belt tension is important to the long life of the belt and motor. A loose belt will cause wear and slippage. Too much tension will cause excessive motor and blower bearing wear. Check belt tension as shown in **Figure 36**.
- If the belt cannot be depressed 3/4 inches (19 mm), as shown in **Figure 36**, adjust the belt tension as follows:
  a. Ensure that belt is aligned in pulley grooves properly and is not angled from pulley to pulley.
  b. Loosen adjusting screw locknut on motor base and turn adjusting screw until belt can be depressed 3/4 inches (19 mm).
  c. When correct belt tension is achieved, retighten adjusting screw locknut.

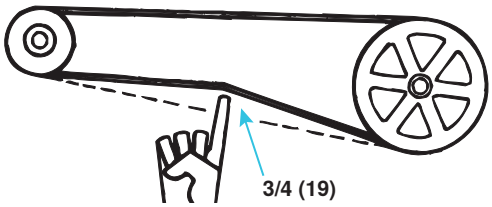

Figure 36. Checking Belt Tension

Adjusting Blower Speed

- Blower speed may be adjusted to achieve the desired outlet temperature as long as the adjustment is within the temperature rise and static pressure limits shown on the furnace rating plate. Motors are factory-set between maximum and minimum blower speeds.
- If the duct resistance is low, the blower may deliver too high an air volume. If the resistance is very low, the blower may deliver excess air to overload the motor, causing the overload protector to cycle the motor. Reducing the blower speed will correct these conditions. If ductwork is added to an installation, it may be necessary to increase the blower speed. Decreasing blower speed increases outlet temperature. Increasing blower speed decreases outlet temperature.
- The system is set at the factory for the RPM required to meet the CFM and external static pressure specified on the order. If estimated external static pressure is incorrect, or changes were made to the duct system, the blower RPM may have to be adjusted. Motors are equipped with adjustable pitch pulleys that permit adjustment of blower speed.
- Adjust the blower speed as follows:
- To make adjustments to units with a <5-HP motor:

  a. Shut OFF gas and electric power.

  b. Loosen belt tension and remove belt.

  c. For units with <5-HP motor:

     (1) Loosen setscrew on side of pulley away from motor.

     (2) To increase blower speed and decrease outlet temperature, turn adjustable half of pulley inward. To decrease blower speed and increase outlet temperature, turn adjustable half of pulley outward. One turn of pulley changes speed 8–10%.

     (3) Tighten setscrew on flat portion of pulley shaft.

  d. For units with ≥5-HP motor:

     (1) Loosen but do not remove two locking screws that are directly across from each other on outer locking ring.

     (2) Adjust sheave to desired pitch diameter by turning outer locking ring. One complete turn of outer locking ring results in 0.233-inch change in pitch diameter. Increase diameter to decrease blower speed or decrease diameter to increase blower speed.

⚠ CAUTION ⚠

Sheaves should not be adjusted in either direction to the point where movable and stationary flanges are in contact.

     (3) After completing adjustment, tighten both locking screws on outer locking ring.

  e. Replace belt and adjust belt tension in accordance with **Checking and Adjusting Belt Tension** section.

  f. Turn ON gas and electric power and light heater in accordance with instructions on lighting instruction plate.

  g. Check motor amps using ammeter. Maximum motor amp rating on motor nameplate must not be exceeded.

  h. When adjustment is complete, check for proper operation.

Belts, Blowers, and Drives—Continued

Checking and Adjusting Belt Tension—Continued

- At final adjustment, amperes should not exceed motor nameplate amp rating. The installation must be adjusted to obtain a temperature rise within the range specified on the furnace rating plate.

NOTE: Some blower pulleys require the use of a split taper bushing in the blower pulley. These split taper bushings must be loosened in order to remove the pulley.

- If it is necessay to remove a blower pulley, follow these instructions to loosen the bushing:
  a. Note that there are three capscrews in bushing and two holes without screws called push-off holes (see **Figure 37**). Remove three capscrews.
  b. Insert two capscrews into two push-off holes and tighten evenly until pulley is loosened.
  c. Pulley may now be removed from shaft.

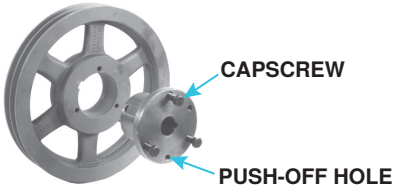

Figure 37. Split Taper Bushing

Reversing Blower Rotation

Each blower housing is marked for proper rotation. Rotation may be changed on single-phase motors by rewiring in the motor terminal box. Rotation may be changed on three-phase motors by interchanging two wires on the three-phase supply connections.

Motor Load and Amp Adjustment

- Amps may be adjusted downward by reducing blower RPM or by increasing duct system static pressure. Use an ammeter to check blower motor amps.
- See the motor rating plate for exact motor specifications. Do not exceed the amp rating on the motor nameplate.
- Venter motor amps for a 115V or 575V unit = 1.5A. Venter motor amps for a 208V, 230V, or 460V unit = 0.8A.
- **Table 24**, which lists the Full Load Amps (FLA) of blower motors (open) based on Horsepower (HP) and Voltage (V), can be used for sizing line wiring but should not be interpreted as the exact motor amps.

Table 24. FLA of Blower Motors (Open, Single-Speed, Average Values)

Voltage/Phase	HP								
	1	1-1/2	2	3	5	7-1/2	10	15	20
	FLA								
208/1	7.2	10.1	11.3	13.7	28.0	—			
230/1	6.5	9.1	10.2	12.4	26.0	32.0	38.0	—	
208/3	3.6	5.8	7.3	9.3	14.6	23.2	28.8	42.0	55.3
230/3	3.2	5.2	6.6	8.4	13.2	21.0	26.0	38.0	50.0
460/3	1.6	2.6	3.3	4.2	6.6	10.5	13.0	19.0	25.0
575/3	1.3	2.1	2.6	3.4	5.3	8.4	10.4	15.2	20.0

Adjust Heat Stage Controllers (Option AG41 or AG42)

NOTE: Unit sizes 500, 600, and 800 with two furnace sections have two heat stage controllers. Unit size 1200 with three furnace sections has four heat stage controllers.

Units with option AG41 and AG42 have heat stage controllers that control operation of the two-stage furnace based on outside air temperature setpoints. Proper setpoints are important to ensure that the modulating furnace (**Heat Stage 1**) is always in control and avoids cycling. The proper setpoint for each controller must be determined from basic design information as follows:

1. Calculate controller settings:
   a. For **Heat Stage 2** and **Heat Stage 3** in system with two furnace sections, use following formulas in which **T_{SP} = setpoints of heat stage controllers (T_{SP2} and T_{SP3})**, **T_{SA} = desired supply air temperature**, and **T_D = design (minimum) entering air temperature**:

$$\textbf{Setpoint for heat stage 2: } T_{SP2} = T_{SA} - 0.46\,(T_{SA} - T_D)$$

$$\textbf{Setpoint for heat stage 3: } T_{SP3} = T_{SA} - 0.73\,(T_{SA} - T_D)$$

EXAMPLE: With 3,600 CFM, power-vented, 100% outside air, –10°F outdoor winter design, and 75°F desired supply air:

$$T_{SP2} = 75 - [0.46 \times (75 - (-10))] = 75 - (0.46 \times 85) = 35.9$$

$$T_{SP3} = 75 - [0.73 \times (75 - (-10))] = 75 - (0.73 \times 85) = 12.9$$

Set Heat #2 controller to 36°F

Set Heat #3 controller to 13°F

   b. For **Heat Stage 2**, **Heat Stage 3**, **Heat Stage 4**, and **Heat Stage 5** in system with three furnace sections, use the following formulas in which **T_{SP} = setpoints of heat stage controllers (T_{SP2}, T_{SP3}, T_{SP4}, and T_{SP5})**, **T_{SA} = desired supply air temperature**, and **T_D = design (minimum) entering air temperature**:

$$\textbf{Setpoint for heat stage 2: } T_{SP2} = T_{SA} - 0.30\,(T_{SA} - T_D)$$

$$\textbf{Setpoint for heat stage 3: } T_{SP3} = T_{SA} - 0.49\,(T_{SA} - T_D)$$

$$\textbf{Setpoint for heat stage 4: } T_{SP4} = T_{SA} - 0.65\,(T_{SA} - T_D)$$

$$\textbf{Setpoint for heat stage 5: } T_{SP5} = T_{SA} - 0.82\,(T_{SA} - T_D)$$

EXAMPLE: With 8,850 CFM, power-vented, 100% outside air, –10°F outdoor winter design, and 75°F desired supply air:

$$T_{SP2} = 75 - [0.30 \times (75 - (-10))] = 75 - (0.30 \times 85) = 49.5$$

$$T_{SP3} = 75 - [0.49 \times (75 - (-10))] = 75 - (0.49 \times 85) = 33.3$$

$$T_{SP4} = 75 - [0.65 \times (75 - (-10))] = 75 - (0.65 \times 85) = 19.8$$

$$T_{SP5} = 75 - [0.82 \times (75 - (-10))] = 75 - (0.82 \times 85) = 5.3$$

Set Heat #2 controller to 49°F

Set Heat #3 controller to 33°F

Set Heat #4 controller to 20°F

Set Heat #5 controller to 5°F

2. Locate heat stage controllers marked **Heat #2** and **Heat #3** (for two furnaces) or **Heat #2**, **Heat #3**, **Heat #4**, and **Heat #5** (for three furnaces) in inlet air section.

NOTE: The same type of controller may also be used as the optional high ambient limit control (option BN2) and as the mixed air controller that is part of air control option AR15.

3. Adjust each controller to setpoint as determined by calculation in step 1.

Pressure Null Switch Adjustment

NOTE: IMPORTANT: To eliminate shipping damage to the pressure null switch contacts, the manufacturer reduced the span adjustment to zero before shipping.

The span should be adjusted prior to using the pressure null switch (see **Figure 38**) as follows:

1. If switch has been installed, disconnect vent tube so that switch is in neutral position.
2. Remove electrical box cover and, while observing contacts, turn span adjustment screw slowly in clockwise direction.
3. Continue turning adjustment screw until you are able to see gaps between common and both low and high contacts—minimum gap provides greatest sensitivity—wider gap provides lower sensitivity. HIGH actuation point of switch is indicated on calibrated scale secured to transparent range screw enclosure. Building pressure is set by turning adjustment screw. LOW actuation point is set by adjusting span of null by turning span adjustment screw. Span range is 0.01 to 0.03 IN WC.

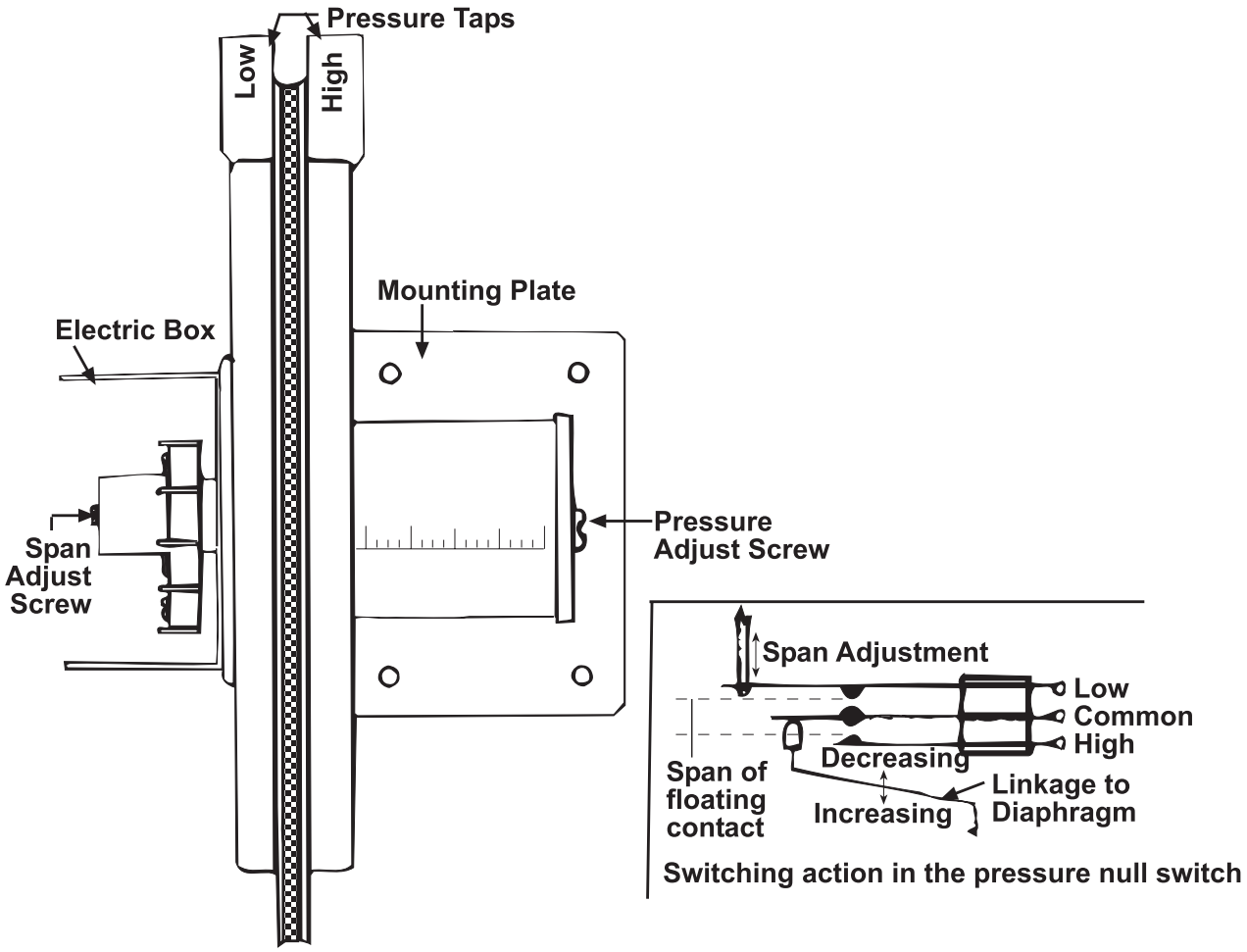

Figure 38. Pressure Null Switch Adjustment

Damper Linkage Adjustment

When units are equipped with dampers, the dampers are closed during shipment. When there are both return air and outside air dampers, the return damper linkage (see **Figure 39**) must be adjusted prior to use as follows:

1. Loosen setscrew on return air damper rod at damper arm.
2. Manually open return air dampers. While dampers are opening, damper rod and arm will automatically move to their correct positions.
3. Tighten setscrew.

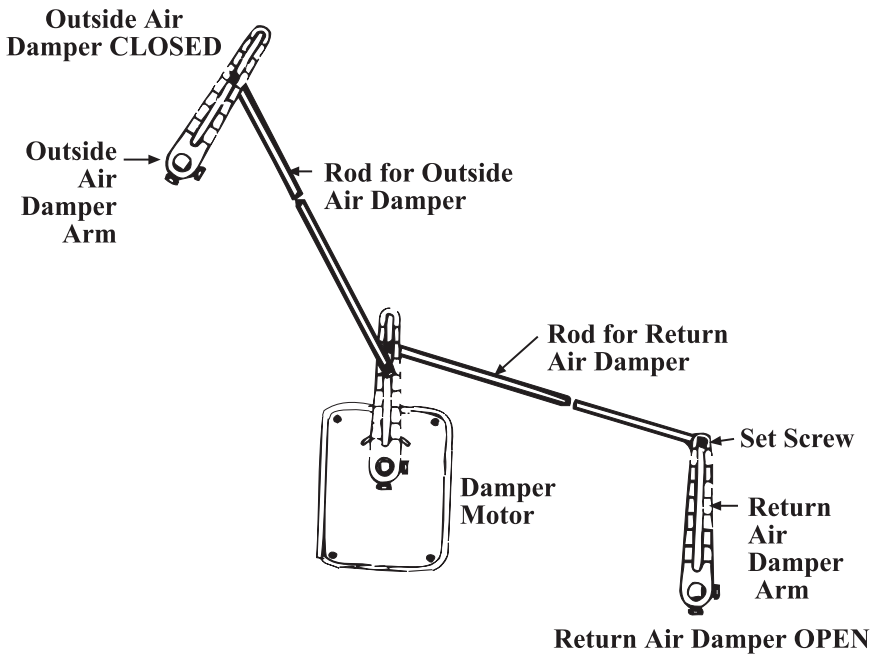

Figure 39. Damper Linkage

Dirty Filter Switch Adjustment

After the unit is started but before continuous operation, the dirty filter switch must be set as follows:

1. With clean filters in place, blower doors closed, and blower operating, decrease pressure setting by adjusting setscrew on switch (see **Figure 40**) clockwise until indicator light is energized or setscrew is bottomed out.
2. At that point, adjust setscrew three full turns counterclockwise or until setscrew is top-ended.
3. At that setpoint, indicator light will be activated at approximately 50% filter blockage.

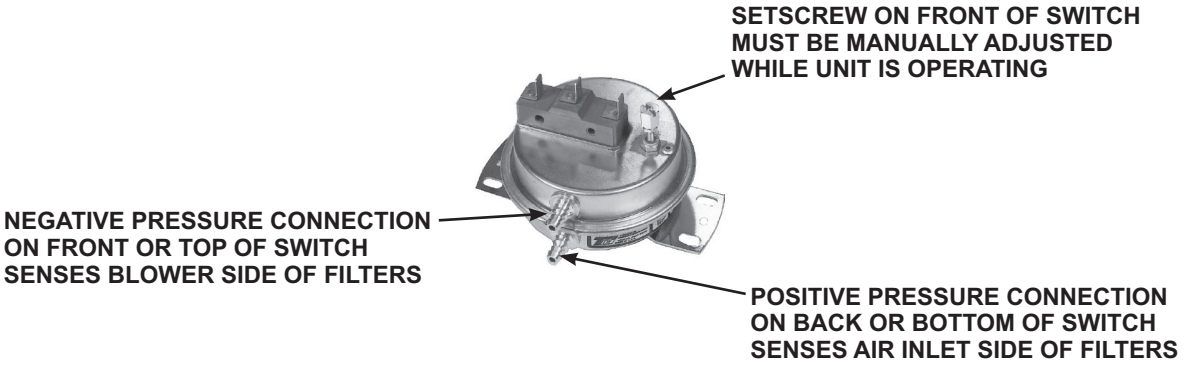

Figure 40. Dirty Filter Switch

Measure and Adjust Manifold (Outlet) Gas Pressure

NOTE: Always check the rating plate for minimum gas supply pressure.

Measuring manifold gas pressure cannot be done until the heater is in operation. Requirements vary based on size of burner and the gas control option. Most units require a minimum of 5 IN WC natural gas as stated above, but sizes 400, 700, 800, 1050, and 1200 with electronic modulation require a minimum of 6 IN WC natural gas supply pressure.

- **For natural gas:** When the heater leaves the factory, the combination valve is set so that the outlet gas pressure of a single-stage valve or high fire of a two-stage valve is regulated to 3.5 IN WC. Low fire on a two-stage valve is set to 1.8 IN WC. Inlet supply pressure to the valve must be a minimum of 5 IN WC or as noted on the rating plate and a maximum of 14 IN WC.
- **For propane gas:** When the heater leaves the factory, the combination valve is set so that the outlet gas pressure of a single-stage valve or high fire of a two-stage valve is 10 IN WC. Low fire on a two-stage valve is set to 5 IN WC. Inlet pressure to the valve must be a minimum of 11 IN WC and a maximum of 14 IN WC.

⚠ WARNING ⚠

- **Manifold gas pressure must never exceed 3.5 IN WC for natural gas or 10 IN WC for propane gas.**
- **Before attempting to measure or adjust manifold gas pressure, the inlet (supply) pressure must be within the specified range for the gas being used, both when the heater is in operation and when it is on standby. Incorrect inlet pressure could cause excessive manifold gas pressure immediately or at some future time.**

NOTE: A manometer (fluid-filled gauge) with an inches water column scale is recommended.

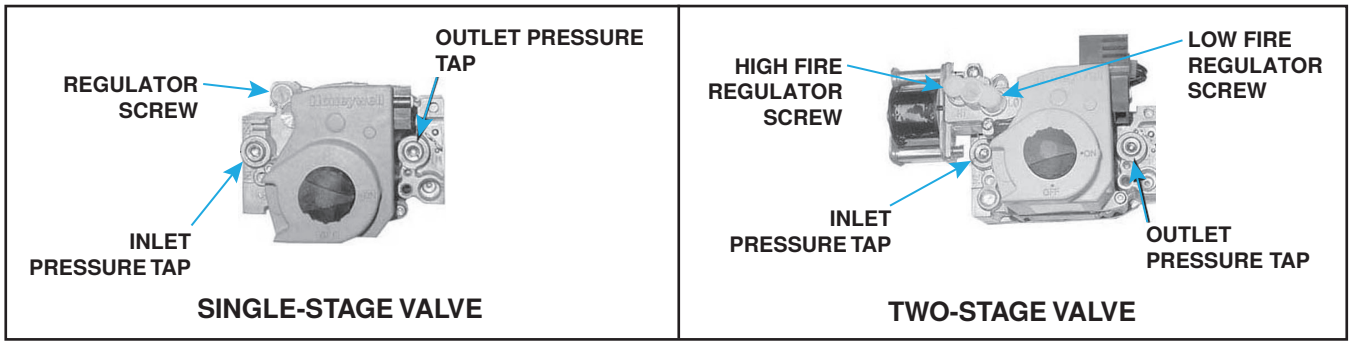

1. With manual valve (on combination valve) positioned to prevent flow to main burners, connect manometer to outlet pressure tap (see **Figure 41**) on valve.

Figure 41. Combination Gas Valves

2. To measure low stage pressure on units equipped with two-stage valve, disconnect wire from HI terminal on valve. Open valve and operate heater and observe manometer reading. Be sure to reconnect wire.

⚠ CAUTION ⚠

DO NOT bottom out the gas valve regulator screw. This can result in excessive overfire and heat exchanger failure due to unregulated manifold pressure.

3. Normally, adjustments to factory-preset regulator should not be necessary. If adjustment is necessary, set pressure to correct settings by turning regulator screw (see **Figure 41**) IN (clockwise) to increase pressure or OUT (counterclockwise) to decrease pressure. Consult valve manufacturer's literature provided with furnace for more detailed information.
4. When manometer reading indicates that outlet pressure is correct, disconnect manometer and install cap(s) on regulator screw(s).

High-Elevation Conversion

NOTES:

- **High-elevation (>2,000 feet (>609 meters)) application with this unit depends on the installation elevation and the heating value of the gas. At high elevations, the heating value of natural gas is always lower than the heating value at sea level.**
- **Deration is necessary to compensate for low atmospheric pressure at high elevations. Generally this will require obtaining the gas heating value from the local gas utility and replacing the burner orifices.**

For high-elevation (>2,000 feet (>609 meters)) installations that require orifice replacement, replace the burner orifices as follows:

1. Determine model number and rated input (BTUh) from unit's rating plate.
2. Determine appropriate orifice replacement (refer to **Table 25**) for installation elevation.

Table 25. Burner Orifices

Installation Location	Installation Elevation (Feet (Meters))	Gas Type	Unit Size (MBTUh)						
			400	500	600	700	800	1050	1200
			PN, Drill Size (Quantity)*						
US, Canada	0–2001 (0–610)	NG	84437, #42 (16)	11833, #44 (12)	84437, #42 (12)	84437, #42 (14)	84437, #42 (16)	84437, #42 (14)	84437, #42 (16)
		LP	61652, 1.45 mm (16)	11830, #55 (12)	61652, 1.45 mm (12)	61652, 1.45 mm (14)	61652, 1.45 mm (16)	61652, 1.45 mm (14)	61652, 1.45 mm (16)
US	2001–3000 (611–915)	NG	84437, #42 (16)	38678, #45 (12)	84437, #42 (12)	84437, #42 (14)	84437, #42 (16)	84437, #42 (14)	84437, #42 (16)
		LP	11834, #54 (16)	11830, #55 (12)	11834, #54 (12)	11834, #54 (14)	11834, #54 (16)	11834, #54 (14)	11834, #54 (16)
Canada	2001–4500 (611–1373)	NG	11828, #43 (16)	38678, #45 (12)	11828, #43 (12)	11828, #43 (14)	11828, #43 (16)	11828, #43 (14)	11828, #43 (16)
		LP	11834, #54 (16)	11830, #55 (12)	11834, #54 (12)	11834, #54 (14)	11834, #54 (16)	11834, #54 (14)	11834, #54 (16)
US	3001–4000 (916–1220)	NG	11828, #43 (16)	38678, #45 (12)	11828, #43 (12)	11828, #43 (14)	11828, #43 (16)	11828, #43 (14)	11828, #43 (16)
		LP	11834, #54 (16)	11830, #55 (12)	11834, #54 (12)	11834, #54 (14)	11834, #54 (16)	11834, #54 (14)	11834, #54 (16)
	4001–5000 (1221–1525)	NG	11828, #43 (16)	38678, #45 (12)	11828, #43 (12)	11828, #43 (14)	11828, #43 (16)	11828, #43 (14)	11828, #43 (16)
		LP	11834, #54 (16)	11830, #55 (12)	11834, #54 (12)	11834, #54 (14)	11834, #54 (16)	11834, #54 (14)	11834, #54 (16)
	5001–6000 (1526–1830)	NG	11828, #43 (16)	16590, #46 (12)	11828, #43 (12)	11828, #43 (14)	11828, #43 (16)	11828, #43 (14)	11828, #43 (16)
		LP	97360, 1.35 mm (16)	39658, #56 (12)	97360, 1.35 mm (12)	97360, 1.35 mm (14)	97360, 1.35 mm (16)	97360, 1.35 mm (14)	97360, 1.35 mm (16)
	6001–7000 (1831–2135)	NG	11833, #44 (16)	84853, #47 (12)	11833, #44 (12)	11833, #44 (14)	11833, #44 (16)	11833, #44 (14)	11833, #44 (16)
		LP	97360, 1.35 mm (16)	39658, #56 (12)	97360, 1.35 mm (12)	97360, 1.35 mm (14)	97360, 1.35 mm (16)	97360, 1.35 mm (14)	97360, 1.35 mm (16)
	7001–8000 (2136–2440)	NG	11833, #44 (16)	84853, #47 (12)	11833, #44 (12)	11833, #44 (14)	11833, #44 (16)	11833, #44 (14)	11833, #44 (16)
		LP	11830, #55 (16)	39658, #56 (12)	11830, #55 (12)	11830, #55 (14)	11830, #55 (16)	11830, #55 (14)	11830, #55 (16)

*Quantity listed is per duct furnace.

Measure and Adjust Manifold (Outlet) Gas Pressure—Continued

High-Elevation Conversion—Continued

Table 25. Burner Orifices

Installation Location	Installation Elevation (Feet (Meters))	Gas Type	Unit Size (MBTUh)						
			400	500	600	700	800	1050	1200
			PN, Drill Size (Quantity)*						
US	8001–9000 (2441–2745)	NG	38678, #45 (16)	40414, #48 (12)	38678, #45 (12)	38678, #45 (14)	38678, #45 (16)	38678, #45 (14)	38678, #45 (16)
		LP	11830, #55 (16)	39658, #56 (12)	11830, #55 (12)	11830, #55 (14)	11830, #55 (16)	11830, #55 (14)	11830, #55 (16)
	9001–10,000 (2746–3048)	NG	16590, #46 (16)	40414, #48 (12)	16590, #46 (12)	16590, #46 (14)	16590, #46 (16)	16590, #46 (14)	16590, #46 (16)
		LP	11830, #55 (16)	39658, #56 (12)	11830, #55 (12)	11830, #55 (14)	11830, #55 (16)	11830, #55 (14)	11830, #55 (16)

*Quantity listed is per duct furnace.

3. Unthread existing burner orifices from gas manifold.

⚠ DANGER ⚠

- **DO NOT use pipe tape or sealant (pipe dope or joint compound) on orifice threads because the hole in the orifice may become blocked and may cause fire, explosion, property damage, carbon monoxide poisoning, personal injury, or death.**
- **DO NOT attempt to drill out orifices in the field. Use only factory-supplied orifices. Improperly drilled orifices may cause fire, explosion, carbon monoxide poisoning, personal injury, or death.**

4. Thread replacement burner orifices into gas manifold—to prevent cross-threading, hand-tighten orifices into gas manifold until snug and then tighten one-and-one-half to two turns using wrench.

⚠ DANGER ⚠

DO NOT use an open flame to check for gas leaks.

5. Check all connections for gas leaks using commercial leak-detecting fluid or rich soap and water solution. Leaks are indicated by presence of bubbles. If leak is detected, tighten connection. If leak cannot be stopped by tightening connection, replace part(s).

Gas Conversion

⚠ DANGER ⚠

Gas conversion must be performed by qualified service personnel using a factory-supplied conversion kit. Failure to use the proper conversion kit can cause fire, explosion, property damage, carbon monoxide poisoning, personal injury, or death.

If gas conversion (natural gas to propane or propane to natural gas) is required, convert the unit in accordance with the gas conversion manual found at **www.reznorhvac.com**. When conversion is complete, verify that the input rate is correct.

Burner Air Shutter Adjustment

⚠ DANGER ⚠

Failure to adjust air shutters according to directions could cause property damage, personal injury, and/or death.

NOTE: Air shutters are required on propane gas units but are optional on natural gas units.

1. Operate heater for about 15 minutes with air shutters open.

NOTE: When making the adjustment, close the air shutters no more than is necessary to eliminate the problem condition.

2. Turn slotted screw that moves air shutters and adjusts all burners simultaneously on end manifold bracket—clockwise to open shutters or counterclockwise to close shutters. Close air shutters and observe flame for yellow-tipping.

NOTE: A limited amount of yellow-tipping is permissible for liquefied petroleum gases. Natural gas should not display any yellow-tipping.

3. Open air shutters until yellow disappears.

MAINTENANCE

⚠ WARNING ⚠

If you turn OFF the power supply, turn OFF the gas.

⚠ CAUTION ⚠

When cleaning, wearing eye protection is recommended.

NOTE: Use only factory-authorized replacement parts.

This unit will operate with a minimum of maintenance. To ensure long life and satisfactory performance, a furnace that is operating under normal conditions should be inspected every 4 months. If the furnace is operating in an area where an unusual amount of dust, soot, or other impurities are present in the air, more frequent inspection is recommended.

Service Checklist

The following section is designed to aid a qualified service person in maintaining and servicing this equipment. At a minimum, perform the following annually:

- ❑ Inspect filters and clean or replace as necessary.
- ❑ Inspect blower and belt—check belt for tension, wear, and alignment (adjust or replace as needed) and clean dirt from blower and motor.
- ❑ Check gas valve to ensure that gas flow is being shut off completely.
- ❑ Clean heat exchanger both internally and externally.
- ❑ Check pilot burner and main burners for scale, dust, or lint accumulation and clean as necessary.
- ❑ Clean all dirt and grease from primary and secondary combustion air openings.
- ❑ Check flue products outlet and clean as necessary.
- ❑ Check vent cap in optional extended vent system and replace any parts that do not appear sound.

Service Checklist—Continued

- ❑ Check vent/combustion air system, inspect all joints, and replace any parts that do not appear sound.
- ❑ Check main burner ports, carryover assemblies, and orifices for cleanliness.
- ❑ Check wiring for any damaged wire—replace damaged wiring (refer to **Electrical Connections** section for wiring requirements).

Maintenance Procedures

Combination Gas Valve Maintenance

⚠ WARNING ⚠

The combination gas valve is the prime safety shutoff. To ensure positive closure, all gas supply lines must be free of dirt or scale before connecting them to the unit.

Inspect the combination gas valve, carefully remove any external dirt accumulation, and check wiring connections. Check the valve annually to ensure that the valve is shutting off gas flow completely as follows:

1. Close manual shutoff valve to prevent flow to combination gas valve.

NOTE: A manometer (fluid-filled gauge) with an inches water column scale is recommended.

2. Connect manometer to inlet pressure tap on combination gas valve(see **Figure 41**).
3. Observe manometer for 2 to 3 minutes—no gas pressure should be indicated.
   a. If manometer indicates any gas pressure, manual shutoff valve must be replaced or repaired before combination gas valve can be checked.
   b. If manometer does not indicate gas pressure, slowly open manual shutoff valve.
4. Close manual shutoff valve and observe manometer— no loss of gas pressure should be indicated. If loss of pressure is indicated, replace combination gas valve before furnace is restored to operation.

Burner Rack Maintenance

Remove, disassemble, clean, reassemble, and re-install burner rack as follows:

1. Remove burner rack:
   a. Turn OFF gas and electric supply.
   b. Remove control access side panel.
   c. Disconnect any pilot lines and flame sensor leads.
   d. Mark and disconnect electric valve leads.
   e. Uncouple union in gas supply.
   f. Remove sheet metal screws in top corners of burner rack assembly.
   g. Pull drawer-type burner rack out of furnace.

2. Disassemble burner rack:

NOTE: Natural gas burner racks manufactured *before* 1997 may have a lighter tube carryover system. Break the lighter tube connection at the orifice and remove the supply tubing, the drip shield, and the lighter tube.

a. For natural gas burner rack, remove flash carryover system from manifold end of burner rack.
b. For propane gas burner rack:
   (1) Break lighter tube connection at regulator and remove lighter tube orifice supply tubing.
   (2) Remove retaining screws in drip shield and remove shield.
   (3) Remove retaining screws and slide out lighter tube.
c. Pull main burners horizontally away from injection opening and lift out.
d. Remove manifold bracket screws and remove manifold.
e. Remove burner orifices.
f. Remove screws and lift out pilot burner.

3. Clean burner rack in accordance with instructions in **Cleaning Pilot and Burners** section.
4. Replace burner orifices (refer to **Table 25**) as necessary.
5. Re-assemble and re-install burner rack by reversing above steps, being careful not to create any unsafe conditions.

Cleaning Pilot and Burners

⚠ WARNING ⚠

To prevent injury when cleaning pilot and burners, wearing eye protection is recommended.

⚠ CAUTION ⚠

To prevent damage to pilot orifice, do not ream the orifice.

If the pilot flame appears short and/or yellow, check the pilot orifice for blockage caused by lint or dust accumulation.

1. Remove the pilot orifice and clean it using compressed air.
2. Check and clean the aeration slot in the pilot burner.
3. Clean the metal sensing probe and the pilot hood with an emery cloth and wipe off the ceramic insulator.
4. Check the spark gap (see **Figure 42**), which should be maintained to 0.100 inch.

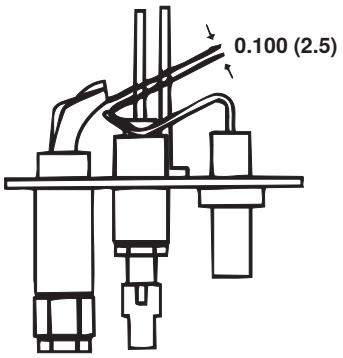

Figure 42. Pilot Assembly Spark Gap

Maintenance Procedures—Continued

Cleaning Pilot and Burners—Continued

5. After the pilot is cleaned, blow away any dirt using compressed air.
6. Clean the main burners and burner orifices using compressed air.

⚠ CAUTION ⚠

When cleaning burner ports, do not use anything that might change the port size.

7. Use an air nozzle to blow out scale and dust accumulation from the burner ports. Alternate blowing compressed air through the burner ports and then through the venturi. Use a fine wire to dislodge any stubborn particles from the burner ports.
8. Clean the burner rack carryover systems using compressed air.

Spark Ignition System Maintenance

⚠ WARNING ⚠

Due to high voltage on pilot spark wire and pilot electrode, do not touch when energized.

NOTE: When checking for spark with the pilot burner assembly removed from the burner rack, the pilot assembly must be grounded to the heater for proper spark.

1. If no spark occurs, check the following:
   a. Using microampmeter, measure voltage between terminals TH and 7 on ignition controller. Voltage should be at least 20V and no higher than 32V. Refer to **TROUBLESHOOTING** section if no voltage is observed.
   b. Check for short to ground in high tension lead and/or ceramic insulator.
   c. Check the spark gap (see **Figure 43**), which should be maintained to 0.100 inch.
   d. If the above conditions are normal and no spark occurs, replace the ignition controller.

NOTE: If replacing an earlier model of ignition controller (see Figure 43), order a replacement kit (PN 257472 for a unit with recycling gas control option AH2 or PN 257473 for a unit with gas control with lockout option AH3). Option codes are listed on the unit wiring diagram.

OPTION AH2

PN 257009

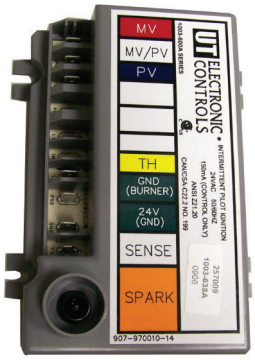

OPTION AH3

PN 257010

Figure 43. Obsolete Ignition Controllers

2. If the main gas valve fails to open with a normal full-size pilot flame established, check the following:
   a. If voltage between black and brown leads on main gas valve is 20–32 VAC and there is no main gas flow with built-in manual valve in FULL OPEN position, main valve is defective.
   b. If there is no voltage between black and brown leads on main gas valve, check for disconnected or shorted flame sensor lead or flame sensor probe.
3. If the above conditions are normal and main gas flow is still off, the ignition controller is probably defective. Do not attempt to service the ignition controller as it does not contain any replaceable components.

Blower Bearing Lubrication

⚠ CAUTION ⚠

If the blower is unused for more than 3 months, lubricate with new grease any bearing with a grease fitting prior to startup.

NOTE: If unusual environmental conditions exist—temperatures <32°F (<0°C) or >200°F (>93°C), moisture, or contaminants—or if unit is in continuous operation, more frequent service is required.

The blower bearings on systems with a <10-HP motor (standard blower) are permanently-lubricated cartridge ball bearings that do not require greasing. The blower bearings on systems equipped with a 10- to 20-HP motor are pillow block ball bearings that are equipped with a grease fitting. These bearings should be lubricated twice a year with a high-temperature, moisture-resistant grease (type NLGI-1 or -2 standard grease is recommended). Be sure to clean the grease fitting before adding grease. Add grease with a handgun until a slight bead of grease forms at the seal. Be careful not to unseat the seal by over-lubricating.

Venter Motor Maintenance

Power venter motors are permanently lubricated. No oiling is required.

Cooling Coil Maintenance

The cooling coil cabinet is designed with easily-removable panels on both sides of the cabinet to provide access for inspection and cleaning. Inspect the coil during routine maintenance and whenever the filters are changed. Check the cooling coil for build up of debris and clean as required.

Heat Exchanger Cleaning

NOTE: For cleaning the inner surfaces of the heat exchanger, an air hose, a long (18- to 24-inch) stiff brush of 1/2-inch diameter or heavy wire with steel wool securely attached, a flashlight, and a mirror are needed.

1. Clean heat exchanger inner surfaces (combustion gas side):
   a. Remove burner rack assembly in accordance with **Burner Rack Maintenance** section.
   b. Clean inner surfaces using furnace brush or piece of heavy wire to which piece of steel wool is attached. Scrub tube walls to remove any accumulated dust, rust, and/or soot.
   c. Install burner rack assembly in accordance with **Burner Rack Maintenance** section.

Maintenance Procedures—Continued

Heat Exchanger Cleaning—Continued

2. For unit size 400 only, clean heat exchanger outer surfaces (circulating air side):
   a. Gain access by removing inspection panels in ductwork or remove ductwork.
   b. For standard (not high CFM) furnaces, remove baffle screws (see **Figure 44**) and lift each airflow baffle slightly and slide forward. Remove all baffles from heat exchanger.
   c. Remove accumulated dust and grease deposits from heat exchanger tubes and baffles using brush and/or air hose.
   d. Reinstall airflow baffles removed in step 2b and secure using baffle screws.
   e. Secure ductwork as necessary.
3. Check furnace for proper operation.

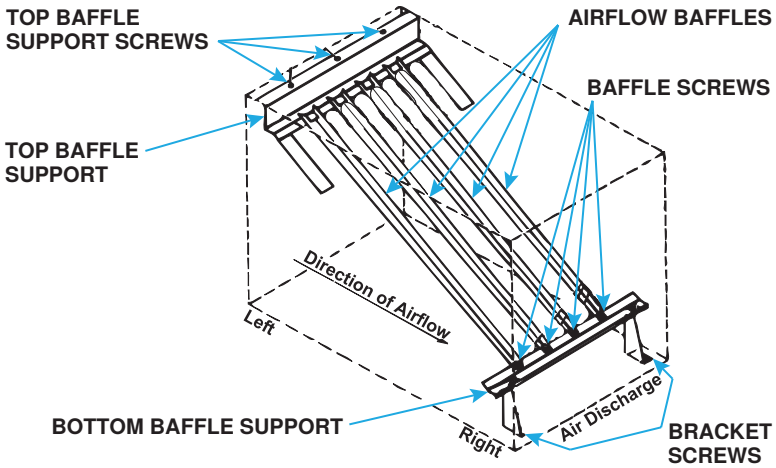

Figure 44. Airflow Baffles

TROUBLESHOOTING

General Troubleshooting

Table 26. General Troubleshooting

Symptom	Probable Cause	Remedy
A. Venter motor will not start	1. No power to furnace	Turn ON power and check supply fuses or circuit breaker
	2. No 24V power to venter relay	Turn up thermostat and check control transformer output
		Check for loose or improper wire connections
	3. Defective venter relay	Replace defective part
	4. Defective motor or capacitor	Replace defective part

Table 26. General Troubleshooting—Continued		
Symptom	**Probable Cause**	**Remedy**
B. Pilot will not light with venter operating	1. Manual valve not open	Open manual valve
	2. Air in gas line	Bleed gas line
	3. Dirt in pilot orifice	Remove pilot orifice and clean with compressed air or solvent
	4. Gas pressure too high or too low	Adjust gas pressure (refer to **Measure and Adjust Manifold (Outlet) Gas Pressure** section)
	5. Kinked pilot tubing	Replace tubing
	6. Pilot valve does not open	If 24V power is available at valve, replace valve
	7. No spark	
	a. Loose wire connections	Ensure that all wires connections are solid
	b. Transformer failure	Ensure that 24V power is available
	c. Incorrect spark gap	Maintain spark gap at 0.100 inch
	d. Spark cable shorted to ground	Replace worn or grounded spark cable
	e. Spark electrode shorted to ground	Replace pilot if ceramic spark electrode is cracked or grounded
	f. Drafts affecting pilot	Ensure that all panels are in place and are tightly secured to prevent drafts at pilot
	g. Ignition control not grounded	Ensure that ignition control is grounded to furnace chassis
	h. Faulty ignition controller	If 24V power is available to ignition controller and all other causes have been eliminated, replace ignition control
	8. Optional lockout device interrupting control circuit due to above causes	Reset lockout by interrupting control at thermostat
	9. Faulty combustion air proving switch	Replace combustion air proving switch
C. Pilot lights but main valve will not open	1. Manual valve not open	Open manual valve
	2. Main valve not operating	
	a. Defective valve	If 24V power is available at valve connections and valve remains closed, replace valve
	b. Loose wire connections	Check and tighten all wiring connections
C. Pilot lights but main valve will not open	3. Ignition control does not power main valve	
	a. Loose wire connections	Check and tighten all wiring connections
	b. Flame sensor grounded, pilot lights, and spark continues	Ensure that flame sensor lead is not grounded and that insulation or ceramic is not cracked; replace as required
	c. Incorrect gas pressure	Adjust gas pressure (refer to **Measure and Adjust Manifold (Outlet) Gas Pressure** section)
	d. Cracked ceramic at sensor	Replace sensor
	e. Faulty ignition controller	If all checks listed in **Spark Ignition System Maintenance** section indicate no other cause, replace ignition controller (do not attempt to repair ignition controller, which has no field-replaceable parts)
	f. Poor microamp signal	Adjust pilot regulator
D. Insufficient heat with heater operating	1. Dirty filters in blower system	Clean or replace filters
	2. Incorrect manifold pressure	Check manifold pressure (refer to **Measure and Adjust Manifold (Outlet) Gas Pressure** section)
	3. Limit control cycling on	Check air throughput
	4. Improper thermostat location or adjustment	Refer to thermostat manufacturer's instructions
	5. Belt slipping on blower	Adjust belt tension (refer to **Checking and Adjusting Belt Tension** section)
	6. Fan control improperly wired	Ensure that wiring connections are in accordance with wiring diagram
	7. Defective fan control	Replace fan control
	8. Blower set for too low temperature rise	Decrease blower speed (refer to **Adjusting Blower Speed** section) or increase static pressure
E. Cold air at startup or during operation	1. Fan control improperly wired	Ensure that wiring connections are in accordance with wiring diagram
	2. Defective fan control	Replace fan control
	3. Incorrect manifold pressure	Check manifold pressure (refer to **Measure and Adjust Manifold (Outlet) Gas Pressure** section)
	4. Blower set for too low temperature rise	Decrease blower speed (refer to **Adjusting Blower Speed** section) or increase static pressure
F. Motor will not run	1. Circuit open	Check wiring and connections
	2. Inoperative fan control	Replace fan control
	3. Fan control improperly wired	Ensure that wiring connections are in accordance with wiring diagram
	4. Inoperative contactor	Replace contactor
	5. Defective motor	Replace motor

General Troubleshooting—Continued

Table 26. General Troubleshooting—Continued		
Symptom	**Probable Cause**	**Remedy**
G. Motor turns ON and OFF while burner is operating	1. Fan control heater element improperly wired	Ensure that wiring connections are in accordance with wiring diagram
	2. Defective fan control	Replace fan control
	3. Motor overload device cycling	Verify motor load against motor rating plate
		Replace motor or overload device
	4. Three-phase motor rotating in opposite direction	Interchange two legs of supply connections
H. Motor cuts out on overload	1. Improper motor pulley adjustment	Ensure that motor pulley is properly-adjusted (refer to **Adjusting Blower Speed** section)
	2. Improper static pressure on duct system	Adjust dampers in duct system
	3. Low voltage	Check power supply

Troubleshooting Bypass Combustion Air Damper Safety Circuit on Units with Option AG39, AG40, AG41, or AG42

NOTE: For each of the following steps, check to ensure that the wiring is not defective and that wiring connections are secure.

1. Main burners are inoperative—24V is available between terminals 2 and 7 (see step 1, **Figure 45**).
2. Steady call for heat (burner cycles)—24V is available between terminals 11 and 7 and terminals 2 and 7 (see step 1, **Figure 45**).

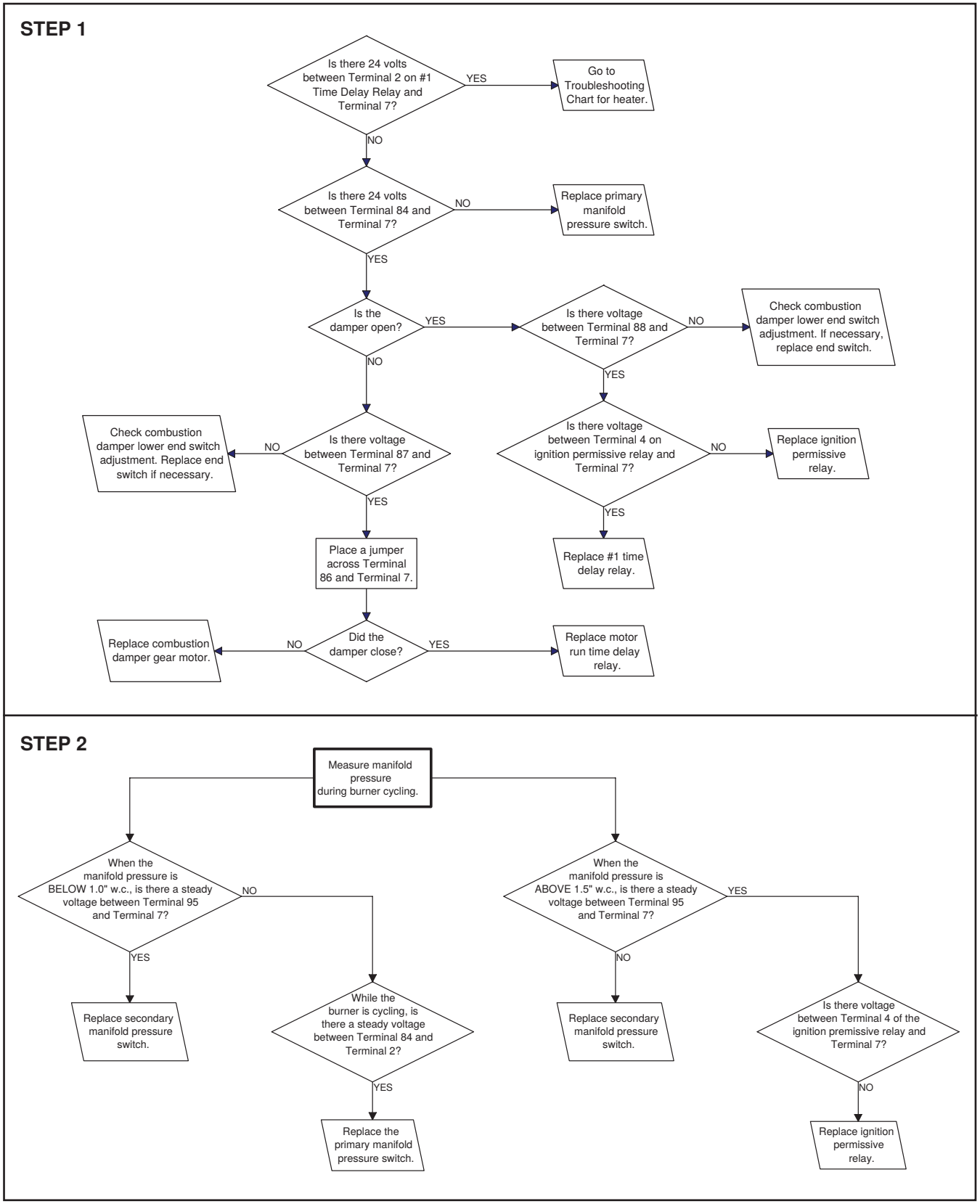

Figure 45. Troubleshooting Guide for Checking Bypass Combustion Air Damper Safety Circuit on Units with Option AG39, AG40, AG41, or AG42

INSTALLATION RECORD (TO BE COMPLETED BY INSTALLER)

Model	Serial No.	Date of Installation	Notes
	Installer	Distributor	
Name			
Company			
Address			
Phone No.			

For more information on Reznor HVAC products:

- **Contact your local Reznor representative at 1-800-695-1901**
- **Refer to the technical specifications, manuals, and consumer materials found at www.reznorhvac.com**

Specifications and illustrations subject to change without notice or incurring obligations.
Latest version of this manual is available at **www.reznorhvac.com**.
©2026 Reznor LLC, Saint Charles, MO. All rights reserved.
SSCBL-IOM (10-26) 149159-M