REZNOR®

Revision: CAUA-RPL (10-26) REV-E

Supersedes: CAUA-RPL (01-26) REV-D

REPLACEMENT PARTS FOR GAS-FIRED INDOOR UPFLOW AIR HANDLER

MODEL CAUA

TABLE OF CONTENTS

SERIAL NUMBER 2
ELECTRICAL COMPONENTS 3
BLOWER MOTOR COMPONENTS. 6
DRIVE COMPONENTS (PULLEYS AND BELTS) 9
BLOWER COMPONENTS 12
CABINET COMPONENTS 15
VENTER COMPONENTS 16
VENT/COMBUSTION AIR COMPONENTS 17
BURNER BOX AND HEAT EXCHANGER COMPONENTS. 18
ACCESSORIES/OPTIONS 21

NOTE: Unit sizes 250 and 300 were discontinued AUG 2023 with the introduction of unit size 275.

IMPORTANT

- **Always include complete model and serial number so that any specification change can be considered for parts replacement. It can save time and expense.**
- **In keeping with our policy of continuous product improvement, we reserve the right to alter any information shown here.**
- **Order by Part Number (PN) not by option designation.**

WE RESERVE THE RIGHT TO SUBSTITUTE FUNCTIONAL REPLACEMENTS.

SERIAL NUMBER

Decode serial number as follows:

Serial No. Sample: **BOG 3062 00000**
Elements Key No.: **1 | 2 | 3**

Key:

1 = Date code (refer to **Table 1**)
2 = Plant of manufacture (3060 = Mercer; 3062 = Monterrey)
3 = Consecutive number

Table 1. Serial Number Date Codes (Month and Year)

Year	Month											
	JAN	FEB	MAR	APR	MAY	JUN	JUL	AUG	SEP	OCT	NOV	DEC
2015	BOA	BOB	BOC	BOD	BOE	BOF	BOG	BOH	BOI	BOJ	BOK	BOL
2016	BPA	BPB	BPC	BPD	BPE	BPF	BPG	BPH	BPI	BPJ	BPK	BPL
2017	BQA	BQB	BQC	BQD	BQE	BQF	BQG	BQH	BQI	BQJ	BQK	BQL
2018	BRA	BRB	BRC	BRD	BRE	BRF	BRG	BRH	BRI	BRJ	BRK	BRL
2019	BSA	BSB	BSC	BSD	BSE	BSF	BSG	BSH	BSI	BSJ	BSK	BSL
2020	BTA	BTB	BTC	BTD	BTE	BTF	BTG	BTH	BTI	BTJ	BTK	BTL
2021	BUA	BUB	BUC	BUD	BUE	BUF	BUG	BUH	BUI	BUJ	BUK	BUL
2022	BVA	BVB	BVC	BVD	BVE	BVF	BVG	BVH	BVI	BVJ	BVK	BVL
2023	BWA	BWB	BWC	BWD	BWE	BWF	BWG	BWH	BWI	BWJ	BWK	BWL
2024	BXA	BXB	BXC	BXD	BXE	BXF	BXG	BXH	BXI	BXJ	BXK	BXL
2025	BYA	BYB	BYC	BYD	BYE	BYF	BYG	BYH	BYI	BYJ	BYK	BYL
2026	BZA	BZB	BZC	BZD	BZE	BZF	BZG	BZH	BZI	BZJ	BZK	BZL
2027	CAA	CAB	CAC	CAD	CAE	CAF	CAG	CAH	CAI	CAJ	CAK	CAL
2028	CBA	CBB	CBC	CBD	CBE	CBF	CBG	CBH	CBI	CBJ	CBK	CBL
2029	CCA	CCB	CCC	CCD	CCE	CCF	CCG	CCH	CCI	CCJ	CCK	CCL
2030	CDA	CDB	CDC	CDD	CDE	CDF	CDG	CDH	CDI	CDJ	CDK	CDL
2031	CEA	CEB	CEC	CED	CEE	CEF	CEG	CEH	CEI	CEJ	CEK	CEL
2032	CFA	CFB	CFC	CFD	CFE	CFF	CFG	CFH	CFI	CFJ	CFK	CFL
2033	CGA	CGB	CGC	CGD	CGE	CGF	CGG	CGH	CGI	CGJ	CGK	CGL
2034	CHA	CHB	CHC	CHD	CHE	CHF	CHG	CHH	CHI	CHJ	CHK	CHL
2035	CIA	CIB	CIC	CID	CIE	CIF	CIG	CIH	CII	CIJ	CIK	CIL

ELECTRICAL COMPONENTS

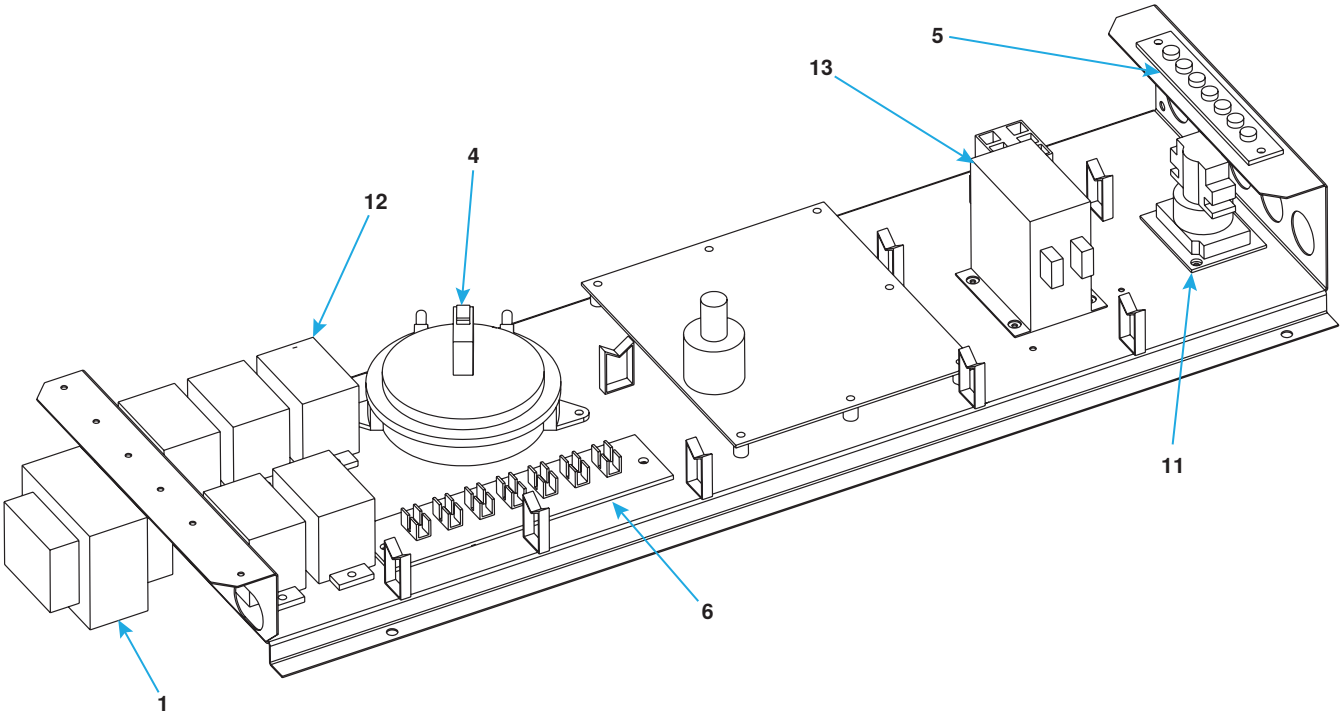

Figure 1. Typical Electrical Control Panel (Refer to Table 2)

Table 2. Electrical Components

Item No.	Component	Description	Unit Size (MBTUh) 150, 200	250	275	300	350, 400	Location
			PN (Quantity)*					
1	Transformer	40VA, 208/240V to 24V	103497					Control panel
1A	Bracket	Transformer	164518					
2	Transformer	25kVA, 480/240V, enclosed	166740					
		25kVA , 575/240V, enclosed	113556					
3	Ignition board	230V, for units manufactured ***after*** FEB 2009	195573					
3A	Replacement kit	For replacing RAM #3MC4-06 or J/C #G822KCC-5401D on units manufactured ***before*** MAR 2009	258251					
4	Pressure switch	0.75 IN WC	203933**		—		203933**	
		0.70 IN WC	205446***		205446**		205446***	
		0.65 IN WC	—		207169***		—	
5	Terminal strip	7-pole, thermostat	164545					
6		7-pole, unit	164544					
7	Wire saddle	Locking	123606					
8	Terminal block	Supply wiring	144972					
8A	Mounting adapter	Terminal block end	144973					

*Quantity is one (1) unless otherwise indicated.

**For 0–4000 feet elevation.

***For >4000 feet elevation.

ELECTRICAL COMPONENTS—CONTINUED

Table 2. Electrical Components—Continued

Item No.	Component	Description	Unit Size (MBTUh) 150, 200	250	275	300	350, 400	Location
			PN (Quantity)*					
9	Tubing	Silicone rubber, 6-inch-long, switch to venter	148986					Control panel
10		Silicone rubber, 13-inch-long, switch to burner	174399	—				
		Silicone rubber, 18-inch-long, switch to burner	—	174400				
11	Relay	Time delay, type 12s20	136758					
12	Relay	DPDT, plug-in	211411					
12A	Socket	Relay	211415					
12B	Replacement kit	Relay, PN 14747	263527					
		Relay, PN 103317						
13	Contactor	1PH, 20A, 2-pole	164791					
		3PH	119627					
—	Transformer	208/240V to 24V, 40VA	103497					Mixing box
	Electrical box	Blower with direct-drive motor	164702					Blower compart-ment
	Cover	Blower electrical box	164703					
	Blower motor	Direct-drive, 1-HP, 3-speed	164329	164329 (2)				
	Clamp	Capacitor	204002					
	Felt	Capacitor clamp	171529					
	Boot	Capacitor	103182					
	Switch	Door interlock	116023					
	Sensor	Flame	147165					Burner box
	Limit control, manual reset	270°F, 60-inch capillary	148588	—			148588	Right side
		300°F, 54-inch capillary	—	164792	—	164792	—	
		240°F, 60-inch capillary	—		210855	—		
	Electrode	Spark	147166					Burner box
	Boot	Spark electrode	156032					
	Cable	Ignition, 18-inch	257665					
	Switch	Flame rollout , 225°F	112752	—			112752	Burner
		Flame rollout , 275°F	—	121275			—	
	Ductstat	Includes capillary tubing, option AG3, units manufactured ***before*** MAR 2022, no longer available—replaced by PN 211481	41700					Unit and supply duct
		Two-stage, 50–120°F, 10-foot capillary, option AG3, units manufactured ***after*** FEB 2022, replaces PN 41700—note that terminal designations are different	211481					
	Pressure switch	Dirty filter, field-adjustable, 0.17–5.00 (±0.05) IN WC range	105507					—
	Combination gas valve	Refer to **Table 3**						

*Quantity is one (1) unless otherwise indicated.

Table 3. Combination Gas Valves

Gas Control Option	Gas Type	Unit Size (MBTUh) 150	200	250, 275, 300	350, 400
		PN			
AG1	NG	260604	—	150839	—
AG2, AG3	NG	177396		177397	
	LP	177398			

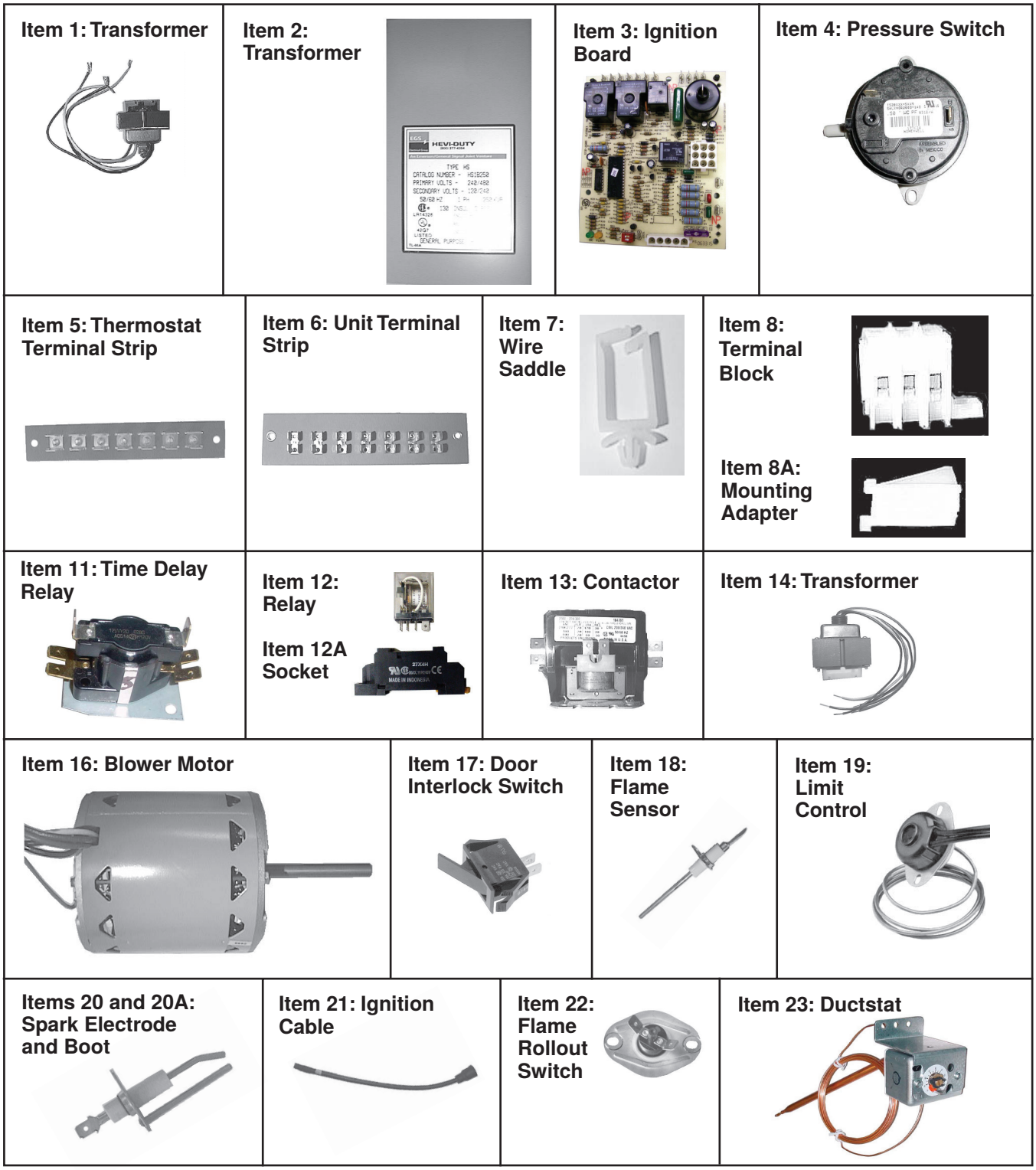

Figure 2. Individual Electrical Components (Refer to Table 2)

BLOWER MOTOR COMPONENTS

NOTE: Blower motors can be either direct-drive (PN 164329, with voltage option AK2 or AK3) or belt-drive. Replacement belt-drive motors are listed in Table 4 and Table 5. Motors that don't list a contactor require a starter. If a contactor is listed, the starter is optional.

Item 3: Starter

and

Item 4: Starter Overload

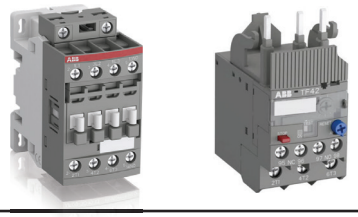

Item 5: Contactor

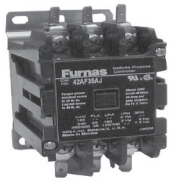

Figure 3. Replacement Motor Starter and Overload and Contactor

Table 4. Open-Type Belt-Drive Blower Motor Assembly

HP	Phase	Voltage	Voltage Option	Item 1A: Motor		Item 3: Starter	Item 4: Starter Overload		Item 5: Contactor
				FLA	PN	PN	Amp Range	PN	PN
1/3	1	208, 240	AK2, AK3	3.20	202091	1036971	3.10–4.20	1036932	119627
	3	208	AK5	1.70	151863	1036971	1.70–2.30	1036930	—
		240	AK6	1.40			1.30–1.70	1036929	
		480	AK7	0.70			0.55–0.74	1036926	
1/2	1	208, 240	AK2, AK3	4.10	102627	1036971	3.10–4.20	1036932	119627
	3	208	AK5	1.80	159183	1036971	1.70–2.30	1036930	119627
		240	AK6	1.70					
		480	AK7	0.90	159183	1036971	0.74–1.00	1036927	119626
		575	AK8	0.70	202089		0.55–0.74	1036926	—
3/4	1	208, 240	AK2, AK3	5.20	93548	1036971	4.20–5.70	1036933	119627
	3	208	AK5	2.90	36951	1036971	2.30–3.10	1036931	119627
		240	AK6	2.60					
		480	AK7	1.30	36951	1036971	1.30–1.70	1036929	119626
		575	AK8	1.00	202090		1.00–1.30	1036928	—
1	1	208	AK2	6.20	13685	1036971	5.70–7.60	1036934	119627
		240	AK3	6.30					
	3	208	AK5	3.20	36580	1036971	3.10–4.20	1036932	119627
		240	AK6	3.00			2.30–3.10	1036931	
		480	AK7	1.50	36580	1036971	1.30–1.70	1036929	119626
		575	AK8	1.40	158175				—
1-1/2	1	208	AK2	7.80	194202	1036971	7.60–10.00	1036935	119627
		240	AK3	7.50					
	3	208	AK5	4.40	115859	1036971	4.20–5.70	1036931	119627
		240	AK6	4.30				1036933	
		480	AK7	2.20	115859	1036971	1.70–2.30	1036930	119626
		575	AK8	2.00	158162				—
2	1	208, 240	AK2, AK3	12.30	202581	1036973	10.00–13.00	1036936	119627
	3	208, 240	AK5, AK6	6.00	159327	1036971	5.70–7.60	1036934	119627
		480	AK7	3.00	159327	1036971	2.30–3.10	1036931	119626
		575	AK8	2.40	158176				—
3	1	208	AK2	13.70	111560	1036973	13.00–16.00	1036937	—
		240	AK3	12.40			10.00–13.00	1036936	
	3	208	AK5	9.00	159185	1036971	7.60–10.00	1036935	119627
		240	AK6	8.60					
		480	AK7	4.30	159185	1036971	4.20–5.70	1036933	119626
		575	AK8	3.60	120019		3.10–4.20	1036932	—
5	3	208	AK5	13.40	113371	1036973	13.00–16.00	1036937	—
		240	AK6	13.20					
		480	AK7	6.60	113371	1036971	5.70–7.60	1036934	—
		575	AK8	5.40	120020		4.20–5.70	1036933	

Table 5. TEFC-Type Belt-Drive Blower Motor Assembly Components									
HP	Phase	Voltage	Voltage Option	Item 1A: Motor		Item 3: Starter	Item 4: Starter Overload		Item 5: Contactor
				FLA	PN	PN	Amp Range	PN	PN
1/3	1	208	AK2	2.30	159501	1036971	2.30–3.10	1036931	119627
		240	AK3	2.40					
	3	208, 240	AK5, AK6	1.20	105567	1036971	1.00–1.30	1036928	—
		480	AK7	0.60	105567	1036971	0.55–0.74	1036926	
1/2	1	208	AK2	3.50	159184	1036971	3.10–4.20	1036932	119627
		240	AK3	3.60					
	3	208	AK5	2.10	16077	1036971	1.70–2.30	1036930	119627
		240	AK6	1.80					
		480	AK7	0.90	16077	1036971	0.74–1.00	1036927	119626
		575	AK8	0.70	105568		0.55–0.74	1036926	—
3/4	1	208	AK2	5.40	115860	1036971	4.20–5.70	1036933	119627
		240	AK3	5.50					
	3	208	AK5	2.40	20371	1036971	2.30–3.10	1036931	119627
		240	AK6	2.30					
		480	AK7	1.20	20371	1036971	1.00–1.30	1036928	119626
		575	AK8	0.80	105569		0.74–1.00	1036927	—
1	1	208	AK2	6.20	174993	1036971	5.70–7.60	1036934	119627
		240	AK3	6.00					
	3	208	AK5	3.25	271444	1036971	3.10–4.20	1036932	119627
		240	AK6	2.94			2.30–3.10	1036931	
		480	AK7	1.47	271444	1036971	1.30–1.70	1036929	119626
		575	AK8	1.30	105570				—
1-1/2	1	208	AK2	7.80	94347	1036971	7.60–10.00	1036935	119627
		240	AK3	7.50			5.70–7.60	1036934	
	3	208	AK5	4.47	271445	1036971	4.20–5.70	1036933	119627
		240	AK6	4.05			3.10–4.20	1036932	
		480	AK7	2.02	271445	1036971	1.70–2.30	1036930	119626
		575	AK8	1.70	105665				—

BLOWER MOTOR COMPONENTS—CONTINUED

Table 6. Variable Frequency Drives

Motor			Variable Frequency Drive				Matching Line Reactor
Type	HP	Option	Frame Size	Voltage Option	Voltage/Phase/Hz	PN	PN
Open	1/2	AL4	R0	AK2, AK3	208/1/60, 230/1/60	221564	221595
				AK5, AK6	208/3/60, 230/3/60	221569	221598
				AK7	460/3/60	221575	221590
	3/4	AL5	R0	AK5, AK6	208/3/60, 230/3/60	221570	221598
				AK7	460/3/60	221576	221591
	1	AL6	R1	AK2, AK3	208/1/60, 230/1/60	221565	221596
				AK5, AK6	208/3/60, 230/3/60	221571	221594
			R0	AK7	460/3/60	221577	221592
	1-1/2	AL7	R1	AK2, AK3	208/1/60, 230/1/60	221566	221597
				AK5, AK6	208/3/60, 230/3/60	221572	221595
				AK7	460/3/60	221578	221593
	2	AL8	R2	AK2, AK3	208/1/60, 230/1/60	221567	221597
			R1	AK5, AK6	208/3/60, 230/3/60	221573	221596
				AK7	460/3/60	221579	221585
			R2	AK8	575/3/60	221855	Not required
	3	AL9	R2	AK2, AK3	208/1/60, 230/1/60	221568	221599
				AK5, AK6	208/3/60, 230/3/60	221574	221597
			R1	AK7	460/3/60	221580	221586
			R2	AK8	575/3/60	221856	Not required
	5	AL10	R2	AK5, AK6	208/3/60, 230/3/60	221611	221599
			R1	AK7	460/3/60	221581	221587
			R2	AK8	575/3/60	221857	Not required
TEFC	1/2	AL21	—	AK2, AK3	208/1/60, 230/1/60	221564	Not required
				AK5	208/3/60	221569	
				AK6	230/3/60	221569	
				AK7	460/3/60	221575	
	3/4	AL22	—	AK5, AK6	208/3/60, 230/3/60	221570	
				AK7	460/3/60	221576	
	1	AL23	—	AK2, AK3	208/1/60, 230/1/60	221565	
				AK5, AK6	208/3/60, 230/3/60	221571	
				AK7	460/3/60	221577	
	1-1/2	AL24	—	AK2, AK3	208/1/60, 230/1/60	221566	
				AK5, AK6	208/3/60, 230/3/60	221572	
				AK7	460/3/60	221578	
	2	AL25	—	AK2, AK3	208/1/60, 230/1/60	221567	
				AK5, AK6	208/3/60, 230/3/60	221573	
				AK7	460/3/60	221579	
				AK8	575/3/60	221855	
	3	AL26	—	AK2, AK3	208/1/60, 230/1/60	221568	
				AK5, AK6	208/3/60, 230/3/60	221574	
				AK7	460/3/60	221580	
				AK8	575/3/60	221856	
	5	AL27	—	AK5, AK6	208/3/60, 230/3/60	221611	
				AK7	460/3/60	221581	
				AK8	575/3/60	221857	
EE*	1	AL36	—	AK5, AK6	208/3/60, 230/3/60	221571	
				AK7	460/3/60	221577	
	1.5	AL37	—	AK5, AK6	208/3/60, 230/3/60	221572	
				AK7	460/3/60	221578	
	2	AL38	—	AK5, AK6	208/3/60, 230/3/60	221573	
				AK7	460/3/60	221579	
				AK8	575/3/60	221855	
	3	AL39	—	AK5, AK6	208/3/60, 230/3/60	221574	
				AK7	460/3/60	221580	
				AK8	575/3/60	221856	
	5	AL40	—	AK5, AK6	208/3/60, 230/3/60	221611	
				AK7	460/3/60	221581	
				AK8	575/3/60	221857	

*EE motors are no longer available.

DRIVE COMPONENTS (PULLEYS AND BELTS)

⚠ CAUTION ⚠

Check belt tension—proper belt tension is important to the long life of the belt and motor—a loose belt causes wear and slippage and too much tension causes excessive motor and blower bearing wear. If belt tension adjustment is required, tighten the locknut on the motor base adjusting screw until the belt can be depressed 1/2- to 3/4-inch. Ensure that the belt is aligned in the pulleys.

NOTE: Drive components are listed by motor (AL) option. The drive components include the belt, motor pulley, blower pulley, and bushings, if required. The blower pulley bore size = 1 inch.

Table 7. Drive Option (AM) RPM Range

Option	Range (RPM)	Option	Range (RPM)	Option	Range (RPM)
AM1	401–450	AM11	901–950	AM21	1401–1450
AM2	451–500	AM12	951–1000	AM22	1451–1500
AM3	501–550	AM13	1001–1050	AM23	1501–1550
AM4	551–600	AM14	1051–1100	AM24	1551–1600
AM5	601–650	AM15	1101–1150	AM25	1601–1650
AM6	651–700	AM16	1151–1200	AM26	1651–1700
AM7	701–750	AM17	1201–1250	AM27	1701–1750
AM8	751–800	AM18	1251–1300	AM28	1751–1800
AM9	801–850	AM19	1301–1350	AM29	1801–1850
AM10	851–900	AM20	1351–1400	AM30	1851–1900

Table 8. Drives, Pulleys, and Belts for Open-Type Motors

Unit Size (MBTUh)	Motor			Drive Option (AM)	Motor Pulley			Blower Pulley		Belt	
	HP	Motor Option (AL)	Voltage Option (AK)		PN	Model	Bore Size (Inches)	PN	Model	PN	Model
150	1/3	3	2, 3, 5, 6, 7	1, 2, 3, 4	4074	1VL34	1/2	19111	AK84	50472	A45
				5, 6	4074	1VL34	1/2	18797	AK64	101412	A42
	1/2	4	2, 3, 5, 6, 7	5, 6, 7, 8	13580	1VL34	5/8	18797	AK64	101412	A42
	3/4	5	2, 3, 5, 6, 7	7, 8, 9, 10, 11	13580	1VL34	5/8	135202	AK54	16019	A40
	1	6	2, 3, 5, 6, 7	10, 11, 12, 13	13580	1VL34	5/8	105481	AK46	105493	A39
			8	10, 11, 12, 13	110125	1VP34	7/8	105481	AK46	105493	A39
	1-1/2	7	2, 3, 5, 6, 7	11, 12, 13, 14, 15, 16	7962	1VL40	5/8	135202	AK54	101412	A42
			8	11, 12, 13, 14, 15, 16	106748	1VL40	7/8	135202	AK54	101412	A42
	2	8	2, 3, 5, 6, 7, 8	17	106748	1VL40	7/8	135200	AK51	50500	A41
200	1/3	3	2, 3, 5, 6, 7	3	4074	1VL34	1/2	19111	AK84	50472	A45
	1/2	4	2, 3, 5, 6, 7	5, 6, 7	13580	1VL34	5/8	105483	AK69	50470	A43
	3/4	5	2, 3, 5, 6, 7	6, 7, 8, 9, 10	13580	1VL34	5/8	105482	AK56	50500	A41
	1	6	2, 3, 5, 6, 7	7, 8, 9, 10, 11	13580	1VL34	5/8	105482	AK56	50500	A41
			8	7, 8, 9, 10, 11	110125	1VP34	7/8	105482	AK56	50500	A41
	1-1/2	7	2, 3, 5, 6, 7	9, 10, 11, 12, 13, 14	7962	1VL40	5/8	115716	AK59	50470	A43
			8	9, 10, 11, 12, 13, 14	106748	1VL40	7/8	115716	AK59	50470	A43
	2	8	2, 3, 5, 6, 7, 8	13, 14, 15, 16	106748	1VL40	7/8	135202	AK54	101412	A42
250	1/3	3	2, 3, 5, 6, 7	3	4074	1VL34	1/2	19111	AK84	50473	A46
	1/2	4	2, 3, 5, 6, 7	4, 5, 6, 7	13580	1VL34	5/8	135279	AK66	101412	A42
	3/4	5	2, 3, 5, 6, 7	6, 7, 8, 9, 10	13580	1VL34	5/8	115716	AK59	101412	A42
	1	6	2, 3, 5, 6, 7	7, 8, 9, 10, 11	13580	1VL34	5/8	135202	AK54	50500	A41
			8	7, 8, 9, 10, 11	110125	1VP34	7/8	135202	AK54	50500	A41
	1-1/2	7	2, 3, 5, 6, 7	9, 10, 11, 12	7962	1VL40	5/8	18797	AK64	52966	A44
				13, 14, 15	7962	1VL40	5/8	135202	AK54	101412	A42
			8	9, 10, 11, 12	106748	1VL40	7/8	18797	AK64	52966	A44
				13, 14, 15	106748	1VL40	7/8	135202	AK54	101412	A42
	2	8	2, 3, 5, 6, 7, 8	13, 14, 15, 16. 17, 18	106748	1VL40	7/8	111689	AK49	50500	A41
	3	9	2, 3	17, 18, 19, 20, 21, 22	7962	1VL40	5/8	19111	AK84	50474	A47
			5, 6, 7, 8	17, 18, 19, 20, 21, 22	106748	1VL40	7/8	19111	AK84	50474	A47

DRIVE COMPONENTS (PULLEYS AND BELTS)—CONTINUED

Table 8. Drives, Pulleys, and Belts for Open-Type Motors —Continued

Unit Size (MBTUh)	Motor			Drive Option (AM)	Motor Pulley			Blower Pulley		Belt	
	HP	Motor Option (AL)	Voltage Option (AK)		PN	Model	Bore Size (Inches)	PN	Model	PN	Model
275, 300	1/3	3	2, 3, 5, 6, 7	3	4074	1VL34	1/2	111609	AK99	50475	A49
	1/2	4	2, 3, 5, 6, 7	4, 5	13580	1VL34	5/8	19111	AK84	50473	A46
	3/4	5	2, 3, 5, 6, 7	5, 6, 7, 8	13580	1VL34	5/8	135279	AK66	50470	A43
	1	6	2, 3, 5, 6, 7	7, 8, 9, 10, 11, 12	13580	1VL34	5/8	135202	AK54	16019	A40
			8	7, 8, 9, 10, 11, 12	110125	1VP34	7/8	135202	AK54	16019	A40
	1-1/2	7	2, 3, 5, 6, 7	9, 10, 11, 12, 13, 14	13580	1VL34	5/8	111689	AK49	16019	A40
			8	9, 10, 11, 12, 13, 14	110125	1VP34	7/8	111689	AK49	16019	A40
	2	8	2, 3, 5, 6, 7, 8	10, 11, 12, 13	106748	1VL40	7/8	115716	AK59	50470	A43
				14, 15. 16	106758	1VL44	7/8	105482	AK56	101412	A42
	3	9	2, 3	15, 16, 17, 18, 19, 20	105476	1VL44	5/8	111609	AK99	88558	A50
			5, 6, 7, 8	15, 16, 17, 18, 19, 20	106758	1VL44	7/8	111609	AK99	88558	A50
	5	10	2, 3	20, 21, 22, 23	111681	1VP50	1-1/8	111609	AK99	50475	A49
			5, 6, 7, 8	20, 21, 22, 23	37451	1VM50	7/8	111609	AK99	50475	A49
350	3/4	5	2, 3, 5, 6, 7	2, 3, 4	13580	1VL34	5/8	19111	AK84	50476	A58
	1	6	2, 3, 5, 6, 7	4, 5, 6, 7	13580	1VL34	5/8	18797	AK64	16131	A54
			8	4, 5, 6, 7	110125	1VP34	7/8	18797	AK64	16131	A54
	1-1/2	7	2, 3, 5, 6, 7	6, 7, 8, 9, 10	13580	1VL34	5/8	115716	AK59	16130	A53
			8	6, 7, 8, 9, 10	110125	1VP34	7/8	115716	AK59	16130	A53
	2	8	2, 3, 5, 6, 7, 8	7, 8, 9	106758	1VL44	7/8	19111	AK84	92402	A59
				10, 11, 12	106758	1VL44	7/8	135279	AK66	16133	A56
	3	9	2, 3	8, 9, 10	7962	1VL40	5/8	50520	AK134	92408	A68
				11, 12, 13, 14	7962	1VL40	5/8	16153	AK104	16137	A62
			5, 6, 7, 8	8, 9, 10	106748	1VL40	7/8	50520	AK134	92408	A68
				11, 12, 13, 14	106748	1VL40	7/8	16153	AK104	16137	A62
	5	10	2, 3	13, 14, 15, 16	111681	1VP50	1-1/8	50520	AK134	16558	A69
				17, 18, 19	110151	1VP44	1-1/8	111609	AK99	16137	A62
			5, 6, 7, 8	13, 14, 15, 16	37451	1VM50	7/8	50520	AK134	16558	A69
				17, 18, 19	106758	1VL44	7/8	111609	AK99	16137	A62
400	3/4	5	2, 3, 5, 6, 7	3	13580	1VL34	5/8	19111	AK84	50476	A58
	1	6	2, 3, 5, 6, 7	4, 5, 6, 7	13580	1VL34	5/8	18797	AK64	16131	A54
			8	4, 5, 6, 7	110125	1VP34	7/8	18797	AK64	16131	A54
	1-1/2	7	2, 3, 5, 6, 7	6, 7, 8, 9, 10	13580	1VL34	5/8	115716	AK59	16130	A53
			8	6, 7, 8, 9, 10	110125	1VP34	7/8	115716	AK59	16130	A53
	2	8	2, 3, 5, 6, 7, 8	7, 8, 9	106758	1VL44	7/8	19111	AK84	92402	A59
				10, 11	106758	1VL44	7/8	135279	AK66	16133	A56
	3	9	2, 3	8, 9, 10	7962	1VL40	5/8	50520	AK134	92408	A68
				11, 12, 13, 14, 15	7962	1VL40	5/8	16153	AK104	16137	A62
			5, 6, 7, 8	8, 9, 10	106748	1VL40	7/8	50520	AK134	92408	A68
				11, 12, 13, 14, 15	106748	1VL40	7/8	16153	AK104	16137	A62
	5	10	2, 3	12, 14, 15, 16	111681	1VP50	1-1/8	50520	AK134	16558	A69
				17, 18, 19	110151	1VP44	1-1/8	111609	AK99	16137	A62
			5, 6, 7, 8	12, 14, 15, 16	37451	1VM50	7/8	50520	AK134	16558	A69
				17, 18, 19	106758	1VL44	7/8	111609	AK99	16137	A62

Table 9. Drives, Pulleys, and Belts for TEFC-Type Motors

Unit Size (MBTUh)	Motor			Drive Option (AM)	Motor Pulley			Blower Pulley		Belt	
	HP	Motor Option (AL)	Voltage Option (AK)		PN	Model	Bore Size (Inches)	PN	Model	PN	Model
150	1/3	20	2,3,5,6,7	1, 2, 3, 4	4074	1VL34	1/2	19111	AK84	50472	A45
				5, 6	4074	1VL34	1/2	18797	AK64	101412	A42
	1/2	21	2,3,5,6,7,8	5, 6, 7, 8	13580	1VL34	5/8	18797	AK64	101412	A42
	3/4	22	2,3,5,6,7,8	7, 8, 9, 10, 11	13580	1VL34	5/8	135202	AK54	16019	A40
	1	23	3,5,6,7,8	10, 11, 12, 13	13580	1VL34	5/8	105481	AK46	105493	A39
	1-1/2	24	2,3,5,6,7	11, 12, 13, 14, 15, 16	7962	1VL40	5/8	135202	AK54	101412	A42
			8	11, 12, 13, 14, 15, 16	106748	1VL40	7/8	135202	AK54	101412	A42
	2	25	3,5,6,7,8	17	106748	1VL40	7/8	135200	AK51	50500	A41

Table 9. Drives, Pulleys, and Belts for TEFC-Type Motors —Continued

Unit Size (MBTUh)	Motor			Drive Option (AM)	Motor Pulley			Blower Pulley		Belt	
	HP	Motor Option (AL)	Voltage Option (AK)		PN	Model	Bore Size (Inches)	PN	Model	PN	Model
200	1/3	20	2,3,5,6,7	3	4074	1VL34	1/2	19111	AK84	50472	A45
	1/2	21	2,3,5,6,7,8	5, 6, 7	13580	1VL34	5/8	105483	AK69	50470	A43
	3/4	22	2,3,5,6,7,8	6, 7, 8, 9, 10	13580	1VL34	5/8	105482	AK56	50500	A41
	1	23	3,5,6,7,8	7, 8, 9, 10, 11	13580	1VL34	5/8	105482	AK56	50500	A41
	1-1/2	24	2,3,5,6,7	9, 10, 11, 12, 13, 14	7962	1VL40	5/8	115716	AK59	50470	A43
			8	9, 10, 11, 12, 13, 14	106748	1VL40	7/8	115716	AK59	50470	A43
	2	25	3,5,6,7,8	13, 14, 15, 16	106748	1VL40	7/8	135202	AK54	101412	A42
250	1/3	20	2,3,5,6,7	3	4074	1VL34	1/2	19111	AK84	50473	A46
	1/2	21	2,3,5,6,7,8	4, 5, 6, 7	13580	1VL34	5/8	135279	AK66	101412	A42
	3/4	22	2,3,5,6,7,8	6, 7, 8, 9, 10	13580	1VL34	5/8	115716	AK59	101412	A42
	1	23	3,5,6,7,8	7, 8, 9, 10, 11	13580	1VL34	5/8	135202	AK54	50500	A41
	1-1/2	24	2,3,5,6,7	9, 10, 11, 12	7962	1VL40	5/8	18797	AK64	52966	A44
				13, 14, 15	7962	1VL40	5/8	135202	AK54	101412	A42
			8	9, 10, 11, 12	106748	1VL40	7/8	18797	AK64	52966	A44
				13, 14, 15	106748	1VL40	7/8	135202	AK54	101412	A42
	2	25	3,5,6,7,8	13, 14, 15, 16. 17, 18	106748	1VL40	7/8	111689	AK49	50500	A41
	3	26	3,8	17, 18, 19, 20, 21, 22	110151	1VP44	1-1/8	111689	AK49	50500	A41
			5,6,7	17, 18, 19, 20, 21, 22	106748	1VL40	7/8	19111	AK84	50474	A47
275, 300	1/3	20	2,3,5,6,7	3	4074	1VL34	1/2	111609	AK99	50475	A49
	1/2	21	2,3,5,6,7,8	4, 5	13580	1VL34	5/8	19111	AK84	50473	A46
	3/4	22	2,3,5,6,7,8	5, 6, 7, 8	13580	1VL34	5/8	135279	AK66	50470	A43
	1	23	3,5,6,7,8	7, 8, 9, 10, 11, 12	13580	1VL34	5/8	135202	AK54	16019	A40
	1-1/2	24	2,3,5,6,7	9, 10, 11, 12, 13, 14	13580	1VL34	5/8	111689	AK49	16019	A40
			8	9, 10, 11, 12, 13, 14	110125	1VP34	7/8	111689	AK49	16019	A40
	2	25	3,5,6,7,8	10, 11, 12, 13	106748	1VL40	7/8	115716	AK59	50470	A43
				14, 15. 16	106758	1VL44	7/8	105482	AK56	101412	A42
	3	26	3,8	15, 16, 17, 18, 19, 20	110151	1VP44	1-1/8	111609	AK99	88558	A50
			5,6,7	15, 16, 17, 18, 19, 20	106748	1VL44	7/8	111609	AK99	88558	A50
	5	27	3,5,6,7,8	20, 21, 22, 23	111681	1VP50	1-1/8	111609	AK99	50475	A49
350	3/4	22	2,3,5,6,7,8	2, 3, 4	13580	1VL34	5/8	19111	AK84	50476	A58
	1	23	2,3,5,6,7,8	4, 5, 6, 7	13580	1VL34	5/8	18797	AK64	16131	A54
	1-1/2	24	2,3,5,6,7	6, 7, 8, 9, 10	13580	1VL34	5/8	115716	AK59	16130	A53
			8	6, 7, 8, 9, 10	110125	1VP34	7/8	115716	AK59	16130	A53
	2	25	3,5,6,7,8	7, 8, 9	106758	1VL44	7/8	19111	AK84	92402	A59
				10, 11, 12	106758	1VL44	7/8	135279	AK66	16133	A56
	3	26	3,8	8, 9, 10	110151	1VP44	1-1/8	113372	AK144	114257	A70
				11, 12, 13, 14	111681	1VP50	1-1/8	113372	AK144	124347	A71
			5,6,7	8, 9, 10	106748	1VL40	7/8	50520	AK134	92408	A68
				11, 12, 13, 14	106748	1VL40	7/8	16153	AK104	16137	A62
	5	27	3,5,6,7,8	13, 14, 15, 16	111681	1VP50	1-1/8	50520	AK134	16558	A69
				17, 18, 19	110151	1VP44	1-1/8	111609	AK99	16137	A62
400	3/4	22	2,3,5,6,7,8	3	13580	1VL34	5/8	19111	AK84	50476	A58
	1	23	2,3,5,6,7,8	4, 5, 6, 7	13580	1VL34	5/8	18797	AK64	16131	A54
	1-1/2	24	2,3,5,6,7	6, 7, 8, 9, 10	13580	1VL34	5/8	115716	AK59	16130	A53
			8	6, 7, 8, 9, 10	110125	1VL34	7/8	115716	AK59	16130	A53
	2	25	3,5,6,7,8	7, 8, 9	106758	1VL44	7/8	19111	AK84	92402	A59
				10, 11	106758	1VL44	7/8	135279	AK66	16133	A56
	3	26	3,8	8, 9, 10, 11	110151	1VP44	1-1/8	113272	AK144	114257	A70
				12, 13, 14, 15	111681	1VP50	1-1/8	50520	AK134	16558	A69
			5,6,7	8, 9, 10	106748	1VL40	7/8	50520	AK134	92408	A68
				11, 12, 13, 14, 15	106748	1VL40	7/8	16153	AK104	16137	A62
	5	27	3,5,6,7,8	12, 14, 15, 16	111681	1VP50	1-1/8	50520	AK134	16558	A69
				17, 18, 19	110151	1VP44	1-1/8	111609	AK99	16137	A62

BLOWER COMPONENTS

NOTES:

- **The assembly shown in Figure 4 is the strut base, dual blowers, and motor mounting plate for 2- to 5-HP belt-driven motors on unit sizes 250, 300, 350, and 400,**
- **The assembly shown in Figure 5 is the motor-mounting plate assembly used on a unit with a 1/3- to 1.5-HP belt-driven motor.**

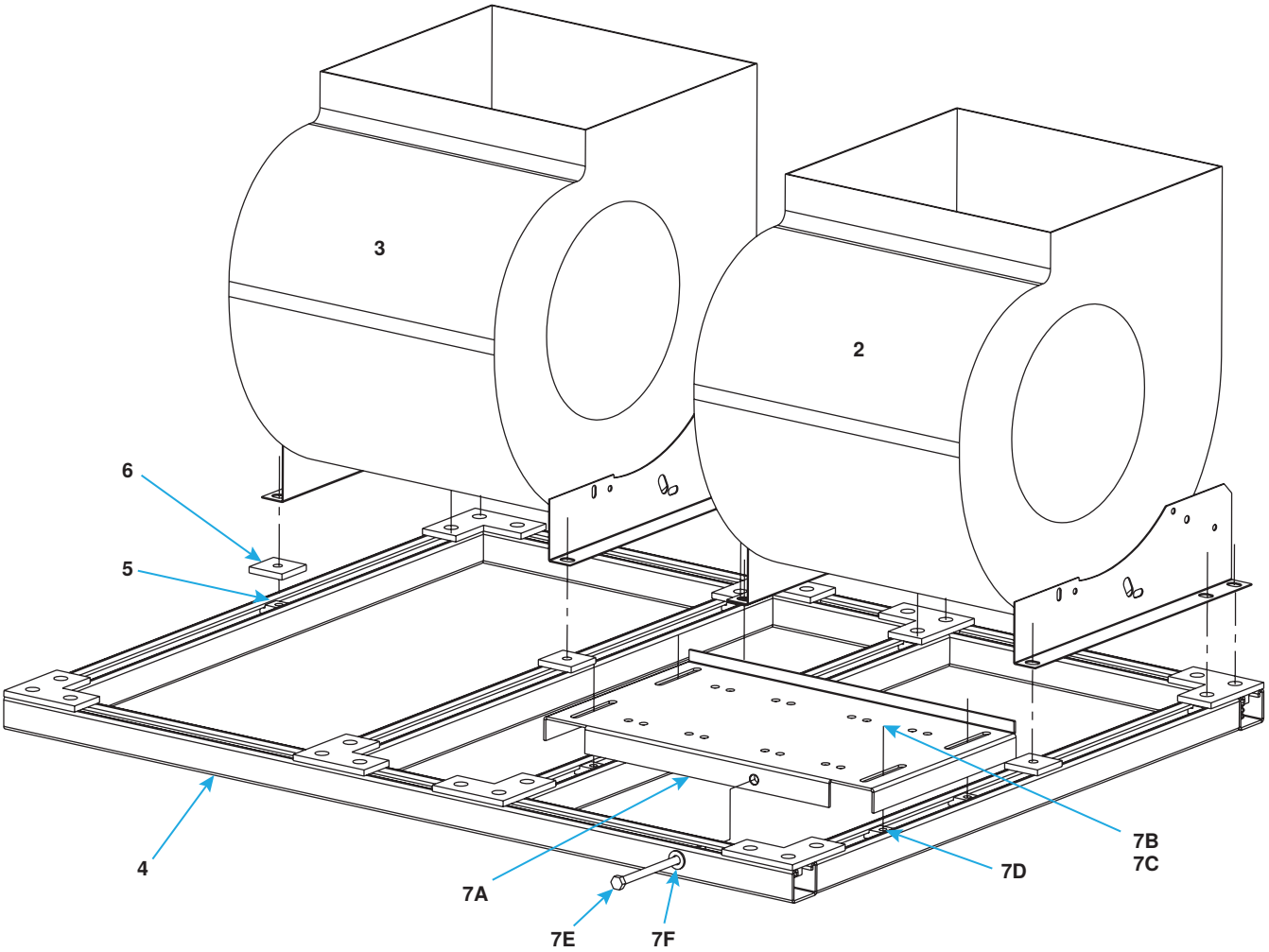

Figure 4. Typical Blower Components (Refer to Table 10)

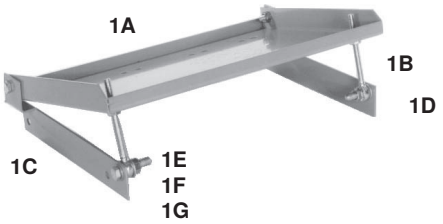

Figure 5. Motor Mounting Plate Assembly (Refer to Table 11)

Table 10. Blower Components for Units with 2- to 5-HP Belt-Drive Blower Motors								
Item No.	Component	Description	Unit Size (MBTUh)					
			150	200	250	275, 300	350	400
			2-HP Motors		2- to 5-HP Motors			
			PN (Quantity)*					
1	Blower	Lau #A12-9	100657	—	—		—	
		Lau #A12-2	—	1360	—		—	
2		Right (Lau #2A10-10A RH)	—		24230		—	
		Right (Lau #2A12-9A RH)	—		—		166784	
		Left (Lau #2A10-10A LH)	—		24229		—	
3		Left (Lau #2A12-9A LH)	—		—		166785	
4	Strut assembly	Base	—		195003		195004	
5	Nut	Spring	—		177161 (4)		177161 (8)	
6	Fitting	Flat plate	—		178180 (4)		178180 (8)	
7	Bearing	Fafnir #RCSM-1	10437 (2)		10437 (2)		10437 (2)	
7A	Mounting plate	Motor, assembly	166127**		195070		195071	
7B	Bolt	Hex head, 5/16-18 × 1/1/4	—		178188 (4)		178188 (4)	
7C	Washer	Flat	—		22761 (4)		22761 (4)	
7D	Nut	Spring, 5/16-inch	—		177161 (4)		177161 (4)	
7E	Bolt	Adjustment, 3/8-18 × 6	—		49809		49809	
7F	Washer	Flat	—		6593		6593	
8	Mounting assembly	Blower	163174	163175	195080	262466	195081	
8A	Mount	Blower	160136	163425	166320		160176	
8B	Support angle	Blower mount	160179 (2)		—		—	
8C	Brace	Blower mount	160628	160629	160629		160629	
8D	Plug	7/8-inch (Heyco #DP8753703)	16452 (2)		16452 (2)		16452 (2)	
8E	Baffle	Air	163426 (2)	163426 (2)	163430 (2)		164699 (2)	163426 (2)
8F	Connector	Blower discharge	—		194995 (2)		194996 (2)	
8G	Gasket	Foam, 1-1/8 × 37	—		195085 (2)		—	
		Foam, 1-1/8 × 40	—		—		195086 (2)	
9	Threaded insert	5/16-8	124260 (6)		124260 (8)			
10	Mounting angle	Blower, left	166149	166149	195067 (2)		—	
11		Blower, right	166150	166150	195068 (2)		—	
12	Washer	Flat, 5/16-inch	—		22761 (4)		22761 (8)	
13	Bolt	Hex head, 5/16-18 × 1-1/4	—		178188 (4)		178188 (8)	
14	Blower shaft	1 × 22	11303		—		—	
		1 × 44-5/8	—		10121		10121	
14A	Key	Blower shaft	—		16099		16099	

*Quantity is one (1) unless otherwise indicated.

Refer to item 1, **Table 11.

BLOWER COMPONENTS—CONTINUED

Table 11. Blower Components for Units with 1/3- to 1.5-HP Belt-Drive Blower Motors

Item No.	Component	Description	Unit Size (MBTUh)					
			150	200	250	275, 300	350	400
			1/3- to 1.5-HP Motors		3/4- to 1.5-HP Motors			
			PN (Quantity)*					
1	Mounting plate	Motor, assembly	166127		166127		166127	
1A	Mounting plate	Motor	12578		12578		12578	
1B	Bolt		12489 (2)		12489 (2)		12489 (2)	
1C	Support	Left	87015		87015		87015	
1D		Right	87016		87016		87016	
1E	Screws	1-1/2-inch	16248 (4)		16248 (4)		16248 (4)	
1F	Nut		6554 (8)		6554 (8)		6554 (8)	
1G	Washer		1087 (12)		1087 (12)		1087 (12)	
2	Mounting assembly	Blower	163174	163175	166744	166745	164517	
2A	Mount	Blower	160136	163425	166320		160176	
2B	Support angle	Blower mount	160179 (2)		160179 (4)		170200 (4)	
2C	Brace	Blower mount	160628	160629	166319 (2)		160628 (2)	
2D	Plug	7/8-inch (Heyco #DP8753703)	16452 (2)		16452 (2)		16452 (2)	
2E	Baffle	Air	163426 (2)		163430 (2)		164699	
3	Assembly	Blower	169917	169918	166128		166129	
3A	Blower	Lau #A12-9AC	100657	—	—		—	
		Lau #A12-12AC	—	1360	—		—	
		Right (Lau #2A10-10A)	—		24230		—	
		Right (Lau #2A12-9A)	—		—		166784	
		Left (Lau #2A10-10A)	—		24229		—	
		Left (Lau #2A12-9A)	—		—		166785	
3B	Threaded insert	5/16-8	124260 (6)		124260 (12)		124260 (12)	
3C	Mounting angle	Blower, left	166149	166149	166149 (2)		166149 (2)	
3D		Blower, right	166150	166150	166150 (2)		166150 (2)	
4	Blower shaft	1 × 22	11303	—	11303	—	11303	—
		1 × 44-5/8	—	10121	—	10121	—	10121
5	Bearing	Fafnir #RCSM-1	10437 (2)		10437 (2)		10437 (2)	

*Quantity is one (1) unless otherwise indicated.

Table 12. Blower Components for Units with Direct-Drive Blower Motors

Component	Description	Unit Size (MBTUh)					
		150	200	250	275, 300	350	400
		PN (Quantity)*					
Mounting assembly	Blower	163174	163175	163176	163177	164517	
Mount	Blower	160136	163425	160175		160176	
Support angle	Blower mount	160179 (2)		160179 (4)		170200 (4)	
Brace	Blower mount	160628	160629	160628 (2)		160628 (2)	
Plug	7/8-inch (Heyco #DP8753703)	16452 (2)		16452 (2)		16452 (2)	
Baffle	Air	163426 (2)		163430 (2)		164699	
Assembly	Blower	163428	163429	163428 (2)		163428 (2)	
Blower	9-inch (Lau #DD12-9-A)	164323	—	164323 (2)		164323 (2)	
	12-inch (Lau #DD12-12-A)	—	164324	—		—	
Mounting angle	Blower, left	166149		166149	166149 (2)	166149 (2)	
	Blower, right	166150		166150	166150 (2)	166150 (2)	
Threaded insert	5/16-8	124260 (4)		124260 (8)		124260 (8)	
Motor	Blower	164329		164329 (2)		164329 (2)	
Band	Motor (Triangle #TR5868)	51221		51221 (2)		51221 (2)	
Support arm	Motor (Triangle #TR8053B)	164325 (3)		164325 (6)		164325 (6)	
Restrictor	Inlet	165178	165179	165178 (2)	165180 (2)	165181 (2)	165179 (2)
Mounting bracket	Inlet restrictor	165182 (3)		165182 (6)		165182 (6)	

*Quantity is one (1) unless otherwise indicated.

CABINET COMPONENTS

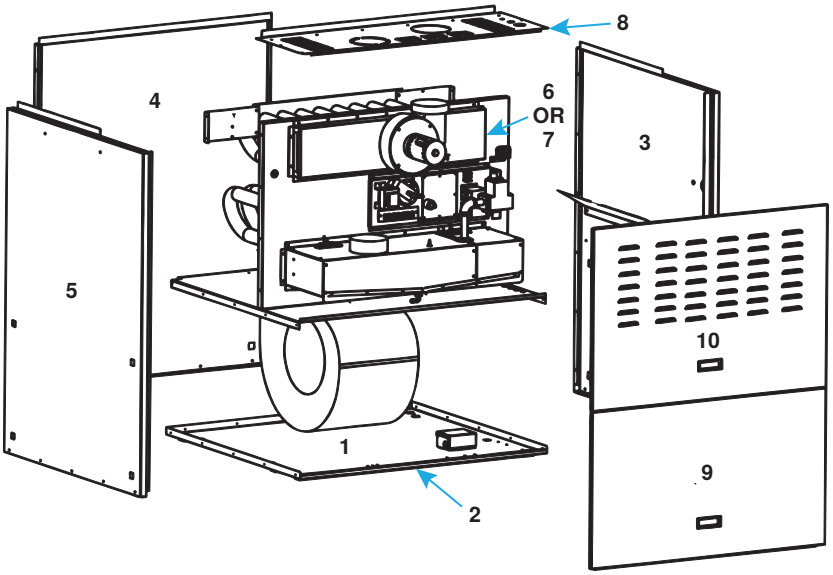

Figure 6. Cabinet Components (Refer to Table 13)

Table 13. Cabinet Components

Item No.	Component	Description	Unit Size (MBTUh)					
			150	200	250	275, 300	350	400
			PN (Quantity)*					
1	Panel	Bottom	160133		160134		—	
		Bottom, front	—		—		170198	—
		Bottom, rear, units without inlet base	—		—		170199	
		Bottom, rear, units with inlet base	—		—		176361	
1A	Insulation	Bottom panel	177624		177627		177628	
2	Support leg	Units with direct-drive motor	161155 (2)		161156 (2)		161156 (2)	
		Units with 1/3- to 1.5-HP belt-drive motor	161155		161156		161156	
		Front, units with 1/3- to 1.5-HP belt-drive motor	195177	195179	195247		195247	
		Rear, units with 1/3- to 1.5-HP belt-drive motor	195178	195180	195248		195248	
		Units with 2- to 5-HP belt-drive motor	—		161156 (3)		161156 (3)	
3	Side panel assembly	Left	163183	163184	163451	163452	163453	164516
3A	Panel	Side, left	160125		160125		160126	
3B	Plug	5/8-inch (Heyco #DP625)	111096		111096		111096	
3C	Deflector	Air	164701	164700	164701	165017	164701	164700
3D	Insulation	Left side panel	177622		177622		177626	
			160896		160896		163173	
4	Panel assembly	Rear, includes insulation	163170		163171		163172	
5	Side panel assembly	Right	175274	175275	175276	175277	175278	175279
5A	Panel	Side, right	160123		160123		160124	
5B	Deflector	Air	164701	164700	164701	165017	164701	164700
5C	Insulation	Right side panel	177622		177622		177626	
			160896		160896		163173	
5D			29871		29871		29871	
5E	Plug	5/8-inch (Heyco #DP625)	111096		111096		111096	
6	Flue wrapper	Assembly, 409SS, includes condensate drain connection, option AD4	258960	258961	258962	258963	258964	258965
6A	Gasket	Top/bottom	258994 (2)		258994 (2)		258994 (2)	
6B		Side	258995 (2)		258996 (2)		258997 (2)	
6C	Hose barb	1/4 x 1/4 NPT male, brass	258998		258998		258998	

*Quantity is one (1) unless otherwise indicated.

CABINET COMPONENTS—CONTINUED

Table 13. Cabinet Components—Continued								
Item No.	Component	Description	Unit Size (MBTUh)					
			150	200	250	275, 300	350	400
			PN (Quantity)*					
7	Flue wrapper	Assembly, aluminized	160186	160187	160188	160189	160190	160191
7A	Gasket	Top/bottom	147651 (2)		147651 (2)		147651 (2)	
7B		Side	161160 (2)		161161 (2)		161162 (2)	
8	Panel	Top	160130		160131	160194	160132	
8A	Retainer	Top panel	174866		174866		174866	
9	Access door	Bottom, assembly, includes handle	165046		165047		165047	
10		Top, assembly, includes handle	165048		165049		165049	
11	Vibration isolator	Kit, includes four (4) pads, option PC4	166769		166769		166770	
11A		Black, #120, orange marking (Kinetics #RCB)	166720 (4)		166720 (4)		—	
		Black, #220, green marking (Kinetics #RCB)	—		—		166721 (4))	
12	Paint	Touchup, white, 11-ounce spray can	201805		201805		201805	
13	Capillary tube	Limit control, 51 inches long	165030		—		—	
		Limit control, 55-1/2 inches long	—		165031		—	
		Limit control, 62-5/8 inches long	—		—		165032	
14	Bracket	Limit control	141676		141676		141676	
*Quantity is one (1) unless otherwise indicated.								

VENTER COMPONENTS

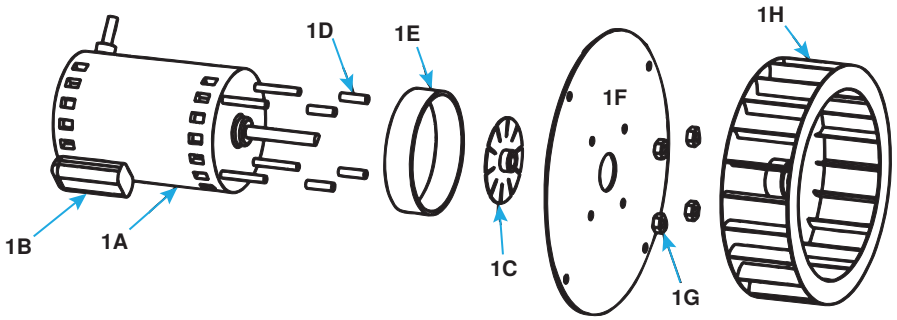

Figure 7. Venter Motor and Wheel Assembly (Refer to Table 14)

Table 14. Venter Components								
Item No.	Component	Description	Unit Size (MBTUh)					
			150	200	250	275, 300	350	400
			PN (Quantity)*					
1	Motor and wheel	Assembly	174010	162895	162895		164542	
1A	Motor	Venter	161416		161416		205748	
1B	Capacitor	Motor	163894	—	—		—	
1C	Fan**	2-1/4-inch diameter × 3/8-inch bore (PM Motor Co)	141570		141570		141570	
1D	Spacer	Spirol, #3 × 3/4, ***discontinued*** OCT 2007	97721 (4)		97721 (4)		97721 (4)	
1E	Support ring	Motor, width dimension ***changed*** OCT 2007	125346		125346		125346	
1F	Plate	Motor	151515	160930	160930		160930	
1G	Nut	Kep, #8-32	31522 (4)		31522 (4)		31522 (4)	
1H	Wheel	2 x 6-1/4 diameter, 3/8 bore	195666		195666		195666	
2	Gasket	Motor plate	155652		155652		155652	
3	Housing assembly	Includes housing, collar, and static pressure tap	164539	164540	164540	164541	164697	
4	Gasket	Venter	155650		155650		155649	
*Quantity is one (1) unless otherwise indicated.								
**Install centered with hub away from motor.								

VENT/COMBUSTION AIR COMPONENTS

NOTE: A concentric adapter box is used on separated-combustion units. The combustion air pipe connects to both sides—heater side and vent terminal side—of the box. The outside portion of the combustion air pipe connects to the vent terminal side. The vent pipe extends through the box and runs concentric through the outside portion of the combustion air pipe.

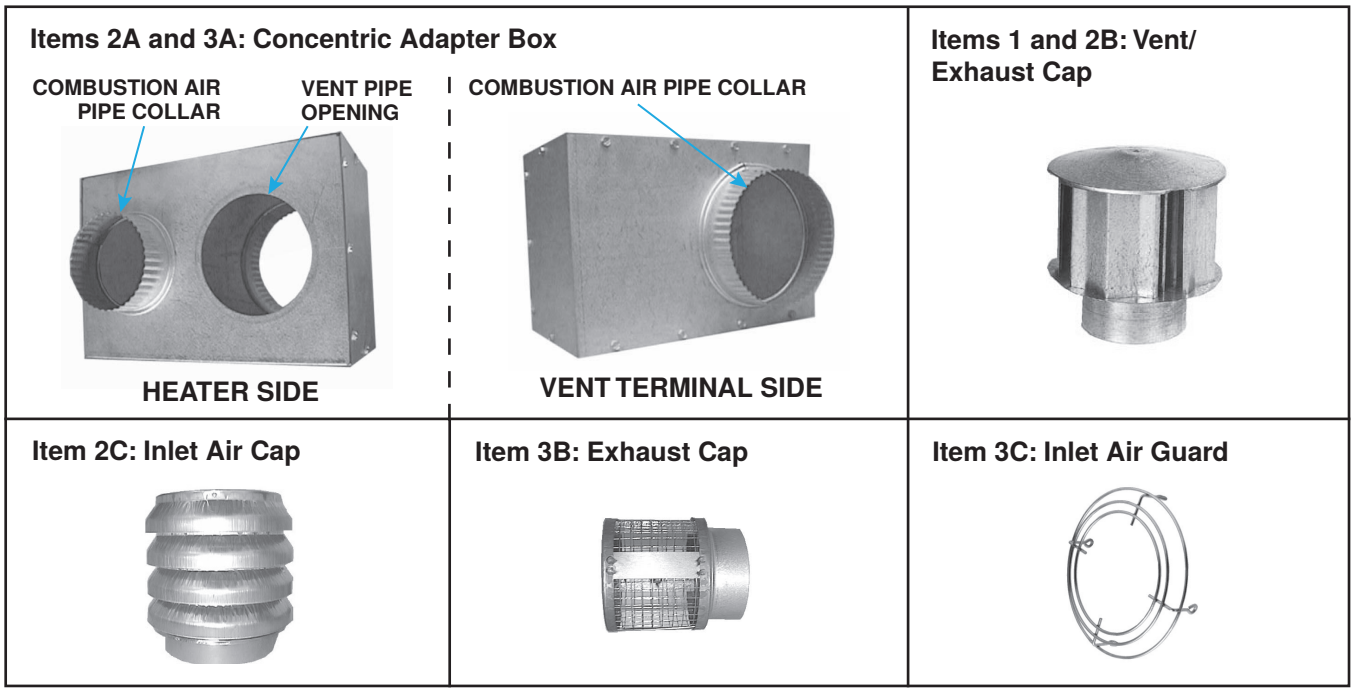

Figure 8. Vent/Combustion Air Components (Refer to Table 15)

Table 15. Vent/Combustion Air Components

Item No.	Component	Description	Unit Size (MBTUh)	
			150, 200	250, 275, 300, 350, 400
			PN (Quantity)*	
1	Vent cap	Option CC1, 5-inch	111849	—
		Option CC1, 6-inch	—	111850
2	Vent/combustion air kit	Vertical, option CC2	205895	205896
2A	Concentric adapter box		205884	205885
2B	Cap	Exhaust, 4-inch	110051	—
		Exhaust, 5-inch	—	110052
2C		Inlet air, 6-inch	155635	—
		Inlet air, 8-inch	—	53330
2D	Bracket	Concentric adapter box	207232 (2)	
2E	Clear sealant	3-ounce tube (DC #732)	53335	53335
3	Vent/combustion air kit	Horizontal, option CC6	205882	205883
3A	Concentric adapter box		205884	205885
3B	Cap	Exhaust	155096	53316
3C	Inlet guard	Assembly	151755	124940
3D	TEKS screw	#10-16 × 1/2, self-drilling	37661 (4)	
3E	Bracket	Concentric adapter box	207232 (2)	
3F	Clear sealant	3-ounce tube (D.C. #732)	53335	53335

*Quantity is one (1) unless otherwise indicated.

BURNER BOX AND HEAT EXCHANGER COMPONENTS

NOTE: Burner box covers are redesigned for easier access. If replacing burner box covers (item 15 or 16) on a unit manufactured *before* JAN 2001, it is necessary to order the front cover (item 14), front cover gasket (item 14A), left cover (item 15), left cover gasket (item 15B), and right cover (item 16).

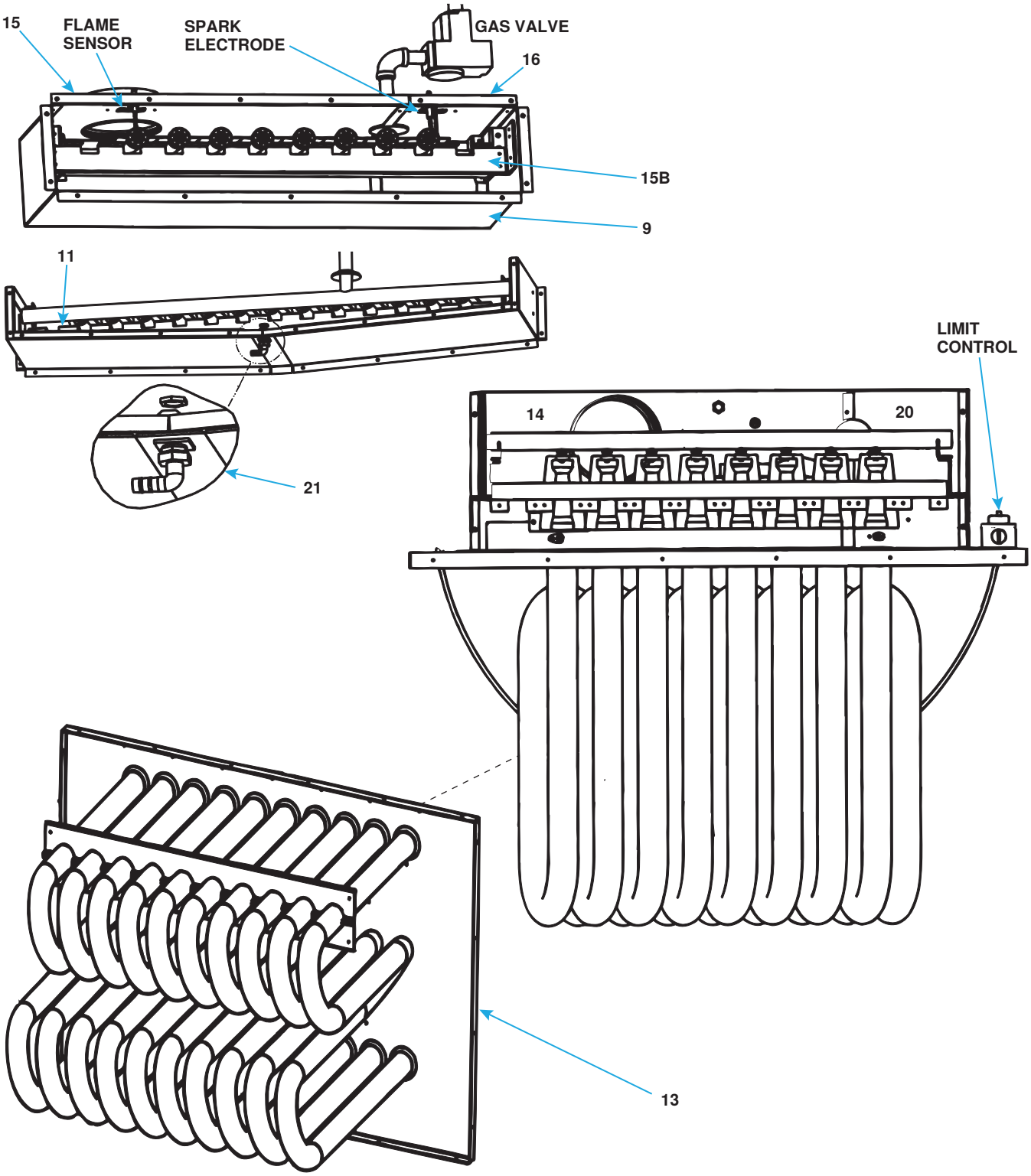

Figure 9. Burner Box and Heat Exchanger Components (Refer to Table 16)

Table 16. Burner Box and Heat Exchanger Components

Item No.	Component	Description	Unit Size (MBTUh)						
			150	200	250	275	300	350	400
			PN (Quantity)*						
1	Burner box	Aluminized steel	193997		193998			193999	
		Stainless steel	258985		258986			258987	
2	Seal	Drain hole	165741						
3	Manifold	Burner	151787	151788	160931	160932		160933	160934
3A	Support	Burner/manifold	160437 (2)		160928 (2)				
4	Burner rack	Assembly	163104	163105	163106	163107		163108	163109
4A	Support rack	Burner	160625		160626			160627	
4B	Burner	Beckett #RZ11	164870					—	
		Beckett #RZ10	—			164869	—	164869	
5	Air baffle	Burner box, left	—					166317	
6		Burner box, right	—					166318	
7	Burner box gasket	Front bottom	162806 (2)		162807 (2)			162808 (2)	
8		Front side	162800 (2)		162800 (2)			169939 (2)	
9		Top side	162801 (2)		162801 (2)				
10		Side	162809 (2)					169940 (2)	
11		Rear bottom	161171 (2)		161172 (2)			161173 (2)	
12	Support	Tube clamp	163435 (2)	163436 (2)	163437 (2)	163438 (2)		163439 (2)	163440 (2)
13	Heat exchanger assembly	Aluminized steel	169963	169964	169965	169966		169967	169968
		Stainless steel	259384	259385	259386	259387		259388	259389
14	Burner box cover	Front	194124		194125			194126	
14A	Front burner box cover gasket	Left	194127		162815			162816	
		Right						194132	
15	Burner box cover assembly	Left	194006	194007	194008	194009		162906	162907
15A	Burner box cover	Left, with collar	194003	194004	194024	194025		—	
		Left, without collar	—					160936	160937
15B	Gasket	Left burner box cover	162814		162815			162816	
16	Burner box cover assembly	Right	194011	194012	194013	194014		194015	194016
16A	Right burner box cover gasket	Top	162803						
16B		Front	162804						
16C		Right	162811		162812			162813	
17	Air inlet box	On top of burner box	—					166315	
17A	Air inlet box gasket	Side	—					169937 (2)	
17B		Front	—					169936	
18	Air inlet cover	Includes inlet air collar	—					166530	
19	Viewport	Left	115984						
19A	Gasket	Left viewport	116037						
19B	Retainer		142711						
20	Pressure tap	Static	116043 (2)						
21	Drain kit	Burner condensate	165951						
21A	Tubing	3/8-inch ID × 6-foot-long	165955						
21B	Tube fitting	3/8 × 1/4 NPT × 90-degree	165952						
21C	Nut	1/4 NPT, brass	110628						
21D	Locknut	Hex, 1/4 NPT	171527						
21E	Washer	Sealing	165953						
21F	Wire tie	Nylon	20913						
21G	Bushing	Snap	87556						

*Quantity is one (1) unless otherwise indicated.

BURNER BOX AND HEAT EXCHANGER COMPONENTS—CONTINUED

Table 17. Burner Orifices

Installation Location	Installation Elevation (Feet (Meters))	Gas Type	Unit Size (MBTUh)						
			150	200	250	275	300	350	400
			PN, Drill Size (Quantity)						
US, Canada	0–2000 (0 –610)	NG	164866, 2.10 mm (8)	11833, #44 (10)	11833, #44 (13)	16590, #46 (15)	11833, #44 (15)	11835, #37 (12)	45870, #38 (14)
		LP	97359, 1.25 mm (8)	11830, #55 (10)	97359, 1.25 mm (13)	11830, #55 (15)		9789, #53 (12)	61653, 1.55 mm (14)
US	2001–3000 (611–915)	NG	84853, #47 (8)	38678, #45 (10)	38678, #45 (13)	16590, #46 (15)	38678, #45 (15)	45870, #38 (12)	45871, #39 (14)
		LP	97359, 1.25 mm (8)	11830, #55 (10)	97359, 1.25 mm (13)	11830, #55 (15)		11834, #54 (12)	9789, #53 (14)
Canada	2001–4500 (611–1373)	NG	40414, #48 (8)	38678, #45 (10)	38678, #45 (13)	38678, #45 (15)		45871, #39 (12)	11792, #41 (14)
		LP	63003, 1.20 mm (8)	11830, #55 (10)	63003, 1.20 mm (13)	11830, #55 (15)		11834, #54 (12)	61652, 1.45 mm (14)
US	3001–4000 (916–1220)	NG	84853, #47 (8)	38678, #45 (10)	38678, #45 (13)	84853, #47 (15)	38678, #45 (15)	45871, #39 (12)	87391, #40 (14)
		LP	63003, 1.20 mm (8)	11830, #55 (10)	63003, 1.20 mm (13)	11830, #55 (15)		11834, #54 (12)	9789, #53 (14)
	4001–5000 (1221–1525)	NG	40414, #48 (8)	38678, #45 (10)	38678, #45 (13)	84853, #47 (15)	38678, #45 (15)	45871, #39 (12)	11792, #41 (14)
		LP	63003, 1.20 mm (8)	11830, #55 (10)	63003, 1.20 mm (13)	11830, #55 15)		11834, #54 (12)	61652, 1.45 mm (14)
	5001–6000 (1526–1830)	NG	40414, #48 (8)	16590, #46 (10)	16590, #46 (13)	40414, #48 (15)	16590, #46 (15)	87391, #40 (12)	11792, #41 (14)
		LP	63003, 1.20 mm (8)	39658, #56 (10)	63003, 1.20 mm (13)	39658, #56 (15)		11834, #54 (12)	61652, 1.45 mm (14)
	6001–7000 (1831–2135)	NG	40414, #48 (8)	84583, #47 (10)	84583, #47 (13)	39651, #49 (15)	84583, #47 (15)	11792, #41 (12)	84437, #42 (14)
		LP	39658, #56 (8)	39658, #56 (10)	39658, #56 (13)	39658, #56 (15)		11834, #54 (12)	61652, 1.45 mm (14)
	7001–8000 (2136–2440)	NG	39651, #49 (8)	84583, #47 (10)	84583, #47 (13)	39652, #50 (15)	84583, #47 (15)	84437, #42 (12)	84437, #42 (14)
		LP	63922, 1.15 mm (8)	39658, #56 (10)	63922, 1.15 mm (13)	39658, #56 (15)		11834, #54 (12)	11834, #54 (14)
	8001–9000 (2441–2745)	NG	39651, #49 (8)	40414, #48 (10)	40414, #48 (13)	39652, #50 (15)	40414, #48 (15)	84437, #42 (12)	11828, #43 (14)
		LP	63922, 1.15 mm (8)	39658, #56 (10)	63922, 1.15 mm (13)	39658, #56 (15)		11830, #55 (12)	11834, #54 (14)

NOTE: Unit sizes 250 and 300 have been discontinued.

ACCESSORIES/OPTIONS

ACU Cabinet Components

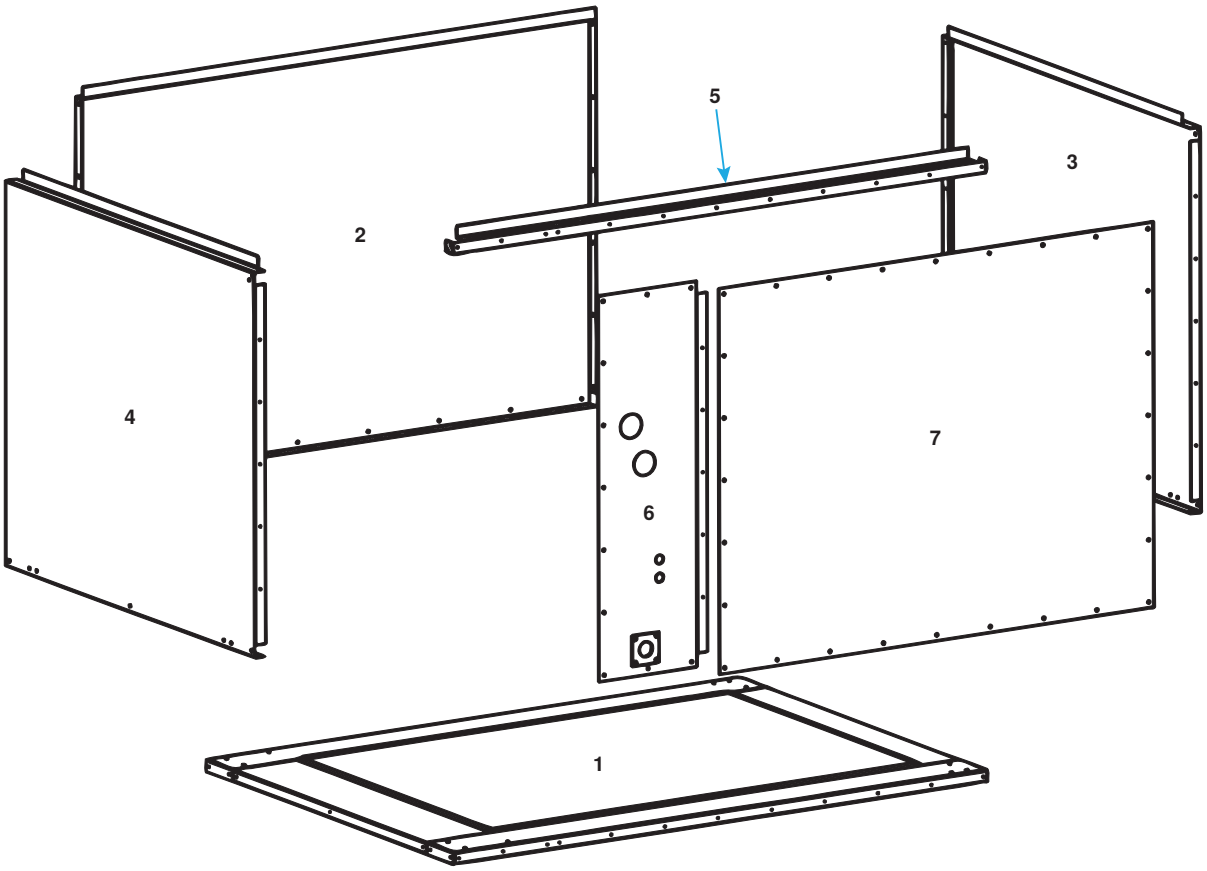

Figure 10. ACU Cabinet Assembly (Refer to Table 18)

Table 18. ACU Cabinet Components

Item No.	Component	Unit Size (MBTUh)								
		150, 200			250, 275, 300			350, 400		
		ACU Cooling Coil (C) Option								
		C060	C072	C090	C090	C120	C150	C120	C150	C180
		PN (Quantity)*								
1	Casing inner assembly	164749			164750			164751		
2	Casing back assembly	165988			165989			165990		
3	Casing right side assembly	165991			165991			165992		
4	Casing left side assembly	165993			165993			165994		
5	Casing top front	164735			164736			164736		
6	Casing panel assembly	165995	174862	165996	165996			165997		
6A	Casing panel	164724		164725	164725			164726		
6B	Insulation	—			—			—		
6C	Grommet, 3/8 (Kennerd #375-C)	165171	—	165171 (2)	165171 (2)		—	165171 (2)	—	
	Grommet, 1/2 (Kennerd #500)	—	111067	—	—		111067 (2)	—	111067 (2)	
	Grommet, 7/8 (Kennerd 1020-T)	102607		102607 (2)	102607 (2)			102607 (2)		
6D	Drain cover gasket	164705			164705			164705		
6E	Drain cover plate	164706			164706			164706		
7	Door assembly	165998			165999			166000		
8	Coil clamp	171276 (2)			171276 (2)			171276 (2)		

*Quantity is one (1) unless otherwise indicated.

ACU Cabinet Components—Continued

⚠ CAUTION ⚠

TXVs are designed for specific refrigerant—R-410A or R22—and must be sized to match the circuit. Failure to properly select and size the TXV will prevent the system from operating properly and will void the manufacturer's warranty.

NOTE: The TXV is attached at the liquid line connection with the bulb on the suction line. Follow the manufacturer's instructions to install the TXV (see Figure 11).

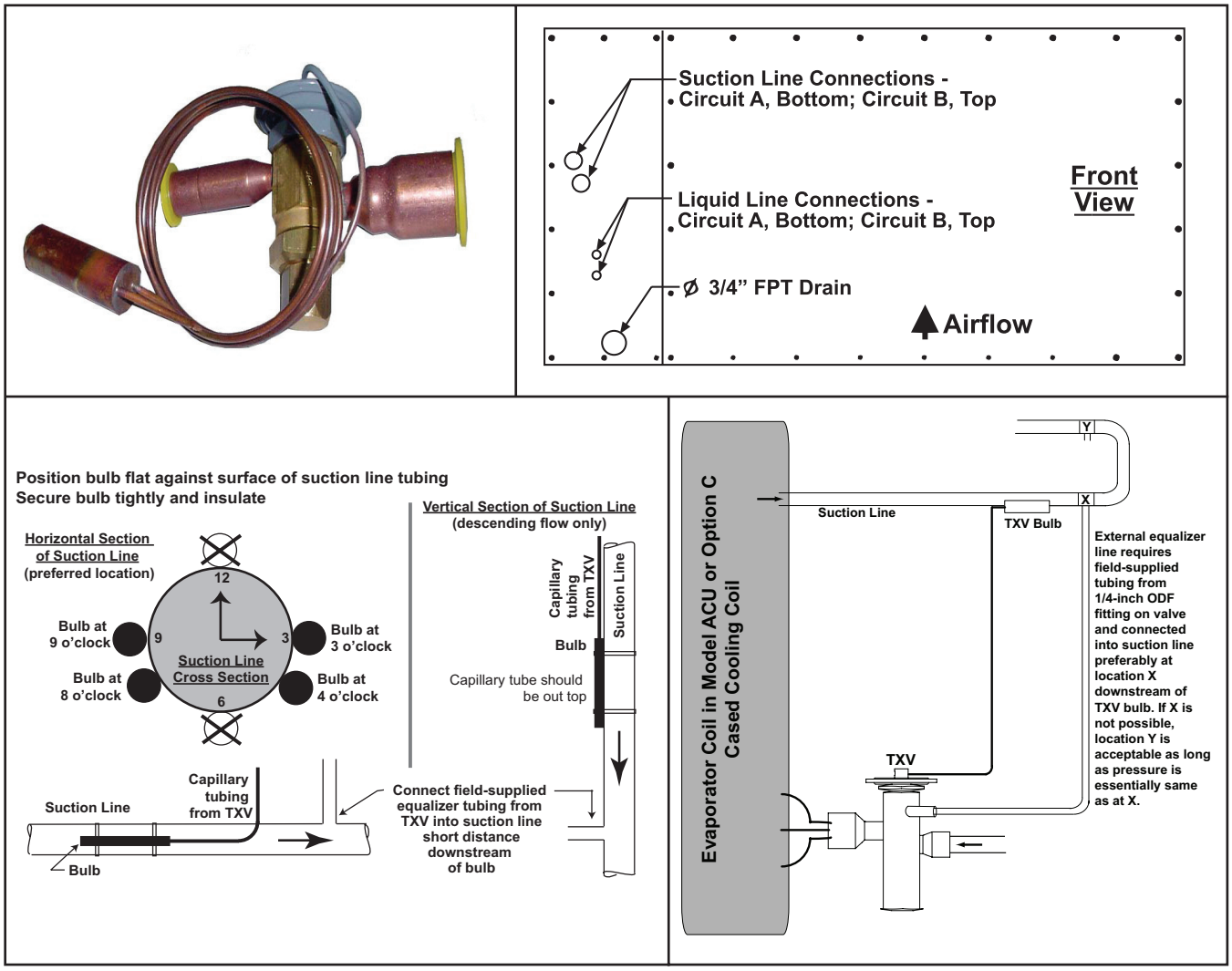

Figure 11. TXV Connections

Table 19. TXVs and Reducers

Refrigerant	ACU Model	ACU Unit Size	TXV Kit*	Circuit**	TXV MFR's No.	TXV PN	TXV Outlet (Inches)	TXV Inlet (Inches)†	Distributor Connection (Inches)††	Reducer PN
R-410A	ACUA	060	258856	A	BBIZE-5	234052	7/8	5/8	5/8	216428
			258858	A	BBIZE-2	220552	5/8	1/2	5/8	—
				B	BBIZE-3	220553	5/8	5/8	5/8	
		072	258857	A	BBIZE-6	220555	7/8	5/8	7/8	
		090	258860	A and B	BBIZE-4	220554	7/8	5/8	5/8	216428
			258861	A	BBIZE-3	220553	5/8	5/8	5/8	—
				B	BBIZE-5	234052	7/8	5/8	5/8	216428
	ACUB	090	258860	A and B	BBIZE-4	220554	7/8	5/8	5/8	216428
			258861	A	BBIZE-3	220553	5/8	5/8	5/8	—
				B	BBIZE-5	234052	7/8	5/8	5/8	216428
		120	258862	A and B	BBIZE-5	234052	7/8	5/8	5/8	216428
			258863	A	BBIZE-3	220553	5/8	5/8	5/8	—
				B	BBIZE-6	220555	7/8	5/8	7/8	
		150	258864	A and B	BBIZE-6	220555	7/8	5/8	7/8	
			258865	A	BBIZE-4	220554	7/8	5/8	5/8	216428
				B	BBIZE-8	220557	7/8	5/8	7/8	—
	ACUC	120	258862	A and B	BBIZE-5	234052	7/8	5/8	5/8	216428
			258863	A	BBIZE-3	220553	5/8	5/8	5/8	—
				B	BBIZE-6	220555	7/8	5/8	7/8	
		150	258864	A and B	BBIZE-6	220555	7/8	5/8	7/8	
			258866	A	BBIZE-4	220554	7/8	5/8	5/8	216428
				B	BBIZE-8	220557	7/8	5/8	1-1/8	216432
		180	258867	A and B	BBIZE-8	220557	7/8	5/8	1-1/8	216432
			258868	A	BBIZE-5	234052	7/8	5/8	5/8	216428
				B	BBIZE-8	220557	7/8	5/8	1-1/8	216432
R-22	ACUA	060	258869	A	BBIVE-5	179306	1/2	1/2	5/8	235131
		072	258870	A	BBIVE-6	179307	7/8	1/2	7/8	—
		090	258871	A and B	BBIVE-4	176302	1/2	1/2	5/8	235131
			258872	A	BBIVE-3	177381	1/2	1/2	5/8	235131
				B	BBIVE-5	179306	1/2	1/2	5/8	235131
	ACUB	090	258871	A and B	BBIVE-4	176302	1/2	1/2	5/8	235131
			258872	A	BBIVE-3	177381	1/2	1/2	5/8	235131
				B	BBIVE-5	179306	1/2	1/2	5/8	235131
		120	258873	A and B	BBIVE-5	179306	1/2	1/2	5/8	235131
			258874	A	BBIVE-3	177381	1/2	1/2	5/8	235131
				B	BBIVE-6	179307	7/8	1/2	7/8	—
		150	258875	A and B	BBIVE-6	179307	7/8	1/2	7/8	—
			258876	A	BBIVE-4	176302	1/2	1/2	5/8	235131
				B	BBIVE-8	194153	7/8	1/2	7/8	—
	ACUC	120	258873	A and B	BBIVE-5	179306	1/2	1/2	5/8	235131
			258874	A	BBIVE-3	177381	1/2	1/2	5/8	235131
				B	BBIVE-6	179307	7/8	1/2	7/8	—
		150	258875	A and B	BBIVE-6	179307	7/8	1/2	7/8	—
			258877	A	BBIVE-4	176302	1/2	1/2	5/8	235131
				B	BBIVE-8	194153	7/8	1/2	1-1/8	216432
		180	258878	A and B	BBIVE-8	194153	7/8	1/2	1-1/8	216432
			258879	A	BBIVE-5	179306	1/2	1/2	5/8	235131
				B	BBIVE-8	194153	7/8	1/2	1-1/8	216432

*Includes TXVs and reducers for both circuit A and B except for some smaller ACU unit sizes.

**Circuit A = bottom liquid line inlet and bottom suction connection. Circuit B = top liquid line inlet and top suction connection.

†Distributer connection is on coil.

††Tubing connection size.

Filters for Outside/Return Air Mixing Box (Options AW9, AW11, and AW40)

Table 21. Replacement Filters

Option	Type	Size (Inches)	Unit Size (MBTUh)	
			150, 200	250–400
			PN (Quantity)	
AW9	Permanent (aluminum)	2 × 16 × 16	104103 (2)	104103 (6)
		2 × 16 × 20	101620 (2)	—
AW11	Pleated disposable MERV8	2 × 16 × 16	104109 (2)	104109 (6)
		2 × 16 × 20	104110 (2)	—
AW40	Pleated disposable MERV14	2 × 16 × 16	1036522 (2)	1036522 (6)
		2 × 16 × 20	1036523 (2)	—

Discharge Plenum And Inlet Base Components (Options CD60, CD61, CD62, and AVA2)

Table 20. Discharge Plenum and Inlet Base Components

Assembly	Component	Description	PN (Quantity)*	Option
Discharge plenum	Cabinet	Inner assembly	164751	CD60, CD61, CD62
		Back with insulation	165990	CD60, CD61, CD62
		Right side with insulation	165992	CD60, CD61, CD62
		Left side with insulation	165994	CD60, CD61, CD62
		Top front	164736	CD60, CD61, CD62
		Panel with insulation	176360	CD60, CD61
			165997	CD62
		Top	176340	CD60, CD61, CD62
	Access door	With insulation	166000	CD60, CD61, CD62
	Post	Corner	176339 (2)	CD60, CD61, CD62
			176335 (2)	CD60, CD61, CD62
		Center	176338 (2)	CD60, CD61, CD62
	Screen	End	176357 (4)	CD60, CD61, CD62
		Side	176358 (2)	CD60, CD61, CD62
	Retainer	Screen	176342 (4)	CD60, CD61, CD62
			176341 (12)	CD60, CD61, CD62
			176356 (8)	CD60, CD61, CD62
	Discharge blockoff	Side, full	176366	CD61
		End, full	176367 (2)	CD61
		Side, half	176368 (4)	CD62
		End, half	176369 (2)	CD62
Inlet base	Base	End	176333 (2)	AVA2
		Side	176335 (2)	
	Leveler		176347 (4)	
	Post	Corner	176332 (4)	
		Center, side	176330 (2)	
		Center, end	176331 (2)	
	Base top rail (side)	Side	176337 (2)	
	Top rail (end)	End	176336 (2)	
	Leg	Inner	176334 (4)	
	Plate	Mounting	176344 (4)	
	Panel	Top filler	176345 (8)	
		Bottom filler	176346 (8)	
	Guard	Filter	176303 (8)	
	Receiver	Filter guard	176511 (16)	
	Filter	Disposable, 1 × 16 × 25	16447 (8)	
		Permanent, 1 × 16 × 25	101609 (8)	
		Pleated disposable, 1 × 16 × 25	104107 (8)	

*Quantity is one (1) unless otherwise indicated.

Gas Conversion Kits

Table 22. Gas Conversion Kits						
Conversion Type	Unit Size (MBTUh)					
	150	200	250	275, 300	350	400
	PN					
NG to LP	269833	269834	170815	170816	170817	170818
LP to NG	269849	269850	170810		170811	170812

Thermostats (Options CL1, CL22, CL23, CL33, CM1, and CM1B)

Table 23. Thermostats and Thermostat Accessories			
Option	Thermostat Type	Description	PN
CL1	Single-stage	24V (Honeywell #T812C1000)	255350
CL22	Two-stage	24V (M/H #TH5220D1029) (replaces PNs 93435, 93436, and 93437)	220630
CL23	Touchscreen two-stage	24V, 7-day programmable (M/H #TB8220U1003)	257338
CL33	7-day programmable two-stage	24V (M/H #T7350B1002) (replaces PN 110158)	221038
CM1	Locking thermostat cover	6-1/2 × 7-1/2 × 2-15/16 inches (165 × 191 × 75 mm)	257464
CM1B	Large locking thermostat cover	7-1/4 × 9-3/4 × 3-3/8 inches (184 × 248 × 86 mm)	257463

Disconnect Switches (CP1, CP2, CP3, CP4, CP17, CP20, CP21, CP23, CP41, CP43, CP58, CP60)

NOTE: Fusible switches listed do not include fuses.

Table 24. Disconnect Switches		
Option	Description	PN
CP1	30A, 240V, non-fusible	040267
CP2	30A, 240V, fusible	040268
CP3	30A, 600V, non-fusible	RZ050365
CP4	30A, 600V, fusible	050366
CP17	60A, 240V, fusible	RZ089932
CP20	60A, 600V, fusible	090974
CP21	60A, 240V, non-fusible	RZ161462
CP23	60A, 600V, non-fusible	RZ161464
CP41	30A, 600V, fusible	RZ208045
CP43	60A, 600V, fusible	RZ208047
CP58	30A, 600V, non-fusible	208053
CP60	60A, 600V, non-fusible	208055

Return Air Filter Cabinets (CW4–CW16)

NOTE: Complete side and rear return air filter cabinet packages are shipped unassembled for field-assembly. If a complete bottom return air filter cabinet package is ordered, the cabinet is factory-assembled before shipping. Options CW8, CW9, and CW10 are available only with a horizontal inlet. For options CW13, CW14, CW15, and CW16, return air enters through the bottom of the filter cabinet. The cabinet may be placed with the filter access doors on either the front or rear of the heater. Refer to the return air filter cabinet installation manual found at www.reznorhvac.com for kit components and installation instructions.

Table 25. Return Air Filter Cabinet Option Packages

Option	Heater Connection Configuration	Return Air Inlet	Filters	Unit Size (MBTUh)		
				150, 200	250, 275, 300	350, 400
				Option Package PN		
CW4	Side	Horizontal or vertical	Pleated	166153	166153	166156
CW5	Side	Horizontal or vertical	Permanent	166154	166154	166157
CW6	Side	Horizontal or vertical	Field-supplied	166155	166155	166158
CW7	Rear	Horizontal or vertical	Pleated	166153	166156	166156
CW8	Side or rear	Horizontal	Pleated	166159	—	—
CW9	Side or rear	Horizontal	Permanent	166160	—	—
CW10	Side or rear	Horizontal	Field-supplied	166161	—	—
CW11	Rear	Horizontal or vertical	Field-supplied	166155	166158	166158
CW12	Rear	Horizontal or vertical	Permanent	166154	166157	166157
CW13	Front or rear	Bottom	Disposable	195165	195166	195167
CW14	Front or rear	Bottom	Pleated	195154	195155	195156
CW15	Front or rear	Bottom	Permanent	195157	195158	195159
CW16	Front or rear	Bottom	Field-supplied	195160	195161	195162

Outside/Return Air Mixing Boxes (Options GA6 and GA8)

NOTE: Complete outside/return air mixing boxes are shipped assembled for field-installation. Refer to the outside/return air mixing box installation manual found at www.reznorhvac.com for installation instructions.

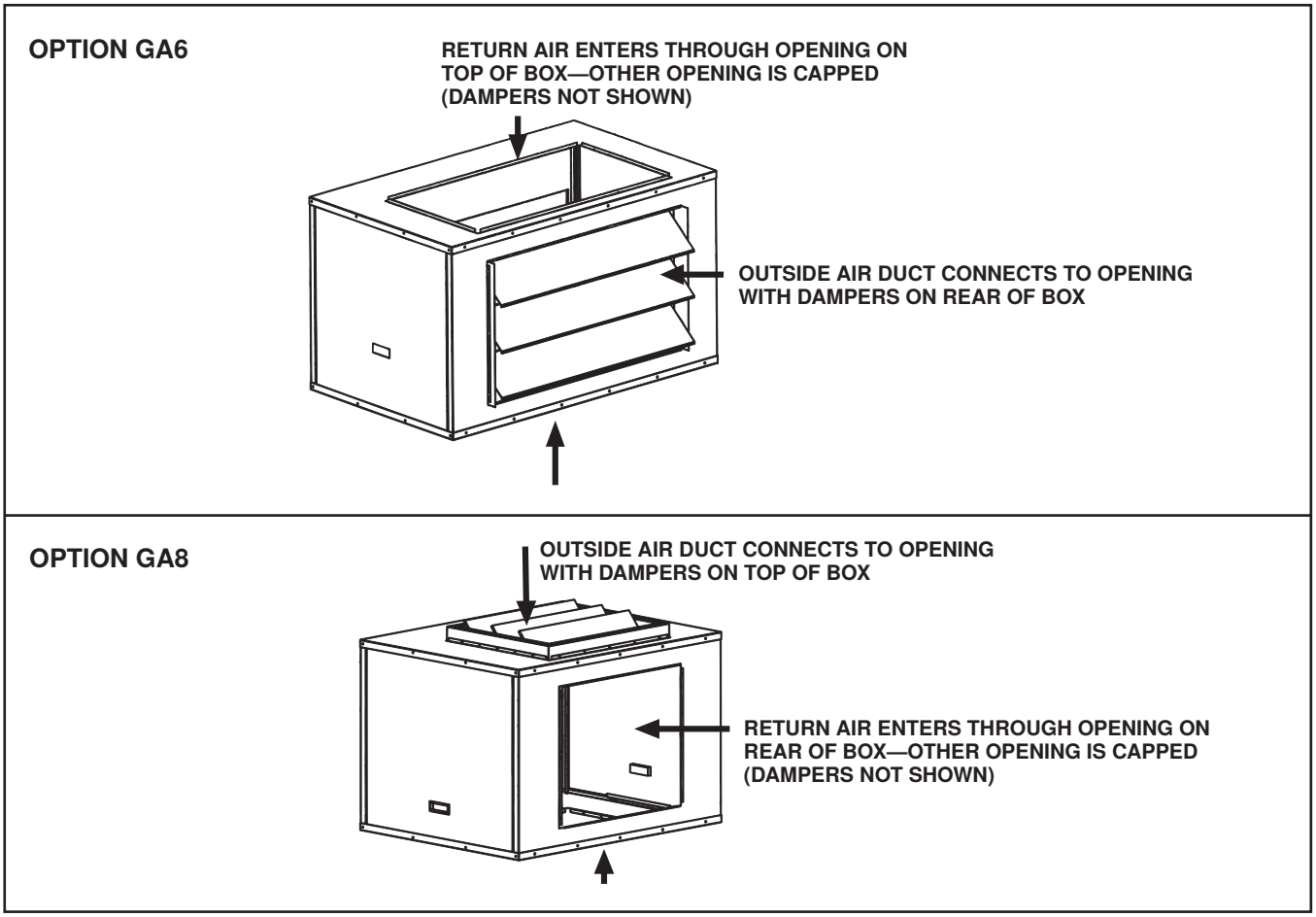

Figure 12. Typical Outside/Return Air Mixing Box Configurations (Refer to Table 26)

Table 26. Outside/Return Air Mixing Box Options

Option	Description	Unit Size (MBTUh)	
		150, 200	250, 275, 300, 350, 400
		PN (Quantity)*	
GA6	Rear outside air opening with dampers/top return air opening with dampers	171281	171282
GA8	Top outside air opening with dampers/rear return air opening with dampers	171285	171286

Outside/Return Air Mixing Boxes (Options GA6 and GA8)—Continued

Table 27. Outside/Return Air Mixing Box Cabinet Components

Component	Configuration	Unit Size (MBTUh)	
		150, 200	250, 275, 300, 350, 400
		PN	
Panel	Top/bottom, open	170192	169952
	Top/bottom, solid	171768	171767
	Top/bottom, with duct connection	170612	170616
	Top, with duct connection and damper support	170623	170625
	Top, with damper and damper support	170624	170626
	Bottom, with damper	170627	170628
	Front (end), open	169945	169943
	Front (end), solid	171766	171765
	Front (end), with damper	170613	170617
	Rear	169949	169948
Channel	Door	169942 (2)	
Door	With handle	170620 (2)	
Stop	Door	169950 (2)	
Support	Damper	173429 (2)	
Cabinet leg	Used on boxes with a solid bottom	161155 (2)	161156 (2)
Damper		015869	015870

*Quantity is one (1) unless otherwise indicated.

Table 28. Outside/Return Air Mixing Box Filter Assembly Components

Component	Description	Unit Size (MBTUh)	
		150, 200	250, 275, 300, 350, 400
		PN (Quantity)*	
Channel	Assembly	165035	165036
Support	Bracket	169947 (2)	
	Filter Assembly, Right	170195	
	Filter Assembly, Left	170196	
	Filter	160636	165018
	Filter	170190	170189
Channel	Support	160923 (2)	160924 (2)
Plate	Blockoff	196570 (2)	106332 (2)
Filters	Refer to **Table 21**		

*Quantity is one (1) unless otherwise indicated.

Item 2: Two-Position Damper Motor

Item 3: Modulating Damper Motor

Item 4: Modulating Damper Motor

Damper Linkage

Item 6:

Item 7:

Item 8:

Item 9:

Item 11: Potentiometer

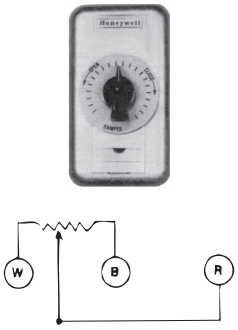

Item 12: Mixed Air Controller

Item 13: Outside Air Controller

Item 15: Logic Module

Item 16: Enthalpy Sensor

Item 17: Mixed Air Sensor

Item 18: Electronic Enthalpy Control

Figure 13. Outside/Return Air Mixing Box Damper Components (Refer to Table 29)

Outside/Return Air Mixing Boxes (Options GA6 and GA8)—Continued

Table 29. Outside/Return Air Mixing Box Damper Components

Item No.	Component	Description	Control Option	PN (Quantity)*
1	Enclosure	Electrical	GB2	171770
			GB3, GB4	
1A	Cover	Electrical enclosure	GB2	171771
			GB3, GB4	
2	Motor	Two-position (J/C #M9206-BGB-201)**	GB2	209351
3		Modulating (HW #M9185E1019)	GB3	115682
4		Modulating (M/H #M7415A-1006)	GB4	196302
5	Damper rod	1/4 × 9-1/2, option GA6	GB3, GB4	114467
		1/4 × 11, option GA6	GB2	014226
		1/4 × 19, option GA8	GB3, GB4	171773
		1/4 × 22, option GA6	GB2	026299
		1/4 × 22, option GA8	GB3, GB4	
		1/4 × 24, option GA8	GB2	171774
6	Arm	Damper (#26026)	GB2	12635 (3)
7		Crank (W/R #135-0002)	GB2	066277
8	Arm	Crank (M/H #221455A)	GB3, GB4	116209
9	Ball/socket	M/H #27518	GB2, GB3, GB4	12636 (4)
10	Plate	Adjustment, damper arm	GB2, GB3, GB4	115687
11	Potentiometer	M/H #112894FA	GC1A, GC1B	016110
12	Controller	Mixed air (M/H #T991A-1004)	GC3A	016109
13		Outdoor air (J/C #A19AAF-120)	GC4 with GB2	126170
14	Holder	Bulb	GC3B with GB4	171772
			GC4 with GB2	
15	Module	Logic (M/H #W7459A1001)	GC3B with GB4	196289
16	Sensor	Enthalpy (M/H #C7400A1004)	GC3B with GB4	196290
17		Mixed air sensor (M/H #C7150B1004)	GC3B with GB4	196291
			GC3C with GB2	
18	Control	Enthalpy, electronic (M/H #H705A1003)	GC3C with GB2	177230

*Quantity is one (1) unless otherwise indicated.

**If replacing motor PN 66376, order replacement kit PN 209423.

Specifications and illustrations subject to change without notice or incurring obligations.
Latest version of this manual is available at **www.reznorhvac.com**.
©2026 Reznor LLC, Saint Charles, MO. All rights reserved.