REZNOR®

Revision: SC-RPL (10-26) REV-C

Supersedes: SC-RPL (12-25) REV-B

REPLACEMENT PARTS FOR SEPARATED-COMBUSTION INDOOR GAS-FIRED DUCT FURNACE

MODEL SC

TABLE OF CONTENTS

SERIAL NUMBERS 2
ELECTRICAL COMPONENTS 3
VENTER AND FLUE DUCT COMPONENTS 9
HEAT EXCHANGER COMPONENTS 11
BURNER COMPONENTS 13
PILOT REPLACEMENT KITS 16
CABINET COMPONENTS 17
ACCESSORIES/OPTIONS 18

IMPORTANT

- **Always include complete model and serial number so that any specification change can be considered for parts replacement. It can save time and expense.**
- **In keeping with our policy of continuous product improvement, we reserve the right to alter any information shown here.**
- **Order by Part Number (PN) not by option designation.**

WE RESERVE THE RIGHT TO SUBSTITUTE FUNCTIONAL REPLACEMENTS.

SERIAL NUMBERS

Decode serial number as follows:

Serial No. Sample: **BOF 3060 000000**
Elements Key No.: **1 | 2 | 3**

Key:

1 = Date of manufacture (refer to **Table 1**)
2 = Plant of manufacture (3060 = Mercer; 3062 = Monterrey)
3 = Consecutive number

Table 1. Serial Number Date Codes (Month and Year)

Year	Month											
	JAN	FEB	MAR	APR	MAY	JUN	JUL	AUG	SEP	OCT	NOV	DEC
2015	BOA	BOB	BOC	BOD	BOE	BOF	BOG	BOH	BOI	BOJ	BOK	BOL
2016	BPA	BPB	BPC	BPD	BPE	BPF	BPG	BPH	BPI	BPJ	BPK	BPL
2017	BQA	BQB	BQC	BQD	BQE	BQF	BQG	BQH	BQI	BQJ	BQK	BQL
2018	BRA	BRB	BRC	BRD	BRE	BRF	BRG	BRH	BRI	BRJ	BRK	BRL
2019	BSA	BSB	BSC	BSD	BSE	BSF	BSG	BSH	BSI	BSJ	BSK	BSL
2020	BTA	BTB	BTC	BTD	BTE	BTF	BTG	BTH	BTI	BTJ	BTK	BTL
2021	BUA	BUB	BUC	BUD	BUE	BUF	BUG	BUH	BUI	BUJ	BUK	BUL
2022	BVA	BVB	BVC	BVD	BVE	BVF	BVG	BVH	BVI	BVJ	BVK	BVL
2023	BWA	BWB	BWC	BWD	BWE	BWF	BWG	BWH	BWI	BWJ	BWK	BWL
2024	BXA	BXB	BXC	BXD	BXE	BXF	BXG	BXH	BXI	BXJ	BXK	BXL
2025	BYA	BYB	BYC	BYD	BYE	BYF	BYG	BYH	BYI	BYJ	BYK	BYL
2026	BZA	BZB	BZC	BZD	BZE	BZF	BZG	BZH	BZI	BZJ	BZK	BZL
2027	CAA	CAB	CAC	CAD	CAE	CAF	CAG	CAH	CAI	CAJ	CAK	CAL
2028	CBA	CBB	CBC	CBD	CBE	CBF	CBG	CBH	CBI	CBJ	CBK	CBL
2029	CCA	CCB	CCC	CCD	CCE	CCF	CCG	CCH	CCI	CCJ	CCK	CCL
2030	CDA	CDB	CDC	CDD	CDE	CDF	CDG	CDH	CDI	CDJ	CDK	CDL

ELECTRICAL COMPONENTS

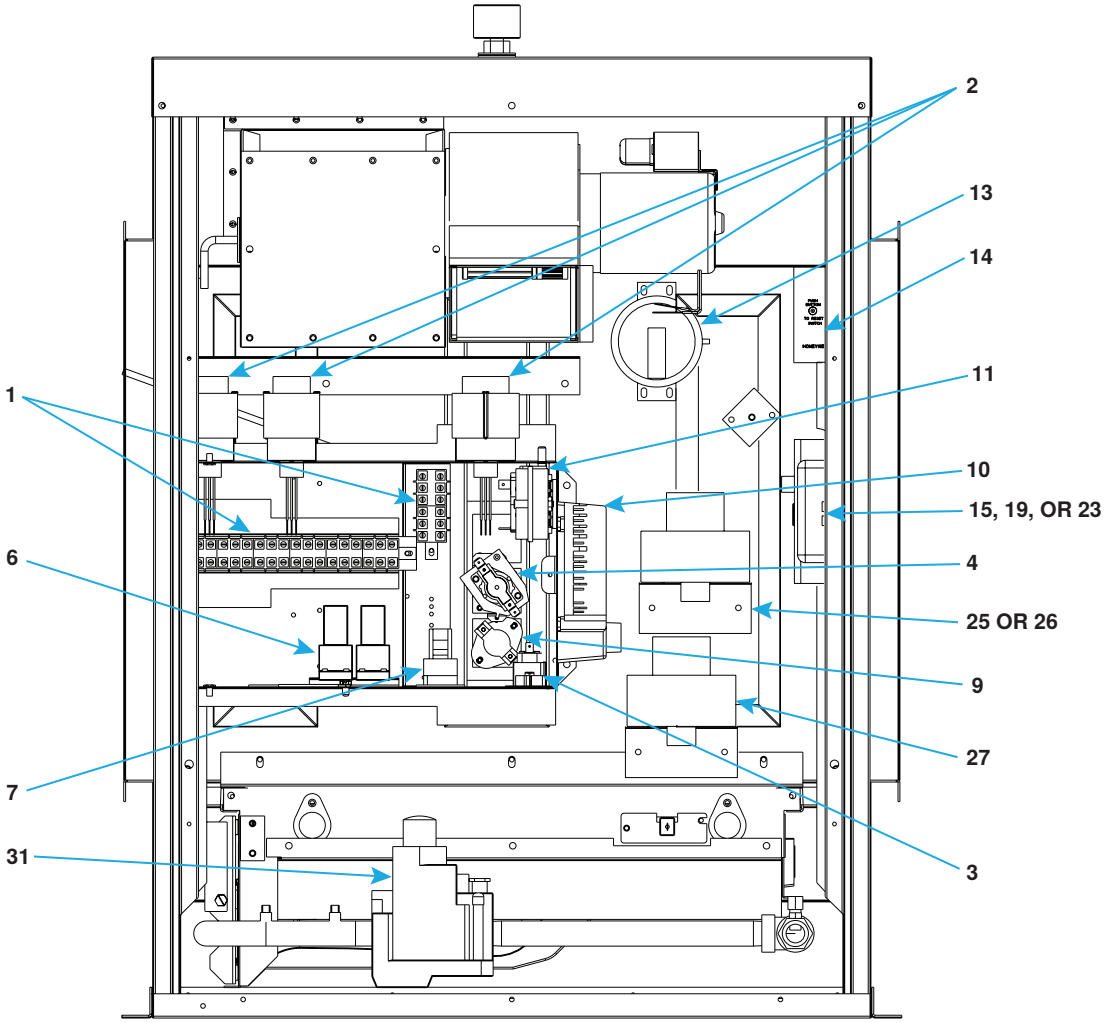

Figure 1. Electrical Components (Refer to Table 2)

Table 2. Electrical Components

Item No.	Component	Description	PN
1	Terminal block		144972
1A	Adapter	Terminal block	144973
2	Control/damper transformer	115/24/20VA	103054
		115/24/40VA	103055
		208/230/24/40VA	103497
		460/24/40VA	103498
3	Relay	Venter, time delay	259780
3A		Replacement kit for obsolete PN 46233 or 259518 (includes relay PN 259780)	259521
4		Fan/blower control, time delay, SPST	209164
5		RBM, SPDT, options BG3 and BG5	18549
6		24V, option AG8, AG9, or AG21, requires relay socket (PN 211415)	211411
7		Time delay, SPDT, 24V, option AG39 or AG40	174810
9	Limit control	Opens at 125°F, closes at 105°F	50417
9A	Shield	Limit control	9704
10	Ignition controller	Without lockout	257009
		With lockout	257010
10A	Replacement kit	Ignition controller without lockout	257472
		Ignition controller with lockout	257473

ELECTRICAL COMPONENTS—CONTINUED

Table 2. Electrical Components—Continued			
Item No.	**Component**	**Description**	**PN**
11	Combustion air pressure switch	For installations ≤4000 feet elevation, setpoint = 0.58 (±0.05) IN WC	204327
		For installations >4000 feet elevation, setpoint = 0.52 (±0.05) IN WC	204328
		For unit sizes 100–225 with option AG39 or AG40	204325
		For unit sizes 250–400 with option AG39 or AG40	204326
12	ECO	Device	131450
12A	Mounting plate	ECO device	82633
13	Switch	Blower air flow, normally-open/non-adjustable, setpoint 0.175 IN WC, option BW1	112107
14	Firestat	Manual reset opens at 200°F, options BD2 and BD3	42782
14A	Gasket	Firestat, used when firestat is used without cover	121041
14B	Shield	Firestat, discharge firestat only	120021
15	Unit-mounted ductstat, option AG3	Two-stage, 50–120°F, 10-foot capillary, units manufactured ***after*** FEB 2022, replaces PN 41700—note that terminal designations are different	211481
15A	Holder	Ductstat bulb	100260
15B	Strap	Ductstat cable	16227
16	Remote temperature selector, option AG15	WiFi-capable relay module	2000488
		Expansion module	2000489
17	Sensor holder and junction box assembly		
17A	Sensor	Ductstat	115851
17B	Holder	Ductstat	115850
18	Discharge sensor	Option AG8 or AG9	48041
		Option AG39	133228
18A	Gasket	Discharge sensor	104138
19	Signal conditioner	Option AG21 or AG40	134170
20	Fuse	8A	201773
		3A	201780
			201803
20A	Fuseholder		60241
21	Receptacle	Convenience outlet, option BC2	96912
22	Limit	Reverse flow	103323
22A	Bracket	Reverse flow limit	18795
23	Amplifier	Maxitrol	260863
		Replacement kit for obsolete PN 48035 or 48036 (includes amplifier PN 260863)	262320
		Maxitrol	260864
		Replacement kit for obsolete PN 48037 or 48038 (includes amplifier PN 260864)	262321
		Maxitrol, option AG39 or AG40	174848
24	Temperature selector	Remote, option AG9	48042
		Remote, option AG39 or AG40	174849
25	Low pressure switch	Natural gas, range 1–6 IN WC, option BP4	93849
26		Propane, automatic reset, range 6–24N WC, set at 50% of minimum inlet gas pressure, option BP4	149176
27	High pressure switch	Manual reset, set at 125% of normal manifold gas pressure, option BP4	93850
27A	Limiter	Vent	123481
27B	Bracket	Vent limiter	100261
28	Pressure switch	Gas flow, white label, 1.1 IN WC, option AG39 or AG40	174809
29	Relay	Speed-selector, two-speed motor, 24V	110656
30	Transformer	Refer to **Table 3**	
31	Electric gas valve	Combination and modulating	Refer to **Table 4**

Table 3. Transformers				
kVA	Primary			
	200/208	220/240/440/480	277	575
0.25	19807	11279	—	113556
0.50	19808	11100	14993*	—
0.75	24453*	11217	14994*	
1.00	24454*	16065	14995*	
1.50	24455*	24392*	14996*	
2.00	24456*	26628*	14997*	
3.00	24465*	26630*	14998*	
5.00	24466*	26631*	15003*	

*Special order item.

Table 4. Electric Gas Valves										
Gas Control Option*	Gas Type	Valve Type	Unit Size (MBTUh)							
			100, 125	150	175, 200	225	250	300	350	400
			PN							
AG1	NG	Combination	096307		121599			221525		
	LP		096310					221526		
AG2, AG3, AG15	NG	Combination	177396					177397		
	LP		177398							
AG7, AG8, AG9, AG21	NG	Modulating	042278	42279		42280				
		Combination	221526							
	LP	Modulating	156462	156463		156464				
		Combination	221526							
AG39, AG40	NG	Modulating	174815	174838			174840		—	174841
		Combination	096307		121599			221525		221525
AG41, AG42	NG	Refer to Table 5								

*AG41 and AG42 are available only with model SSCBL in unit sizes 500, 600, 800, and 1200. SSCBL units are comprised of model SC duct furnaces packaged with a blower unit.

Table 5. Electric Gas Valves for Natural Gas Options AG41 and AG42				
Furnace	Valve Type	Model SSCBL Unit Size (MBTUh)		
		500	600	800, 1200
		PN		
First	Modulating	174840		174841
	Combination	121599	221525	
Second	Combination	177396		177397

ELECTRICAL COMPONENTS—CONTINUED

Item 1: Terminal Block 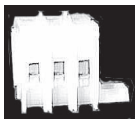 **Item 1A: Terminal Block Adapter**	**Item 2: Control/Damper Transformer**	**Item 3: Time Delay Relay**
Item 4: Time Delay Relay	**Item 5: RBM Relay**	**Item 6: Relay** 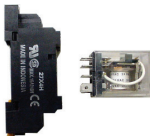
Item 7: Time Delay Relay	**Item 8: Time Delay Relay**	**Item 9: Limit Control** **Item 9A: Limit Control Shield**

Figure 2. Individual Electrical Components—Items 1 Through 9 (Refer to Table 2)

Item 10: Ignition Controller

PN 257009

PN 257010

Item 11: Combustion Air Pressure Switch

Item 12: ECO Device

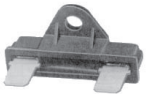

Item 13: Blower Air Flow Switch

Item 14: Firestat

Item 15: Unit-Mounted Ductstat

Item 16: Remote Temperature Selector

Item 17: Sensor Holder and Junction Box Assembly

Sensor

Holder

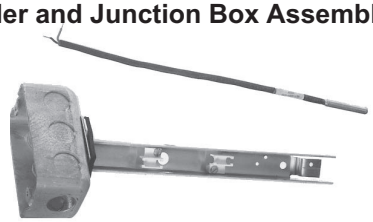

Item 18: Discharge Sensor

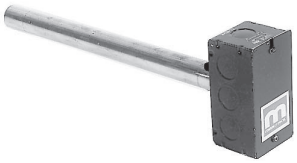

Item 19: Signal Conditioner

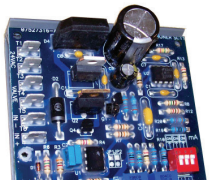

Item 20: Fuse

Item 20A: Fuse Holder

Item 21: Convenience Outlet Receptacle

Figure 3. Individual Electrical Components—Items 10 Through 21 (Refer to Table 2)

ELECTRICAL COMPONENTS—CONTINUED

Items 22 and 22A: Reverse Flow Limit and Bracket

Item 24: Remote Temperature Selector

PN 48042

PN 174849

Item 23: Amplifier

PN 260863

PN 260864

PN 174848

Item 25: Gas Pressure Switch, Low Pressure, Natural Gas

Item 26: Gas Pressure Switch, Low Pressure, Propane

Item 27: Gas Pressure Switch, High Pressure

Vent Limiter

Bracket

Item 28: Gas Flow Switch

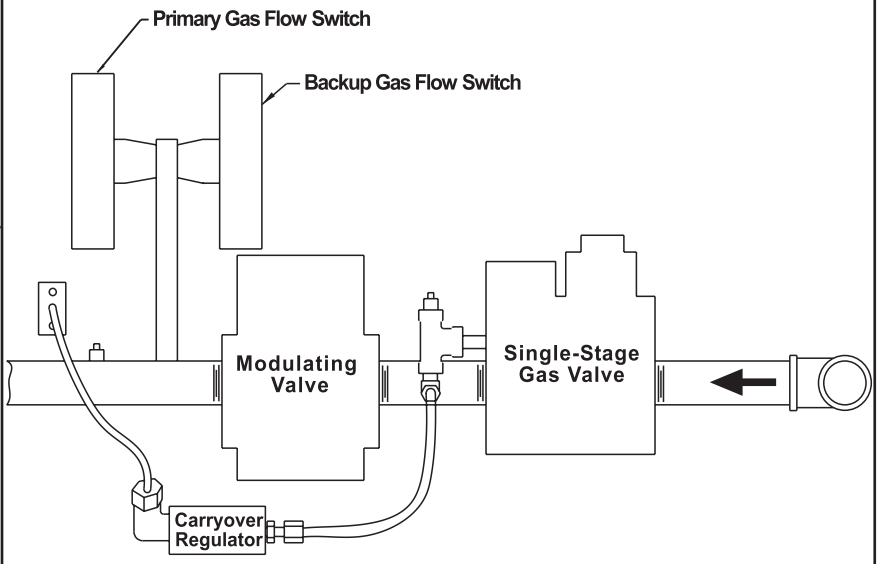

Item 29: Speed Selector Relay

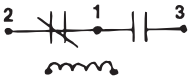

Item 30: Transformer

Figure 4. Individual Electrical Components—Items 22 Through 30 (Refer to Table 2)

VENTER AND FLUE DUCT COMPONENTS

NOTE: Some components apply to packaged duct furnace/blower air handler units (models SCE and SSCBL with certain gas control options.

Applies to all units

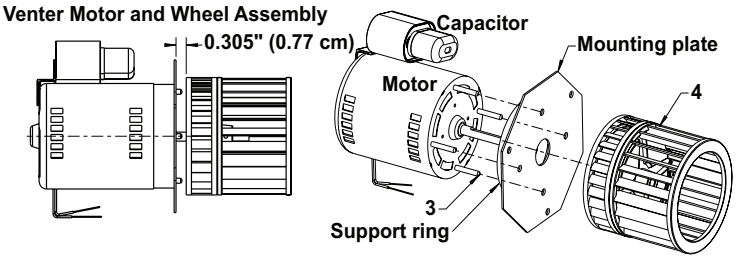

Applies to:

1) SC/SCE units *without* 20–100% electronic modulation option AG39 or AG40

2) SSCBL units *without* option AG41 or AG42

3) Second and third furnaces in SSCBL unit *with* option AG41 or AG42

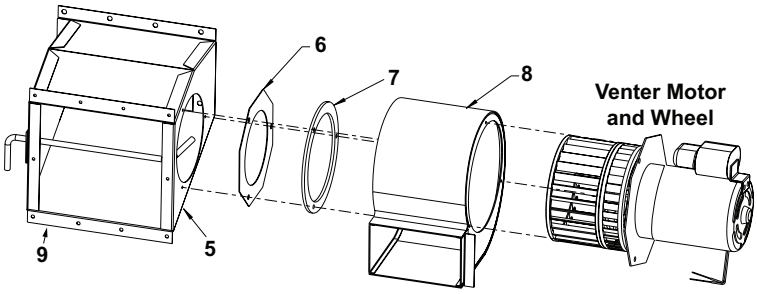

Applies to:

1) Single furnace *with* 20–100% electronic modulation option AG39 or AG40

2) First furnace in multiple-furnace units *with* option AG41 or AG42

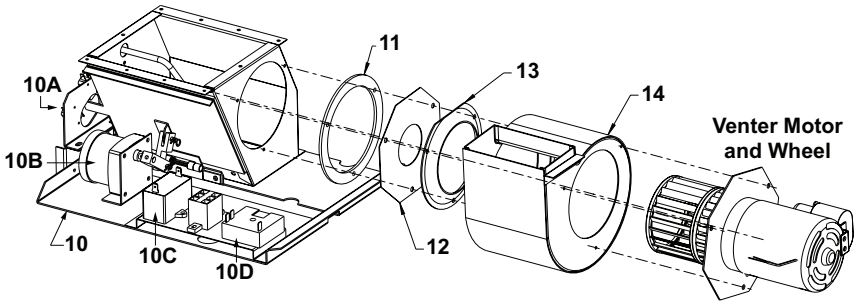

Figure 5. Ventor Motor and Wheel Assembly with Flue Duct Components (Refer to Table 6)

VENTER AND FLUE DUCT COMPONENTS—CONTINUED

Table 6. Venter and Flue Duct Components

Item No.	Component	Description	Unit Size (MBTUh)			
			100, 125, 150, 175, 200, 225, 250	300	350	400
			PN (Quantity)*			
1	Venter motor and capacitor	115V, replaces 131410	163891			
		208/230V, replaces 131415	163892			
		460V, replaces 165986	163893			
2	Venter motor mounting plate	Assembly	125344		125345	
		Plate	125347		125348	
		Support ring	125346		125346	
3	Nut	Keps	31522 (4)			
4	Wheel	Venter	43425		43814	
5	Flue duct	With sensing tube	125341			
6	Venter restrictor plate		Refer to **Table 7**			
7	Gasket	Venter	44695			
8	Housing	Venter	68380		68397	
9	Cover plate	Flue duct	41995			
9A	Gasket (not shown)		41996			
10	Restrictor and gear motor	Flue duct, option AG39 or AG40	208474		—	208475
10A	Switch	End	174812 (2)			174812 (2)
10B	Motor	Gear	206144			206144
10C	Capacitor	Gear motor	217031			217031
10D	Relay	Time delay	206146			206146
11	Gasket	Venter	44695			44695
12	Venter restrictor plate		Refer to **Table 7**			
13	Inlet ring	Venter	—	62594	—	62594
14	Housing assembly		68380			68397
15	Gear motor replacement kit	Replaces solenoid actuator	208474			208475

*Per furnace section. Quantity is one (1) unless otherwise indicated.

Table 7. Venter Restrictor Plates

Item No.	Component	Description	Unit Size (MBTUh)									
			100	125	150	175	200	225	250	300	350	400
			PN (Quantity)*									
6	Venter restrictor plate	With aluminized heat exchanger	125855	125856	125857	125858	125859	68386	68388	43259	43260	68399
		With stainless steel heat exchanger		43254		43257		43258		68392	125862	125863
12	Restrictor plate	Venter	175786	68388	68386	68390	43260	175787	43260	—		

HEAT EXCHANGER COMPONENTS

NOTE: Units have one heat exchanger per furnace section. When replacing a heat exchanger, check to see if the baffle assembly can be salvaged. If the baffle assembly cannot be salvaged, item 9 from Table 6 must be ordered separately and must be field-installed in the replacement heat exchanger. Baffle parts cannot be installed in the replacement heat exchanger at the factory. They must be ordered separately and installed in the field.

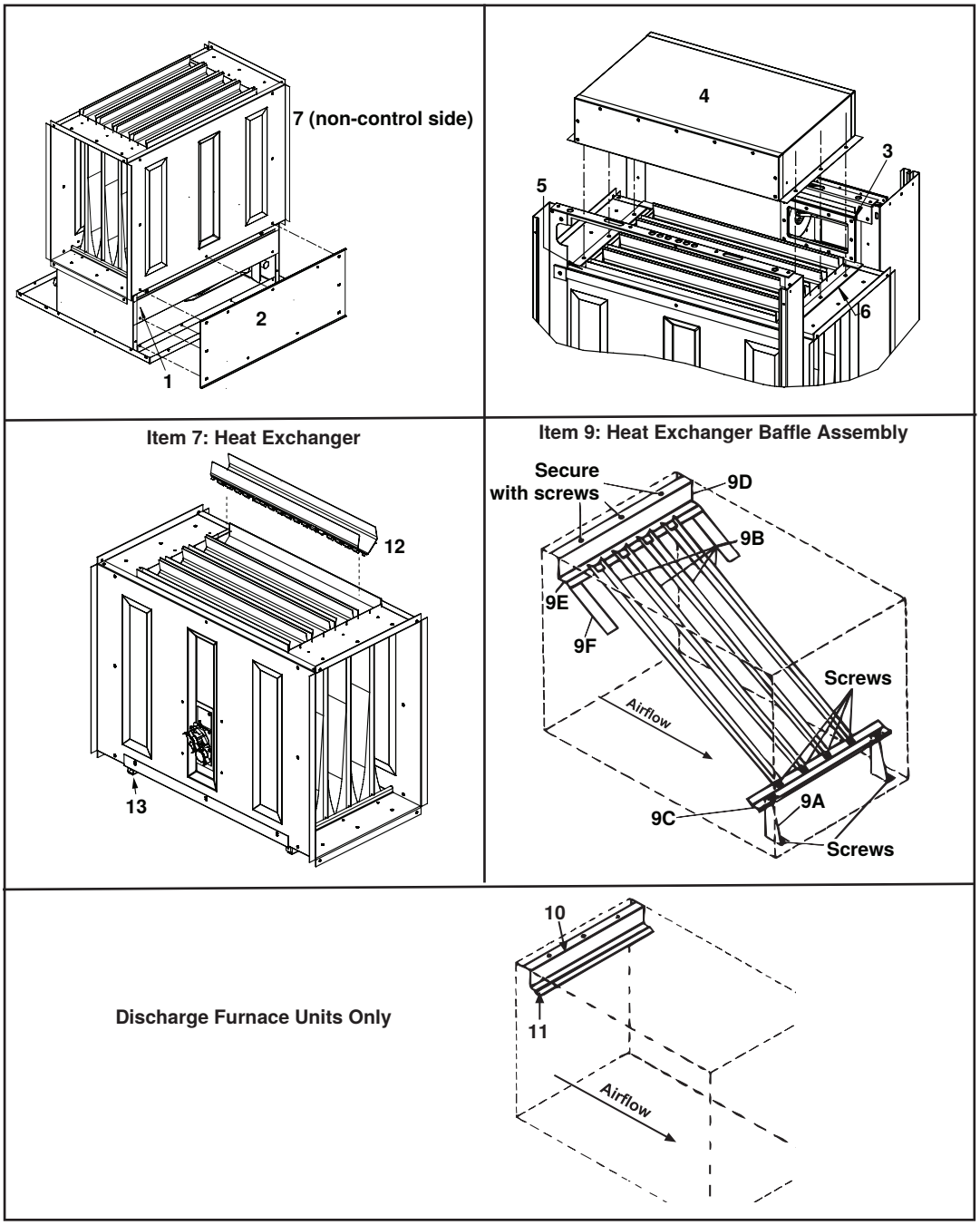

Figure 6. Heat Exchanger Components (Refer to Table 8)

HEAT EXCHANGER COMPONENTS—CONTINUED

Table 8. Heat Exchanger Components

Item No.	Component	Description	Unit Size (MBTUh)						
			100	125	150, 175	200, 225	250, 300	350	400
			PN (Quantity)*						
1	Back brace	Burner rack	9525						
2	Seal plate	Rear	38616						
3	Gasket	Outlet duct	31900 (2)						
4	Collection box	Flue, assembly	125264	125265	125266	125274	125275	125276	125469
5	Gasket	Side	62933 (2)						
6		Front	62921	62922	62924	62926	62928	62930	62932
		Rear							
7	Heat exchanger	Aluminized steel	44301	44304	44307	44310	44313	44316	44319
		Stainless steel	44302	44305	44308	44311	44314	44317	44320
8	Gasket** (not shown)	Heat exchanger	62921 (2)	62932 (2)					
			62933 (2)						
9	Baffle assembly		55094	55095	55096	55097	55098	55099	55100
9A	Support bracket	Finger baffle	55101 (2)				55101 (4)		
9B	Finger baffle		45399 (3)	45399 (4)	45399 (6)	45399 (8)	45399 (11)	45399 (13)	45399 (15)
9C	Baffle support	Bottom	46478	46484	46489	46494	46499	46504	46509
9D		Rear top	55103	55104	55106	55108	55110	55112	55114
9E	Baffle	Rear top	55116	55117	55119	55121	55123	55125	55127
9F	Finger baffle	Side	55128 (2)						
10	Baffle support	Heat exchanger, rear top	55103	55104	55106	55108	55110	55112	55114
11	Baffle		55228	55229	55231	55233	55235	55237	55239
12	Tube baffle	V-baffle with turbulators	125170 (4)	125170 (5)	125170 (7)	125170 (9)	125170 (12)	125170 (14)	125170 (16)
13	Slide rail	Burner rack	9897 (2)	9857 (2)	9819 (2)	9781 (2)	9745 (2)	9709 (2)	9517 (2)

*Per furnace section. Quantity is one (1) unless otherwise indicated.

**Required with a replacement heat exchanger.

BURNER COMPONENTS

NOTE: Units have one burner rack per furnace section.

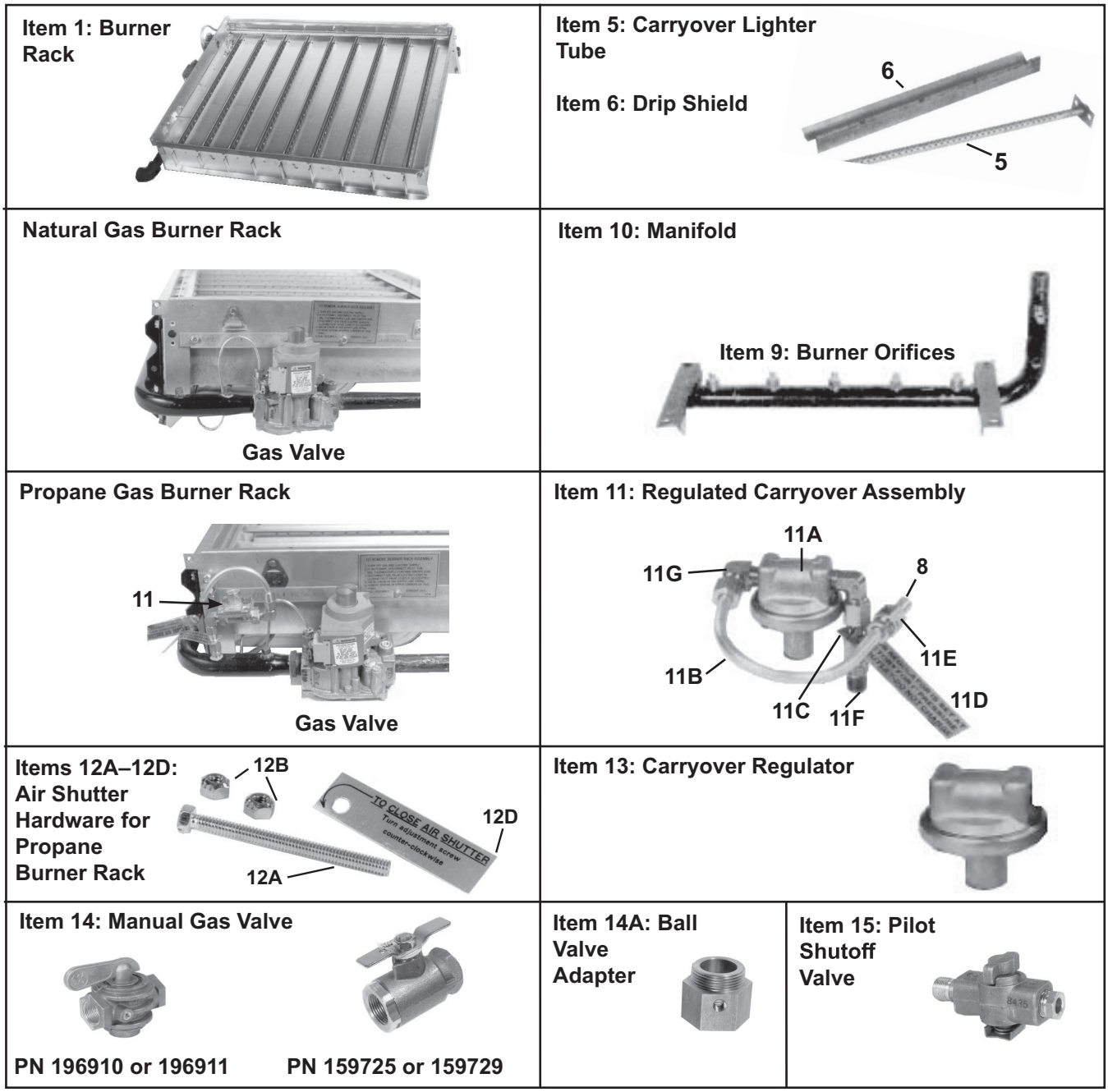

Figure 7. Burner Components (Refer to Table 9)

BURNER COMPONENTS—CONTINUED

Table 9. Burner Components

Item No.	Component	Description	Unit Size (Model SC/SCE)						
			100	125	150, 175	200, 225	250, 300	350	400
			PN (Quantity)*						
1	Burner rack	Natural gas, aluminized steel	125287	125288	125289	125290	125291	125292	125293
		Natural gas, stainless steel	131995	131996	131997	131998	131999	132000	132001
		Propane, aluminized steel	125698	73749	73751	73754	73757	73760	73762
		Propane, stainless steel	132067	132068	132069	132070	132071	132072	132073
		Natural gas, stainless steel, option AG39 or AG40						—	
2	Burner tube (not shown)	Aluminized	85218 (4)	85218 (5)	85218 (7)	85218 (9)	85218 (12)	85218 (14)	85218 (16)
		Stainless steel	87954 (4)	87954 (5)	87954 (7)	87954 (9)	87954 (12)	87954 (14)	87954 (16)
3	Flash carryover, one-piece (not shown)	Propane	63128	63131	63138	—			
		Natural gas	63128 (2)	63131 (2)	63138 (2)				
4	Flash carryover (not shown)	Right section	—			63148	63141	63148	63152
		Left section				63144			
		Center section	—				63156	68071	
5	Carryover lighter tube	Propane	9899	9859	9821	9783	9747	9711	9520
6	Drip shield	Carryover lighter tube, propane	15015	15014	15013	15012	15011	15010	14957
7	Isinglass (not shown)	Burner rack	10756 (2)						
8	Orifice	Carryover	Refer to **Table 10**						
9		Burner	Refer to **Table 11**						
10	Manifold	Less orifices	86338	86339	86340	86342	86343	86344	86345
11	Regulated carryover assembly	Propane	100712						
11A	Carryover regulator	Maxitrol RV-12, propane	11294						
11B	Carryover regulator tubing	1/4 × 5-1/2 inches long, propane	9681						
11C		1/4 × 1-1/4 inches long, propane	11892						
11D	Tag	Carryover regulator, propane	11935						
11E	Carryover regulator fitting	Compression fitting, propane	9664						
11F		Regulator to manifold, propane	1436						
11G		90-degree brass elbow, propane	18224 (2)						
12A	Adjustment screw	Air shutter, 1/4-20 × 2-1/2 inches long	10653						
12B	Nut	Air shutter adjustment screw, 1/4-20	10650						
12C	Slide tinnerman nut (not shown)	Air shutter, 1/4-20	10651						
12D	Instruction tag	Air shutter adjustment	11934						
13	Carryover regulator	Option AG39 or AG40	11294						
14	Manual gas valve, 1/2-inch	Shutoff, aluminum	196910						
	Union	1/2-inch	15971						
	Manual gas valve, 3/4-inch	Shutoff, aluminum	196911						
	Union	3/4-inch	15972						
	Manual gas valve, 1-inch	125 psig	159725						
	Manual gas valve, 1-1/4-inch		159729						
14A	Ball valve adapter	1/2-inch	120373						
		3/4-inch	120169						
		1-inch	110758						
		1-1/4-inch	110759						
15	Shutoff valve	Pilot	3284						

*Per furnace section. Quantity is one (1) unless otherwise indicated.

Table 10. Carryover Orifices

Gas Type	Unit Size (MBTUh)				
	100, 125	150, 175, 200, 225	250, 300	350	400
	PN (Drill Size)				
NG	9870 (70)	9680 (65)	10370 (59)	—	9791 (56)
LP				38274 (57)	

Table 11. Burner Orifices

Installation Location	Installation Elevation (Feet (Meters))	Gas Type	Unit Size (MBTUh)									
			100	125	150	175	200	225	250	300	350	400
			PN, Drill Size (Quantity)									
US, Canada	0–2001 (0–610)	NG	11792, #41 (4)	84437, #42 (5)	11833, #44 (7)	84437, #42 (7)	11828, #43 (9)	84437, #42 (9)	11833, #44 (12)	84437, #42 (12)	84437, #42 (14)	84437, #42 (16)
		LP	61652, 1.45 mm (4)	61652, 1.45 mm (5)	11830, #55 (7)	61652, 1.45 mm (7)	11830, #55 (9)	61652, 1.45 mm (9)	11830, #55 (12)	61652, 1.45 mm (12)	61652, 1.45 mm (14)	61652, 1.45 mm (16)
US	2001–3000 (611–915)	NG	84437, #42 (4)	84437, #42 (5)	38678, #45 (7)	84437, #42 (7)	11833, #44 (9)	84437, #42 (9)	38678, #45 (12)	84437, #42 (12)	84437, #42 (14)	84437, #42 (16)
		LP	11834, #54 (4)	11834, #54 (5)	11830, #55 (7)	11834, #54 (7)	11830, #55 (9)	11834, #54 (9)	11830, #55 (12)	11834, #54 (12)	11834, #54 (14)	11834, #54 (16)
Canada	2001–4500 (611–1373)	NG	84437, #42 (4)	11828, #43 (5)	38678, #45 (7)	11828, #43 (7)	11833, #44 (9)	11828, #43 (9)	38678, #45 (12)	11828, #43 (12)	11828, #43 (14)	11828, #43 (16)
		LP	11834, #54 (4)	11834, #54 (5)	11830, #55 (7)	11834, #54 (7)	11830, #55 (9)	11834, #54 (9)	11830, #55 (12)	11834, #54 (12)	11834, #54 (14)	11834, #54 (16)
US	3001–4000 (916–1220)	NG	84437, #42 (4)	11828, #43 (5)	38678, #45 (7)	11828, #43 (7)	11833, #44 (9)	11828, #43 (9)	38678, #45 (12)	11828, #43 (12)	11828, #43 (14)	11828, #43 (16)
		LP	11834, #54 (4)	11834, #54 (5)	11830, #55 (7)	11834, #54 (7)	11830, #55 (9)	11834, #54 (9)	11830, #55 (12)	11834, #54 (12)	11834, #54 (14)	11834, #54 (16)
	4001–5000 (1221–1525)	NG	84437, #42 (4)	11828, #43 (5)	38678, #45 (7)	11828, #43 (7)	11833, #44 (9)	11828, #43 (9)	38678, #45 (12)	11828, #43 (12)	11828, #43 (14)	11828, #43 (16)
		LP	11834, #54 (4)	11834, #54 (5)	11830, #55 (7)	11834, #54 (7)	11830, #55 (9)	11834, #54 (9)	11830, #55 (12)	11834, #54 (12)	11834, #54 (14)	11834, #54 (16)
	5001–6000 (1526–1830)	NG	11828, #43 (4)	11828, #43 (5)	16590, #46 (7)	11828, #43 (7)	38678, #45 (9)	11828, #43 (9)	16590, #46 (12)	11828, #43 (12)	11828, #43 (14)	11828, #43 (16)
		LP	97360, 1.35 mm (4)	97360, 1.35 mm (5)	39658, #56 (7)	97360, 1.35 mm (7)	39658, #56 (9)	97360, 1.35 mm (9)	39658, #56 (12)	97360, 1.35 mm (12)	97360, 1.35 mm (14)	97360, 1.35 mm (16)
	6001–7000 (1831–2135)	NG	11828, #43 (4)	11833, #44 (5)	84853, #47 (7)	11833, #44 (7)	38678, #45 (9)	11833, #44 (9)	84853, #47 (12)	11833, #44 (12)	11833, #44 (14)	11833, #44 (16)
		LP	97360, 1.35 mm (4)	97360, 1.35 mm (5)	39658, #56 (7)	97360, 1.35 mm (7)	39658, #56 (9)	97360, 1.35 mm (9)	39658, #56 (12)	97360, 1.35 mm (12)	97360, 1.35 mm (14)	97360, 1.35 mm (16)
	7001–8000 (2136–2440)	NG	11833, #44 (4)	11833, #44 (5)	84853, #47 (7)	11833, #44 (7)	16590, #46 (9)	11833, #44 (9)	84853, #47 (12)	11833, #44 (12)	11833, #44 (14)	11833, #44 (16)
		LP	11830, #55 (4)	11830, #55 (5)	39658, #56 (7)	11830, #55 (7)	39658, #56 (9)	11830, #55 (9)	39658, #56 (12)	11830, #55 (12)	11830, #55 (14)	11830, #55 (16)
	8001–9000 (2441–2745)	NG	11833, #44 (4)	38678, #45 (5)	40414, #48 (7)	38678, #45 (7)	84853, #47 (9)	38678, #45 (9)	40414, #48 (12)	38678, #45 (12)	38678, #45 (14)	38678, #45 (16)
		LP	11830, #55 (4)	11830, #55 (5)	39658, #56 (7)	11830, #55 (7)	39658, #56 (9)	11830, #55 (9)	39658, #56 (12)	11830, #55 (12)	11830, #55 (14)	11830, #55 (16)
	9001–10,000 (2746–3048)	NG	38678, #45 (4)	16590, #46 (5)	40414, #48 (7)	16590, #46 (7)	84853, #47 (9)	16590, #46 (9)	40414, #48 (12)	16590, #46 (12)	16590, #46 (14)	16590, #46 (16)
		LP	11830, #55 (4)	11830, #55 (5)	39658, #56 (7)	11830, #55 (7)	39658, #56 (9)	11830, #55 (9)	39658, #56 (12)	11830, #55 (12)	11830, #55 (14)	11830, #55 (16)

PILOT REPLACEMENT KITS

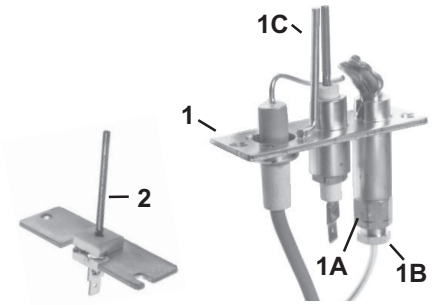

Figure 8. Vertical Spark Pilot (Refer to Table 12)

Table 12. Vertical Spark Pilot Replacement Kit Components

Item No.	Component	Description	Natural Gas	Propane
			Kit PN	
			131457	131458
			Comonent PN (Quantity)*	
1	Pilot assembly	Includes pilot orifice, pilot tubing, and flame probe	125251	125671
1A	Orifice	Pilot	103034	126024
1B	Tubing	Pilot, 1/8 OD × 18 inches long	98698	
1C	Probe	Flame	126104	
2	Auxiliary probe	Flame, with bracket	126101	
3	Lead (not shown)	Flame sensor, 18-gauge × 14-inch, 150°C	125401 (2)	
4	Fitting (not shown)	Compression	97572 (2)	

*Quantity is one (1) unless otherwise indicated.

CABINET COMPONENTS

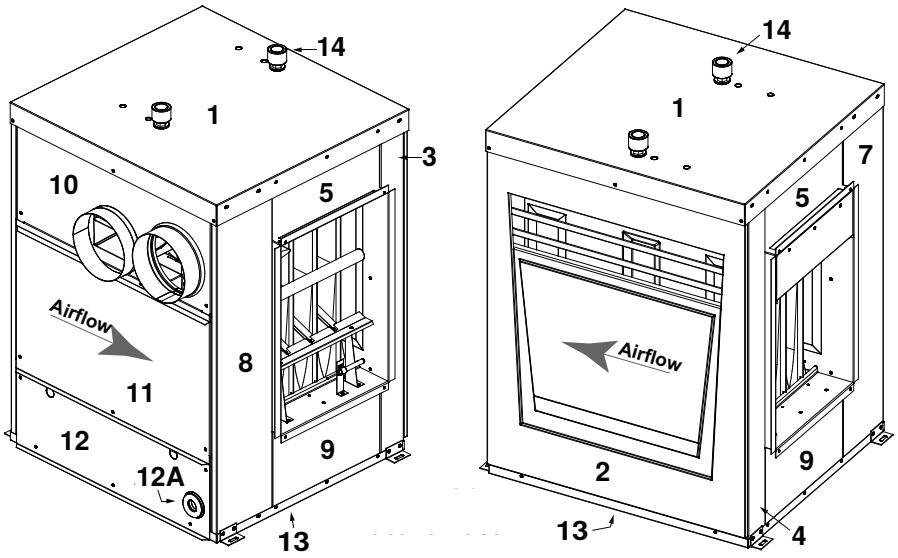

Figure 9. Cabinet Components (Refer to Table 13)

Table 13. Cabinet Components

Item No.	Component	Description	Unit Size							
			100	125	150, 175	200, 225	250	300	350	400
			PN (Quantity)*							
1	Casing top assembly	With insulation	125309	125310	125311	125312	125313		125314	125315
2	Casing side panel	Right, with insulation	80582			80585				
3	Corner leg	Right front	10309			10311				
4		Right rear	10310			10312				
5	Top	Front, with insulation	126330	64667	64669	80574	80576		80578	80580
6	Top (not shown)	Back, with insulation	126330	64667	64669	80574	80576		80578	80580
7	Control side corner leg	Left rear	126109			126110				
8		Left front	126111			126112				
9	Panel assembly	Bottom front, with insulation	67693	64662	64664	80561	80564		80567	80570
		Bottom rear, with insulation								
10		Venter	125351			130224				
11		Access (not shown)	126012							
12	Side panel**	Bottom left, with insulation	125695			—				
		Bottom left	—			125692		125693		
12A	Grommet	Vinyl	102607					15021		
13	Bottom pan assembly	Aluminized steel	125267	125268	125269	125270	125271		125272	125273
		Stainless steel	129516	129517	129518	129519	129520		129521	129522
14	Hanger	Assembly	9557 (2)							
15	Support (not shown)	Mounting	74487 (4)							
16	Frame (not shown)	Louver, with horizontal louvers	10020	10018	10016	10014	10012	10012	10010	10001
17	Louver (not shown)	Horizontal	9923 (5)	9887 (5)	9847 (5)	9808 (5)	9769 (10)		9733 (10)	9553 (10)
18		Vertical	9554 (4)		9554 (6)	9554 (8)	9554 (10)		9554 (12)	9554 (14)
19	Paint (not shown)	Touchup, maroon, 12-oz can	207432							
20	Sealant (not shown)	3M, gray	100117							

*Quantity is one (1) unless otherwise indicated.

**Includes grommet and sight hole cover.

ACCESSORIES/OPTIONS

Vent/Combustion Air Kits (Options CC2 and CC6)

NOTE: A vent/combustion air kit is required on all units (one per furnace).

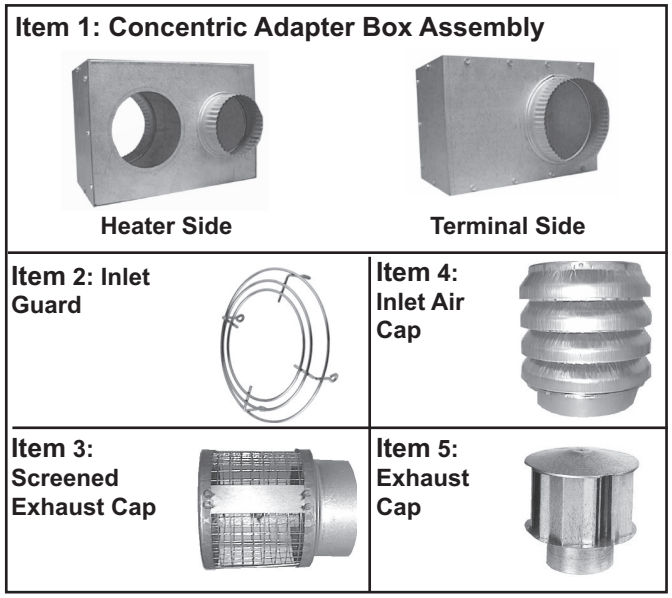

Figure 11. Vent/Combustion Air Kit Components (Refer to Table 14)

Table 14. Vent/Combustion Air Kits

Item No.	Component	Vertical Vent (Option CC2)	Horizontal Vent (Option CC6)
		Kit PN	
		205896	205883
		Component PN (Quantity)*	
1	Concentric adapter box assembly	205885	
1A	Concentric adapter box bracket (not shown)	207232 (2)	
2	Inlet guard, replaces inlet screen	—	205894
2A	Screw, #10-16 × 1/2-inch-long	37661 (4)	
3	Screened exhaust cap	—	53316
4	Inlet air cap	53330	—
5	Exhaust cap	110052	
6	Sealant, silicone, tube, high temperature, 450°F (not shown)	53335	

*Quantity is one (1) unless otherwise indicated.

Manual Shutoff Valve (Options CE1 and CE2)

Figure 10. Manual Shutoff Valve Assembly

Table 15. Shutoff Valve Components		
Component	Option CE1 (1/2-Inch)	Option CE2 (3/4-Inch)
	PN	
Shutoff valve assembly	015971	015972
Ball valve	196910	196911
Union	001224	001101

Thermostats (Options CL1, CL9, CL22, CL33, CL52, CM1, and CMB1)

Table 16. Thermostats and Thermostat Accessories			
Option	Type	Description	PN
CL1	Single-stage heating/cooling	24V, snap-acting, 50–90°F, with fan AUTO/ON and COOL/OFF/HEAT	255350
CL9	Electronic modualting	Low voltage for makeup air, room override, 60–85°F	024857
CL22	Two-stage heating/cooling	24V, digital, 40–90°F, with fan AUTO/ON	220630
CL33	Electronic two-stage heating/cooling	24V, programmable	221038
CL52	Single-stage heating/cooling	24V, programmable, 45–88°F, with fan AUTO/ON and COOL/OFF/HEAT	220632
CM1	Locking thermostat cover		257464
CMB1	Large locking thermostat cover		257463

Toggle Switches (Options CN1, CN2, CN3, and CN4)

NOTE: When replacing SPST switch with SPDT switch, make wiring connections at appropriate two terminals for switch to function properly.

Table 17. Toggle Switches		
Option	Description	PN
CN1	DPDT, three-position, in 4 × 4 box	040277
	DPDT, three-position, replaces PN 21826	101900
CN2	DPST, two-position, in 2 × 4 box	039732
	DPST, two-position, replaces PN 16816	101902
CN3	SPDT, two-position, in 2 × 4 box	039733
	DPST, two-position, replaces PN 1052	101901
CN4	SPST, two-position, in 2 × 4 box	039748

Disconnect Switches (Options CP2, CP3, CP4, CCP41, and CP58)

NOTE: Fusible switches listed do not include fuses.

Table 18. Disconnect Switches		
Option	Description	PN
CP2	30A, 240V, fusible	040268
CP3	30A, 600V, non-fusible	RZ050365
CP4	30A, 600V, fusible	050366
CP41	30A, 600V, fusible	RZ208045
CP58	30A, 600V, non-fusible	208053

Condensate Drain Kit (Option CS1)

NOTE: Terminate the condensate drain outside of the building.

Table 20. Condensate Drain Kit (PN 31765) Components		
Component	**PN**	**Quantity**
Waste nut, 3/4	10293	1
Machine screw, #10-32 × 1	46250	2
Hex nut, #10-32	26490	2
RTV sealant, 3-OZ tube	53335	1
Sheet metal screw	2444	2

Photoelectric Air Duct Smoke Detector (Option SA1)

NOTE: Order the sampling tube based on the width of the duct where it will be installed. Install the smoke detector in accordance with the manufacturer's instructions provided with the detector.

Table 19. Air Duct Smoke Detector Components		
Component	**Duct Width (Feet)**	**PN**
Smoke detector	—	159553
Sampling tube	≤1	259069
	1–2	159714
	2–4	558864
	4–8	558865

Manual Gas Valves

Table 21. Manual Gas Valves		
Component	**Description**	**PN**
Pilot valve	Shutoff	3284
Gas valve	125 PSIG, 1-inch	159725
	125 PSIG, 1-1/4-inch	159729
Ball valve adapter	1-inch	110758
	1-1/4-inch	110759
	1/2-inch	120373
	3/4-inch	120169

Specifications and illustrations subject to change without notice or incurring obligations.
Latest version of this manual is available at **www.reznorhvac.com**.
©2026 Reznor LLC, Saint Charles, MO. All rights reserved.