REZNOR®

Revision: UD-APD-IOM (05-26) 195673-A

Supersedes: I-UD&APD (04-19) PN195673R33

GAS-FIRED UNIT HEATER INSTALLATION, OPERATION, AND MAINTENANCE

DISCONTINUED MODELS APD AND UDAP (STANDARD POWER VENT FAN TYPE), UDBP (STANDARD POWER VENT BLOWER TYPE), UDAS (SEPARATED-COMBUSTION FAN TYPE), AND UDBS (SEPARATED-COMBUSTION BLOWER TYPE)

⚠ DANGER ⚠

FIRE OR EXPLOSION HAZARD

- **Failure to follow safety warnings exactly could result in serious injury, death, or property damage.**
- **Improper installation, adjustment, alteration, service, or maintenance can cause serious injury, death, or property damage.**
- **Installation and service must be performed by a qualified installer, service agency, or the gas supplier.**
- **Be sure to read and understand the installation, operation, and service instructions in this manual.**
- **Do not store or use gasoline or other flammable vapors and liquids in the vicinity of this or any other appliance.**

WHAT TO DO IF YOU SMELL GAS

- **Do not try to light any appliance.**
- **Do not touch any electrical switch; do not use any phone in your building.**
- **Leave the building immediately.**
- **Immediately call your gas supplier from a phone remote from the building. Follow the gas supplier's instructions.**
- **If you cannot reach your gas supplier, call the fire department.**

DO NOT DESTROY. PLEASE READ CAREFULLY. KEEP IN A SAFE PLACE FOR FUTURE REFERENCE.

TABLE OF CONTENTS

GENERAL INFORMATION . . . 4
Important Safety Information . . . 4
Certification . . . 5
Warranty . . . 5
Installation Codes . . . 5
Special installations (aircraft hangars/repair garages/parking garages) . . . 5
Massachusetts requirement . . . 5
UNIT HEATER LOCATION . . . 6
Heater Throw . . . 6
Mounting Height Requirements . . . 7
Hazards of Chlorine . . . 8
Clearances and Dimensions . . . 8
Weights . . . 10
Combustion Air Requirements . . . 11
Combustion air—models UDAS and UDBS . . . 11
Combustion air—models APD, UDAP, and UDBP . . . 11
Acoustical Considerations . . . 12
UNCRATING, INSPECTING, AND PREPARATION FOR INSTALLATION . . . 12
Uncrating . . . 12
Inspecting . . . 12
Preparation for Installation . . . 12
Shipped-separate options . . . 12
Field-removal of heat exchanger tube support—unit sizes 030–125 (optional) . . . 12
HEATER INSTALLATION . . . 12
Two- or Four-Point Suspension . . . 12
Option Packages . . . 12
Downturn nozzle kits (option CD2, CD3, or CD4) . . . 13
Hanger kits (option CK8, CK10, or CK22) . . . 13
Lifting and Suspension of Heater . . . 14
Heater Suspension Using Field-Supplied Threaded Rods . . . 14
PIPING INSTALLATION . . . 15
Gas Supply Pressure . . . 15
Sizing Gas Supply Line . . . 15
Gas Connections . . . 16
WIRING INSTALLATION . . . 16
Supply Wiring . . . 17
Supply wiring connections . . . 17
Supply wiring connections at circuit board . . . 17
Control Wiring . . . 17
Wiring Diagrams . . . 18

TABLE OF CONTENTS—CONTINUED

OPERATION . . . 20
Component Descriptions . . . 20
Pressure (combustion air proving) switch . . . 20
High temperature limit control . . . 21
Flame rollout switch (unit sizes 030–125) . . . 21
Interlock door switch (models UDAS and UDBS) . . . 22
Gas valve . . . 22
Fan motor . . . 22
Venter motor . . . 22
Thermostat . . . 22
Multiple heater control (options CL31 and CL32) . . . 22
DDC controls—unit sizes 150–400 (options D10 and D14) . . . 22
Circuit board (DSI integrated control module) . . . 23
Operating Sequence . . . 24
Abnormal Heat Cycle Functions . . . 25
Fault Modes . . . 26
Startup . . . 27
Pre-startup checklist . . . 27
Startup sequence . . . 27
Post-startup checklist . . . 29
Adjustments . . . 29
Manifold pressure adjustment . . . 30
High-altitude deration . . . 31
Pressure switch replacement . . . 34
MAINTENANCE AND SERVICE . . . 35
Maintenance Schedule . . . 35
Maintenance Procedures . . . 35
Heat exchanger maintenance . . . 35
Burner maintenance . . . 36
Burner orifice maintenance . . . 37
Ignition system maintenance . . . 38
Maintenance of fan motor, fan blades, and guard . . . 38
Maintenance of venter motor and wheel assembly . . . 39
Operating gas valve maintenance . . . 40
Pressure (combustion air) switch maintenance . . . 41
Limit control maintenance . . . 41
Flame rollout switch maintenance (unit sizes 030–125 only) . . . 41
Door switch maintenance (models UDAS and UDBS only) . . . 42
Transformer maintenance . . . 42
Disconnect switch (models UDAS and UDBS only) . . . 42
Vent or vent/combustion air system maintenance . . . 42
TROUBLESHOOTING . . . 42
Unit Troubleshooting Using DSI Control Module . . . 42
General Troubleshooting . . . 44
APPENDIX: TECHNICAL DATA . . . 46

GENERAL INFORMATION

This unit heater has been tested for capacity and efficiency so as to provide many years of safe and dependable comfort providing it is properly installed and maintained. With regular maintenance, this unit will operate satisfactorily year after year. Abuse, improper use, and/or improper maintenance can shorten the life of the appliance and create unsafe hazards.

To achieve optimum performance and minimize equipment failure, it is recommended that periodic maintenance be performed on this unit. The ability to properly perform maintenance on this equipment requires certain tools and mechanical skills.

This manual applies only to the models listed. Accessories referenced may not apply to all models.

Installation should be done by a qualified agency in accordance with these instructions. The qualified service agency installing this heater is responsible for the installation.

NOTE: Both this installation/operation manual and the appropriate venting instructions are shipped with the heater. Verify that the literature is correct for the heater being installed. If either manual is missing or incorrect, contact your distributor before beginning installation.

Important Safety Information

Please read all information in this manual thoroughly and become familiar with the capabilities and use of your appliance before attempting to operate or maintain this unit. Pay attention to all dangers, warnings, cautions, and notes highlighted in this manual. Safety markings should not be ignored and are used frequently throughout to designate a degree or level of seriousness.

DANGER: A danger statement describes a potentially hazardous situation that if not avoided, will result in severe personal injury or death and/or property damage.

WARNING: A warning statement describes a potentially hazardous situation that if not avoided, can result in severe personal injury and/or property damage.

CAUTION: A caution statement describes a potentially hazardous situation that if not avoided, can result in minor or moderate personal injury and/or property damage.

NOTE: A note provides important information that should not be ignored.

⚠ WARNING ⚠

- **Installation and service must be performed by a qualified installer, service agency, or the gas supplier.**
- **Gas-fired appliances are not designed for use in hazardous atmospheres containing flammable vapors or combustible dust, in atmospheres containing chlorinated or halogenated hydrocarbons, or in applications with airborne silicone substances.**
- **Should overheating occur, or the gas supply control system fail to shut off the flow of gas, shut off the manual gas valve to the utility heater before shutting off the electrical supply.**
- **Do not use this appliance if any part has been under water. Immediately call a qualified service technician to inspect the appliance and replace any gas control that has been under water.**

⚠ CAUTION ⚠

Unit heaters should not be installed in an environment where the ambient temperature is below 50°F. The low space temperature may result in condensate forming in the heat exchanger.

Certification

Unit sizes 030, 045, 060, 075, 100, and 125 are design-certified by the Canadian Standards Association for use in residential, industrial, and commercial installations. Utility heaters certified for *residential use* are intended for the heating of non-living spaces that are attached to or part of a structure that contains space for family living quarters. They are not intended to be the primary source of heat in residential applications or to be used in sleeping quarters.

Unit sizes 150, 175, 200, 225, 250, 300, 350, and 400 are design-certified by the Canadian Standards Association for use in industrial and commercial installations only.

All models and unit sizes are available for use with either natural or propane gas. The type of gas, the gas input rate, and the electrical supply requirement are shown on the heater rating plate. Check the rating plate to verify that the heater is appropriate for the installation site.

Warranty

Refer to the limited warranty information on the Warranty Card in the literature bag.

Warranty is void if . . .

a. Wiring is not in accordance with the diagram furnished with the heater.

b. The unit is installed without proper clearance to combustible materials.

c. A fan model is connected to a duct system or if the air delivery system is modified.

Installation Codes

These units must be installed in accordance with local building codes. In the absence of local codes, in the United States, the unit must be installed in accordance with the National Fuel Gas Code, ANSI Z223.1. A Canadian installation must be in accordance with the CSA B149 Installation Codes. These codes are available from CSA Information Services, 1-800-463-6727. Local authorities having jurisdiction should be consulted before installation is made to verify local codes and installation procedure requirements.

Special installations (aircraft hangars/repair garages/parking garages)

Installations in aircraft hangars should be in accordance with ANSI/NFPA No. 409 (latest edition), Standard for Aircraft Hangars. Installations in public garages should be in accordance with ANSI/NFPA No. 88A (latest edition), Standard for Parking Structures. Installations in repair garages should be in accordance with ANSI/NFPA No. 88B (latest edition), Standard for Repair Garages. In Canada, installations in aircraft hangars should be in accordance with the requirements of the enforcing authorities, and in public garages, in accordance with CSA B149 codes.

Massachusetts requirement

If the heater is being installed in the Commonwealth of Massachusetts, installation must be performed by a licensed plumber or licensed gas fitter.

UNIT HEATER LOCATION

⚠ CAUTION ⚠

Unit heaters should not be used in an application where the heated space temperature is below 50°F. Operating under low ambient conditions may cause condensation to form in the heat exchanger.

Refer to the venting instructions provided for venting requirements and to the following sections of this manual to determine where to suspend the heater:

- **Heater Throw**
- **Mounting Height Requirements**
- **Hazards of Chlorine**
- **Clearances and Dimensions**
- **Weights**
- **Combustion Air Requirements**
- **Acoustical Considerations**

Heater Throw

Figure 1 shows throw patterns for fan model units. **Table 1** and **Table 2** list throw distances for standard, adjustable horizontal louvers on heaters suspended at varying mounting heights. The louver angles listed are relative to the top of the heater. The throw pattern changes with the addition of optional vertical louvers and/or downturn nozzles.

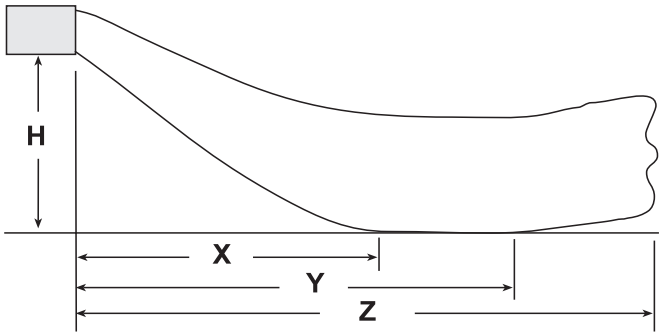

H = Distance from bottom of heater to the floor
X = Distance from heater to start of floor coverage
Y = Distance to end of floor coverage
Z = Distance at which air velocity drops below 50 feet (15.2 meters) per minute

Figure 1. Heater Throw Patterns (Refer to Table 1 and Table 2)

Table 1. Heater Throw Distances with Standard Horizontal Louvers at Mounting Heights of 5 to 18 Feet

Distance*				Louver Angle	Distance*			Louver Angle	Distance*			Louver Angle	Distance*			Louver Angle	Distance*			Louver Angle	Distance*			Louver Angle	Distance*			Louver Angle
H	X	Y	Z		X	Y	Z		X	Y	Z		X	Y	Z		X	Y	Z		X	Y	Z		X	Y	Z	
Unit Size	**030**				**045**				**060**				**075**				**100**				**125**				**150**			
5	6	14	30	−21°	7	16	40	−20°	8	18	45	−16°	9	20	57	−14°	9	20	59	−18°	10	22	65	−14°	—			
8	7	13	26	−39°	9	16	37	−34°	10		42	−29°	12	22	54	−25°	11	21	56	−28°	12	23	63	−24°	13	24	73	−26°
10	6	11	22	−52°		15	33	−43°		17	39	−37°			52	−32°	12	20	52	−36°	13	24	60	−30°	14		69	−32°
12	—				8	12	27	−55°		16	34	−46°		21	48	−39°	11	19	47	−44°	14	23	57	−36°			64	−39°
14	—								9	14	29	−56°		19	44	−46°		17	42	−51°		22	53	−43°		22	59	−45°
16	—												11	17	38	−54°	10	14	34	−58°	13	20	47	−50°	13	20	53	−51°
18	—																				11	17	40	−57°	11	17	44	−58°
Unit Size	**175**				**200**				**225**				**250**				**300**				**350**				**400**			
8	15	28	90	−22°	16	30	93	−20°	14		86	−24°	16	29	93	−21°	15		94	−24°	17	31	105	−20°	18	34	113	−17°
10	17	29	87	−27°	17	31	91	−25°	15	27	82	−30°	17		90	−26°	16	28	89	−29°	18		103	−25°	20	35	110	−21°
12			84	−32°	18		88	−30°			78	−35°	18	30	87	−31°			85	−34°	19	32	98	−30°	21	36	108	−25°
14	18	28	79	−37°		30	84	−34°	16	26	73	−41°			83	−36°	17	27	80	−40°	20		95	−34°			105	−29°
16		27	74	−42°	19	29	79	−39°		24	67	−47°	19	28	78	−41°		25	74	−45°	21	31	90	−38°	23	35	101	−33°
18	17	26	68	−48°		28	74	−44°	14	22	60	−53°	18	27	72	−46°	16	24	66	−51°	20	30	85	−43°			97	−37°

*Distance in feet (see **Figure 1**).

Table 2. Heater Throw Distances with Standard Horizontal Louvers at Mounting Heights of 1.5 to 5.5 Meters

Distance*				Louver Angle	Distance*			Louver Angle	Distance*			Louver Angle	Distance*			Louver Angle	Distance*			Louver Angle	Distance*			Louver Angle
H	X	Y	Z		X	Y	Z		X	Y	Z		X	Y	Z		X	Y	Z		X	Y	Z	
Unit Size	**030**				**045**				**060**				**075**				**100**				**125**			
1.5	1.8	4.3	9.1	−21°	2.1	4.9	12.2	−20°	2.4	5.5	13.8	−16°	2.7	6.1	17.4	−14°	2.7	6.1	18.0	−18°	3.0	6.7	19.9	−14°
2.4	2.1	4.0	7.9	−39°	2.7	4.9	11.3	−34°	3.0		12.8	−29°	3.7	6.7	16.5	−25°	3.4	6.4	17.1	−28°	3.7	7.0	19.2	−24°
3.0	1.8	3.4	6.7	−52°		4.6	10.0	−43°		5.2	11.9	−37°			15.8	−32°	3.7	6.1	15.8	−36°	4.0	7.3	18.3	−30°
3.7	—				2.4	3.7	8.2	−55°		4.9	10.4	−46°		6.4	14.6	−39°	3.4	5.8	14.3	−44°	4.3	7.0	17.4	−36°
4.3	—								2.7	4.3	8.8	−56°		5.8	13.4	−46°		5.2	12.8	−51°		6.7	16.1	−43°
4.9	—												3.4	5.2	11.6	−54°	3.0	4.3	10.4	−58°	4.0	6.1	14.3	−50°
5.5	—																				3.4	5.2	12.2	−57°
Unit Size	**150**				**175**				**200**				**225**				**250**				**300**			
2.4	4.0	7.3	22.3	−26°	4.6	8.5	27.4	−22°	4.9	9.1	28.0	−20°	4.3		26.2	−24°	4.9	8.8	28.3	−21°	4.6		28.7	−24°
3.0		7.3	21.0	−32°	5.2	8.8	26.6	−27°	5.2	9.4	27.7	−25°	4.6	8.2	25.0	−30°	5.2		27.4	−26°	4.9	8.5	27.1	−29°
3.7	4.3	7.3	19.5	−39°			25.6	−32°	5.5		26.8	−30°			23.8	−35°	5.5	9.1	26.5	−31°			25.9	−34°
4.3		6.7	18.0	−45°	5.5	8.5	24.1	−37°		9.1	25.6	−34°	4.9	7.9	22.3	−41°			25.3	−36°	5.2	8.2	24.4	−40°
4.9	4.0	6.1	16.2	−51°		8.2	22.6	−42°	5.8	8.8	24.1	−39°		7.3	20.4	−47°	5.8	8.5	23.8	−41°		7.6	22.6	−45°
5.5	3.4	5.2	13.4	−58°	5.2	7.9	20.7	−48°		8.5	22.6	−44°	4.3	6.7	18.3	−53°	5.5	8.2	21.9	−46°	4.9	7.3	20.1	−51°

Distance*				Louver Angle	Distance*			Louver Angle
H	X	Y	Z		X	Y	Z	
Unit Size	**350**				**400**			
2.4	5.2	9.4	32.0	−20°	5.5	11.3	34.4	−17°
3.0	5.5	9.8	31.4	−25°	6.1	10.7	33.5	−21°
3.7	5.8		29.9	−30°	6.4	11.0	32.9	−25°
4.3	6.1		29.0	−34°	7.0	10.7	32.0	−29°
4.9	6.4	9.4	27.4	−38°			30.8	−33°
5.5	6.1	9.1	25.9	−43°			26.9	−37°

*Distance in meters (see **Figure 1**).

Mounting Height Requirements

⚠ WARNING ⚠

If touched, the vent pipe and internal heater surfaces that are accessible from outside the heater will cause burns. Suspend the heater a minimum of 5 feet (1.5 meters) above the floor.

⚠ CAUTION ⚠

Do not locate the heater where it may be exposed to water spray, rain, or dripping water.

- For best results, the heater should be mounted with certain rules in mind. In general, a unit should be located 8–12 feet (2.4–3.7 meters) above the floor. Units should always be arranged to blow toward or along exposed wall surfaces, if possible. Where two or more units are installed in the same room, a general scheme of air circulation should be maintained for best results.
- Suspended heaters are most effective when located as close to the working zone as possible, and this fact should be kept in mind when determining the mounting heights to be used. However, care should be exercised to avoid directing the discharged air directly on the room occupants.
- Partitions, columns, counters, or other obstructions should be taken into consideration when locating the unit heater so that a minimum quantity of airflow will be deflected by such obstacles.
- When units are located in the center of the space to be heated, the air should be discharged toward the exposed walls. In large areas, units should be located to discharge air along exposed walls with extra units provided to discharge air in toward the center of the area.
- At those points where infiltration of cold air is excessive, such as at entrance doors and shipping doors, it is desirable to locate the unit so that it will discharge directly toward the source of cold air from a distance of 15 to 20 feet (4.6–6.1M).
- For a location where dirt, dust, or other airborne contaminants are present in the indoor environment, a separated-combustion unit that uses outside air for combustion is recommended. Using a separated-combustion unit reduces the buildup of contaminants on the burner. Any buildup on the burner adversely affects the combustion process.

Hazards of Chlorine

The presence of chlorine vapors in the combustion air of gas-fired heating equipment presents a potential corrosion hazard for separated-combustion heaters with regard to the combustion air inlet. Chlorine is usually found in the form of freon or degreaser vapors. When chlorine is exposed to flame, it will precipitate from the compound and go into solution with any condensation that is present in the heat exchanger or associated parts. The result is hydrochloric acid, which readily attacks all metals including 300 grade stainless steel. Care should be taken to separate these vapors from the combustion process. This may be done by wise location of the unit vent and combustion air terminals with regard to exhausters or prevailing wind directions. Chlorine is heavier than air. Keep these facts in mind when determining installation location of the heater in relation to building exhaust systems.

Clearances and Dimensions

Units must be installed so that the clearances listed in **Table 3** are provided for with regards to combustion air space, inspection, and service and for proper spacing from combustible construction. Clearance to combustibles is defined as the minimum distance from the heater to a surface or object for which it is necessary to ensure that a surface temperature of 90°F (50°C) above the surrounding ambient temperature is not exceeded. Refer to the dimensions listed in **Table 4** and **Table 5** and shown in **Figure 2** and **Figure 3** when determining clearances to combustibles.

Table 3. Clearances to Combustibles

Heater Surface	Unit Size	
	030–125	150–400
	Minimum Clearance (Inches (mm))	
Top	1 (25)	4 (102)
Flue connector	6 (152)	
Access panel	18 (457)	
Non-access side	1 (25)	2 (51)
Bottom*	1 (25)	
Rear**	18 (457)	

*Suspend the heater so that the bottom is a minimum of 5 feet (1.5 meters) above the floor.

**Measure rear clearance from the fan motor.

Table 4. Dimensions—Models APD, UDAP, and UDBP

Unit Size	Dimension (See Figure 2)														
	A	B	C	D	E	F	G	H	J	K	M	N	P	Q	R
	Inches (±1/16) (mm (±2))														
030, 045	12-1/8 (308)	26-5/8 (676)	10 (254)	13-13/16 (351)	26 (660)	21-9/16 (548)	5-3/16 (132)	6-1/2 (165)	2-11/16 (68)	3-7/8 (98)	17-3/8 (441)	11/16 (17)	4-5/16 (110)	13 (330)	9-9/16 (243)
060	15-1/8 (384)		13 (330)		27 (686)		7-7/8 (200)		5-1/2 (140)						10-1/2 (267)
075					27-5/8 (702)										
100	23-1/8 (587)		21 (533)		28-5/8 (727)		14-1/2 (368)		8-3/4 (222)						
125					29-3/8 (746)										
150, 175, 200	20-1/8 (511)	38-3/16 (970)	16 (406)	23 (584)	42 (1067)	35-3/8 (899)	8-1/2 (216)	8-1/4 (210)	5-7/16 (138)	6-1/2 (165)	25-11/16 (652)	1-3/8 (35)	8-3/16 (208)	22-3/16 (564)	16-3/8 (416)
225, 250	26-1/8 (664)	38-3/16 (970)	22 (559)				13-1/16 (332)	8-13/16 (224)	9 (229)						15-5/8 (397)
300, 350, 400	34-1/8 (867)	41 (1041)	30 (762)				17-1/16 (433)	9 (229)	11-13/16 (300)	7-5/16 (186)	27-11/16 (703)				16-3/16 (411)

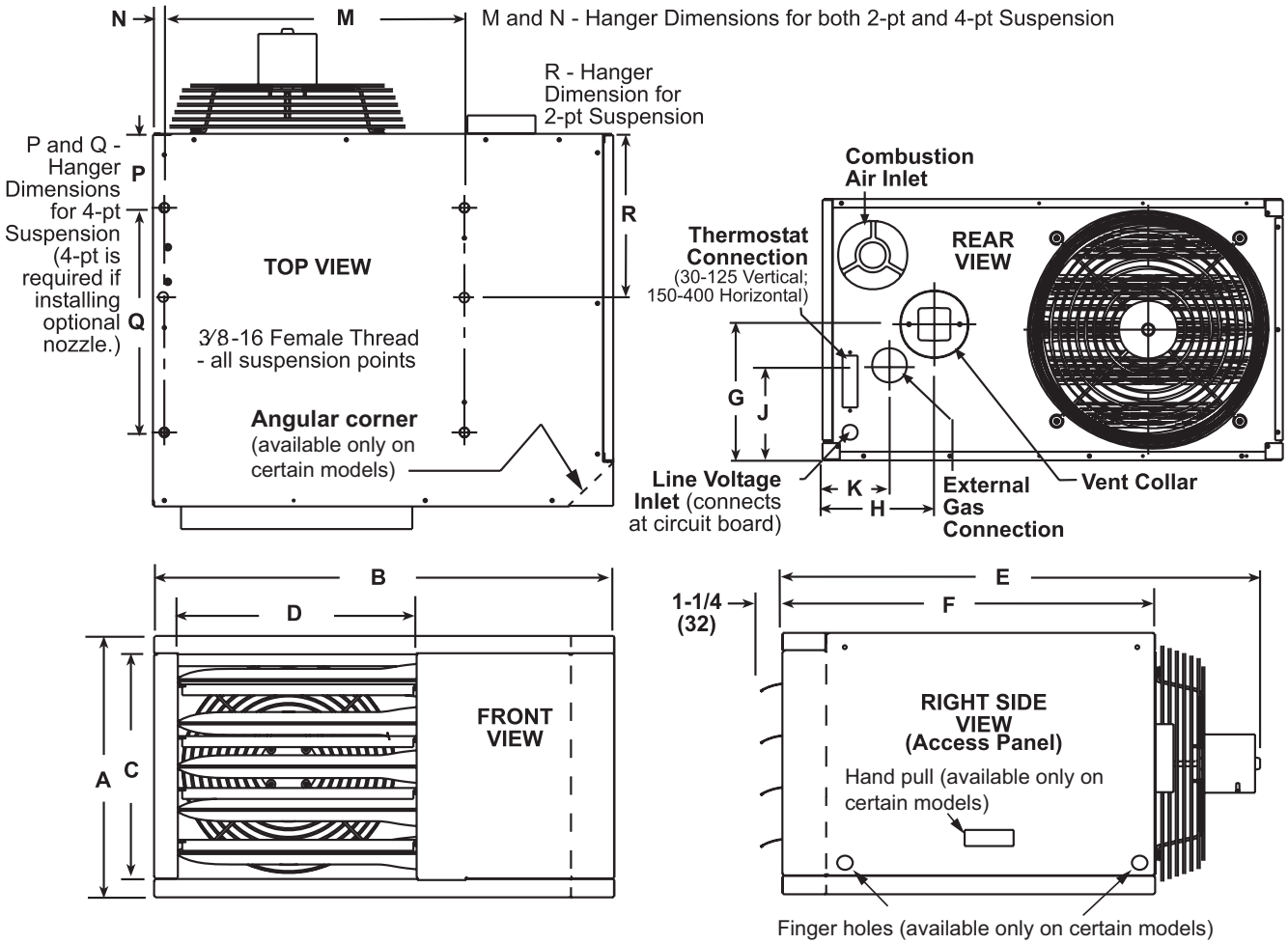

Figure 2. Dimensions—Models APD, UDAP, and UDBP (Refer to Table 4)

Table 5. Dimensions—Models UDAS and UDBS

Unit Size	Dimension (See Figure 3)																
	A	B	C	D	E	F	G	H	J	K	M	N	P	Q	R	S	T
	Inches (±1/16) (mm (±2))																
030, 045	12-1/8 (308)	26-5/8 (676)	10 (254)	13-13/16 (351)	26 (660)	21-9/16 (548)	5-3/16 (132)	6-1/2 (165)	2-11/16 (68)	3-7/8 (98)	17-3/8 (441)	11/16 (17)	4-5/16 (110)	13 (330)	9-9/16 (243)	2-15/16 (75)	2-15/16 (75)
060	15-1/8 (384)		13 (330)		27 (686)		7-7/8 (200)		5-1/2 (140)						10-1/2 (267)	3-1/4 (89)	
075					27-5/8 (702)												
100	23-1/8 (587)		21 (533)		28-5/8 (727)		14-1/2 (368)		8-3/4 (222)							4-5/8 (117)	
125					29-3/8 (746)												
150, 175, 200	20-1/8 (511)	38-3/16 (970)	16 (406)	23 (584)	42 (1067)	35-3/8 (899)	8-1/2 (216)	8-1/4 (210)	5-7/16 (138)	6-1/2 (165)	25-11/16 (652)	1-3/8 (35)	8-3/16 (208)	22-3/16 (564)	16-3/8 (416)	4-1/8 (105)	8-5/16 (211)
225, 250	26-1/8 (664)		22 (559)				13-1/16 (332)	8-13/16 (224)	9 (229)						15-5/8 (397)	5-9/16 (141)	
300, 350, 400	34-1/8 (867)	41 (1041)	30 (762)				17-1/16 (433)	9 (229)	11-13/16 (300)	7-5/16 (186)	27-11/16 (703)				16-3/16 (411)	9-1/16 (230)	8-9/16 (217)

Clearances and Dimensions—Continued

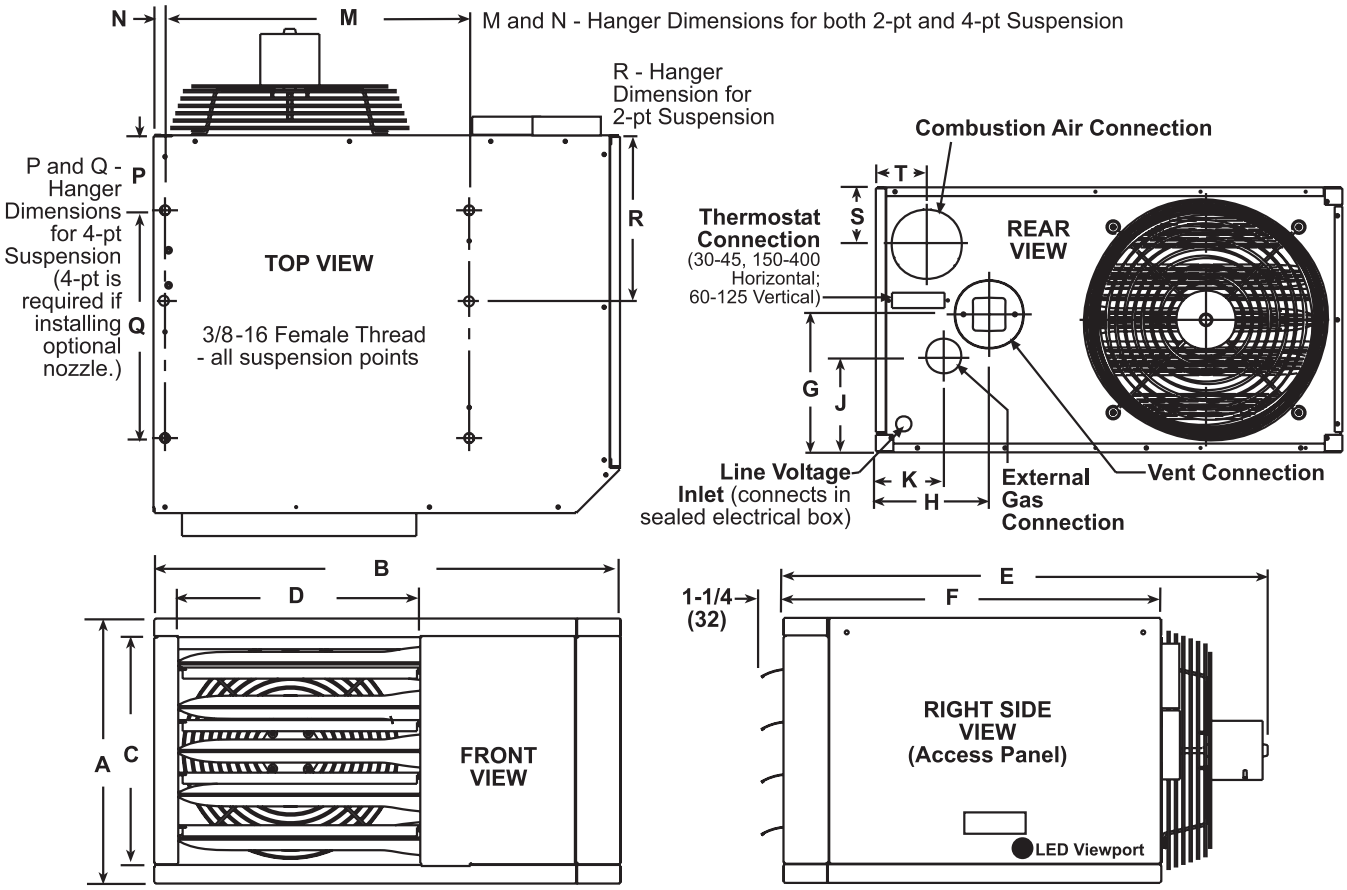

Figure 3. Dimensions—Models UDAS and UDBS (Refer to Table 5)

Weights

⚠ WARNING ⚠

Check the supporting structure to be used to verify that it has sufficient load carrying capacity to support the weight of the unit. Suspend the heater only from the threaded nut retainers or with a manufacturer-provided kit. Do NOT suspend from the heater cabinet.

Before suspending the heater, ensure that the supporting structure to be used has sufficient load-carrying capacity to support the weight (refer to **Table 6**) of the unit.

Table 6. Unit Weights

Model	Unit Size													
	030	045	060	075	100	125	150	175	200	225	250	300	350	400
	Pounds (kg)													
APD, UDAP, UDBP	54 (24)	59 (27)	67 (30)	72 (33)	96 (44)	101 (46)	172 (78)	187 (85)		203 (92)	215 (98)	269 (122)	294 (133)	306 (139)
UDAS, UDBS	55 (25)	60 (27)	68 (31)	73 (33)	97 (44)	102 (46)	173 (78)	188 (85)		204 (93)	216 (98)	270 (122)	295 (134)	307 (138)

Combustion Air Requirements

Combustion air—models UDAS and UDBS

Refer to the combustion air requirements in the venting instructions for models UDAS and UDBS.

Combustion air—models APD, UDAP, and UDBP

⚠ WARNING ⚠

Unit heater models APD, UDAP, and UDBP are designed to take combustion air from the space in which the unit is installed and are not designed for connection to outside combustion air intake ducts. Connecting outside air ducts voids the warranty and could cause hazardous operation.

Unit heater models APD, UDAP, and UDBP must be supplied with the air that enters into the combustion process and is then vented to the outdoors. Sufficient air must enter the equipment location to replace that which is exhausted through the heater vent system. In the past, the infiltration of outside air assumed in heat loss calculations (one air change per hour) was assumed to be sufficient. However, current construction methods, which use more insulation, vapor barriers, tighter fitting and gasketed doors and windows, weather-stripping, and/or mechanical exhaust fans, may now require the introduction of outside air through wall openings or ducts.

The requirements for combustion and ventilation air depend on whether the unit is located in a confined or an unconfined space.

- A *confined space* is defined as a space whose volume is less than 50 cubic feet per 1,000 BTUh of the installed appliance input rating.
- An *unconfined space* is defined as a space whose volume is not less than 50 cubic feet per 1,000 BTUh of the installed appliance input rating.
- Under ALL conditions, enough air must be provided to ensure that there will not be a negative pressure condition within the equipment room or space.

⚠ WARNING ⚠

Do not install a unit in a confined space without providing wall openings leading to and from the space.

For confined space installation of unit heater models APD, UDAP, and UDBP (including those with CV option), provide openings (depending on the combustion air source) near the floor and ceiling for ventilation and air for combustion, as shown in **Figure 4**.

Add the total BTUh of all appliances in the confined space and calculate the size of each top and bottom opening as follows (note that (1), (2), and (3) refer to **Figure 4**):

(1) Air from inside the building: calculate opening size as 1 square inch free area per 1,000 BTUh (never less than 100 square inches of free area for each opening).

(2) Air from outside through the duct: calculate opening size as 1 square inch free area per 2,000 BTUh.

(3) Air direct from outside: calculate opening size as 1 square inch free area per 4,000 BTUh.

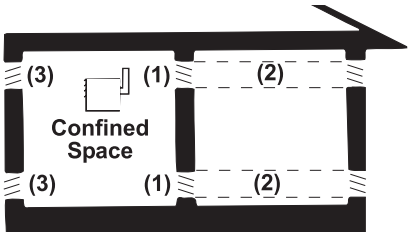

Figure 4. Required Openings for Combustion Air

NOTE: For further details on supplying combustion air to a confined space, refer to the National Fuel Gas Code ANSI Z223.1a (latest edition).

UNIT HEATER LOCATION—CONTINUED

Acoustical Considerations

Refer to sound level data in the **APPENDIX: Technical Data** when determining unit location based on acoustical considerations.

UNCRATING, INSPECTING, AND PREPARATION FOR INSTALLATION

Uncrating

It is important to note when uncrating the unit that shipping brackets are attached with cabinet screws. When removing shipping brackets, re-insert ALL screws into the cabinet.

Inspecting

The unit was test-operated and inspected at the factory prior to crating and was in operating condition. If the heater has incurred any damage in shipment, document the damage with the transporting agency and contact an authorized Distributor. If you are an authorized Distributor, follow the FOB freight policy procedures.

Check the rating plate for the gas specifications and electrical characteristics of the heater to ensure that they are compatible with the gas and electric supplies at the installation site.

Preparation for Installation

Read this booklet and become familiar with the installation requirements of your particular heater. If you do not have knowledge of local requirements, check with the local gas company or any other local agencies who might have requirements concerning this installation. Before beginning, make preparations for necessary supplies, tools, and manpower.

Shipped-separate options

Ensure that all options ordered are at the installation site. Shipped-separate items could include a vent cap (heater model APD, UDAP, or UDBP with option CC1), a vent/combustion air kit (heater model UDAS or UDBS with option CC2 or CC6), a manual gas valve, a thermostat bracket kit, a thermostat, and/or a thermostat guard.

Field-removal of heat exchanger tube support—unit sizes 030–125 (optional)

In some cases, the heat exchanger tubes may have shifted during shipment, causing vibration noise against the support during unit operation. The primary function of the heat exchanger tube support is to support the heat exchanger tubes during shipment. This support can be removed without affecting the operation of the unit. It is recommended that the support be removed prior to installing the unit as follows:

1. Remove discharge air louvers, taking care not to lose springs.
2. Remove and discard two screws that secure heat exchanger support located on top of unit.
3. Remove heat exchanger support through discharge opening and discard support.
4. Reinstall discharge air louvers.

HEATER INSTALLATION

Two- or Four-Point Suspension

The heater is designed to be suspended using either two- or four-point suspension. A 3/8-16 threaded nut retainer is located at each suspension point. The heater may be suspended using either 3/8-inch threaded rods or a hanger kit option package.

Option Packages

On heater models APD, UDAP, and UDBP, shipped-separate option packages that should be installed before the heater is suspended include vertical louvers, high-altitude kit, multiple heater control, sensor for DDC control, and/or stepdown transformer. Installation instructions for these option packages are included in the option package. Other shipped-separate option packages for these models are downturn nozzle and hanger kits for which installation instructions are included in the following paragraphs.

Downturn nozzle kits (option CD2, CD3, or CD4)

Application-specific downturn nozzle kits require four-point suspension. Follow the instructions provided with the kit to install. The additional length of the nozzle beyond the front of the unit is shown in **Figure 5** and listed in **Table 7**.

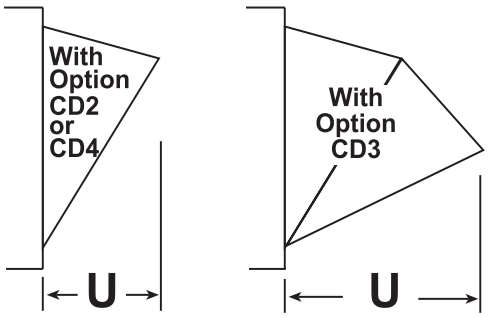

Figure 5. Downturn Nozzle Length (Refer to Table 7)

Table 7. Downturn Nozzle Length

Unit Size	Option		
	CD2	CD3	CD4
	Dimension U (Inches (mm))*		
030, 045	7-1/8 (181)	12-3/8 (314)	7-1/8 (181)
060, 075	8-5/8 (219)	15 (381)	8-5/8 (219)
100, 125	12-5/8 (321)	21-7/8 (556)	12-5/8 (321)
150, 175, 200	11-1/2 (292)	19-7/8 (505)	11-1/2 (292)
225, 250	14-1/2 (368)	25-1/8 (638)	14-1/2 (368)
300, 350, 400	18-1/2 (470)	32 (813)	18-1/2 (470)

*See **Figure 5**.

Hanger kits (option CK8, CK10, or CK22)

Options CK8 (two-point suspension) and CK10 (four-point suspension) are for suspending the heater using swivel connectors connected to 1-inch pipe. Attach the swivel connectors at the 3/8-16 threaded nut retainers. Ensure that the swivel connectors are locked to the heater as shown in **Figure 6**.

Option CK22, is available for unit sizes 030–125. This option allows the heater to be installed one inch from the ceiling without hanger rods as shown in **Figure 7**. Refer to the installation instructions provided with the kit.

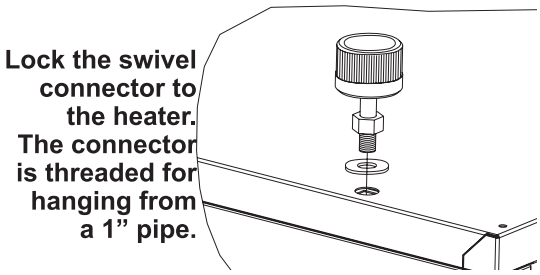

Figure 6. Option CK8 or CK10 Hanger Kit

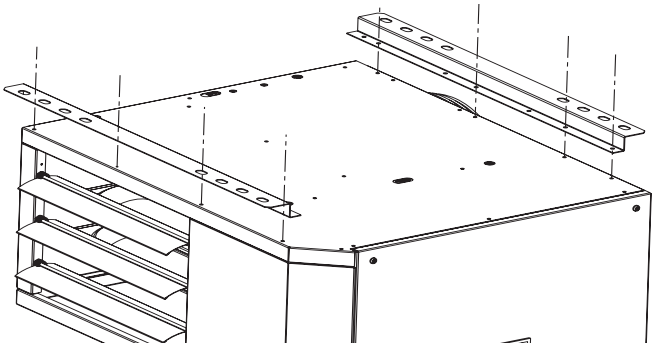

Figure 7. Option CK22 Hanger Kit

Lifting and Suspension of Heater

⚠ CAUTION ⚠

- **Before lifting the heater, verify that any screws used for holding shipping brackets were re-installed in the cabinet.**
- **Before lifting heater model UDAS or UDBS, any unused suspension points on the control side of the heater MUST be plugged.**

In the literature bag shipped with the heater, there are three capscrews (PN 203311) and sealing washers (PN 61658). On models UDAS and UDBS, these capscrews and washers must be used to seal any unused holes in the top of the heater (control side) after attaching the hanging hardware (see **Figure 8**).

⚠ WARNING ⚠

The unit heater must be level for proper operation. Do not place/add additional weight on/to the suspended heater.

⚠ CAUTION ⚠

When the heater is lifted for suspension, support the bottom of the heater with plywood or other appropriately placed material. If the bottom is not supported, damage could occur.

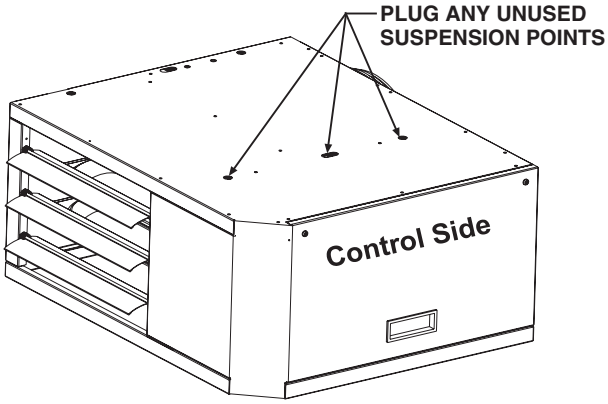

Figure 8. Plugging Unused Suspension Points—Model UDAS or UDBS

Heater Suspension Using Field-Supplied Threaded Rods

The heater may be suspended from 3/8-inch threaded rods using either two- or four-point suspension. The recommended maximum rod length is 6 feet (1.8 meters). The length of the threaded rod extending into the heater MUST NOT exceed 1/2-inch (13 mm). Ensure that the threaded rods are locked to the heater as shown in **Figure 9**.

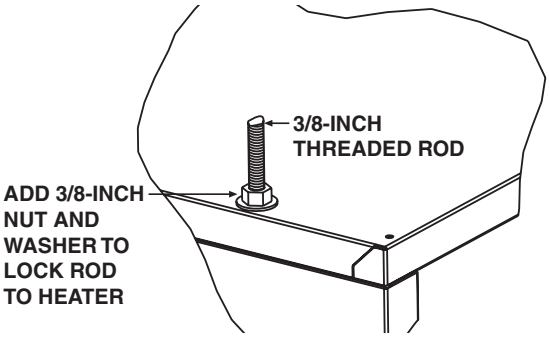

Figure 9. Heater Suspension Using Field-Supplied Threaded Rods

PIPING INSTALLATION

Gas Supply Pressure

⚠ WARNING ⚠

This appliance is equipped for a maximum gas supply pressure of 1/2 psi, 3.5 kPa, or 14 IN WC. A supply pressure greater than 1/2 psi requires the installation of an additional lockup-type service regulator external to the unit.

Pressure test the gas supply piping before connecting the heater. If the supply pressure is greater than 1/2 psi, install a lockup-type service regulator external to the unit.

If the gas supply pressure is to be tested at any point after the heater has been connected to gas piping, proceed as follows:

- For gas supply pressures below 1/2 psi, close the manual valve on the heater before testing.
- For gas supply pressures above 1/2 psi, disconnect the heater and manual valve from the gas supply line which is to be tested. Cap or plug the supply line.

Sizing Gas Supply Line

All piping must be in accordance with requirements outlined in the National Fuel Gas Code ANSI/Z223.1a (latest edition) or CSA-B149.1 and B149.2 (refer to **Installation Codes** section). Gas supply piping installation should conform to good practices and with local codes. Support gas piping with pipe hangers, metal strapping, or other suitable material. Do not rely on the heater to support the gas pipe.

NOTE: When sizing supply lines, consider the possibility of future expansion and increased requirements. Refer to National Fuel Gas Code for additional information on line sizing.

The heater is orificed for operation with natural gas having a heating value of 1,000 (±50) BTU per cubic foot or propane gas with a heating value of 2,500 (±100) BTU per cubic foot. Sizing of gas supply lines depends on piping capacity and is based on the following:

- Cubic feet per hour based on a 0.3 IN WC pressure drop
- Specific gravity for natural gas: 0.6 (1000 BTU per cubic feet)
- Specific gravity for propane: 1.6 (2550 BTU per cubic feet)
- If gas at installation does not meet these specifications, consult factory for proper orificing

Variables for sizing gas supply lines are listed in **Table 8**.

Table 8. Gas Supply Line Sizes

Length of Pipe (Feet)	Diameter of Pipe (Inches)											
	1/2		3/4		1		1-1/4		1-1/2		2	
	Natural Gas	Propane	Natural Gas	Propane	Natural Gas	Propane	Natural Gas	Propane	Natural Gas	Propane	Natural Gas	Propane
	Cubic Feet per Hour											
20	92	56	190	116	350	214	730	445	1100	671	2100	1281
30	73	45	152	93	285	174	590	360	890	543	1650	1007
40	63	38	130	79	245	149	500	305	760	464	1450	885
50	56	34	115	70	215	131	440	268	670	409	1270	775
60	50	31	105	64	195	119	400	244	610	372	1105	674
70	46	28	96	59	180	110	370	226	560	342	1050	641
80	43	26	90	55	170	104	350	214	530	323	990	604
90	40	24	84	51	160	98	320	195	490	299	930	567
100	38	23	79	48	150	92	305	186	460	281	870	531
125	34	21	72	44	130	79	275	168	410	250	780	476
150	31	19	64	39	120	73	250	153	380	232	710	433
175	28	17	59	36	110	67	225	137	350	214	650	397
200	26	16	55	34	100	61	210	128	320	195	610	372

Gas Connections

⚠ CAUTION ⚠

Pipe joint compounds (pipe dope) shall be resistant to the action of liquefied petroleum gas or any other chemical constituents of the gas being supplied.

The gas connection is made at the pipe nipple that extends outside the cabinet. The connection size is either 1/2- or 3/4-inch, as listed in **Table 9**.

For either a vertical or horizontal gas supply, install a ground joint union and a manual shutoff valve upstream of the unit control system, as shown in **Figure 10** (the requirements are the same). Installation of a trap with a minimum 3-inch (76 mm) drip leg is required.

⚠ DANGER ⚠

All components of a gas supply system must be leak-tested prior to placing the equipment in service. NEVER TEST FOR LEAKS WITH AN OPEN FLAME. Failure to comply could result in personal injury, property damage, or death.

Leak-test all connections by brushing on a leak-detecting solution. Bleed trapped air from gas lines as needed.

Table 9. Gas Connection Sizes

Gas Type	Unit Size	
	030–200	225–400
	Connection Size (Inches)	
Natural Gas	1/2	3/4
Propane		

NOTE: The above are *not* supply line sizes. They are gas connection sizes for a standard unit.

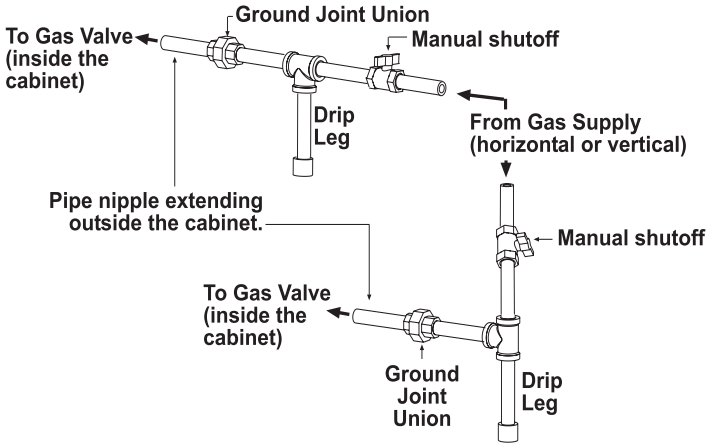

Figure 10. Gas Connections

WIRING INSTALLATION

⚠ CAUTION ⚠

- **Route wires so that they do not contact the flue wrapper or venter housing.**
- **If any of the original wire supplied with the appliance must be replaced, it must be replaced with wiring material having a temperature rating of at least 105°C, except for limit control, flame rollout, and sensor lead wires which must be rated at 150°C.**

All electrical wiring and connections, including electrical grounding MUST be made in accordance with the National Electric Code ANSI/NFPA No. 70 (latest edition) or, in Canada, with CSA Standard C22.1. In addition, the installer should be aware of any local ordinances or gas company requirements that might apply.

Supply Wiring

Check the rating plate on the heater for the supply voltage and current requirements. A dedicated line voltage supply with a disconnect switch should be run directly from the main electrical panel to the heater. All external wiring must be within approved conduit and have a minimum temperature rise rating of 60°C. Conduit must be run so as not to interfere with the heater access panel. If the installation requires a stepdown transformer (option CG on some models), follow the instructions shipped with the option package for attaching the transformer to the heater.

Supply wiring connections

The supply wiring enters at the rear of the heater, as shown in **Figure 11**. **Models APD, UDAP, and UDBP:** supply wiring connects directly to leads on the integrated circuit board. **Models UDAS and UDBS:** supply wiring connects to leads located inside a sealed electrical box. To maintain the sealing feature of the electrical box, always replace the cover plate. These models include a built-in disconnect switch (20A@115V or 10A@230V rating), as shown in **Figure 11**.

NOTE: The size of heater illustrated has a vertical terminal strip. Some sizes have a horizontal terminal strip.

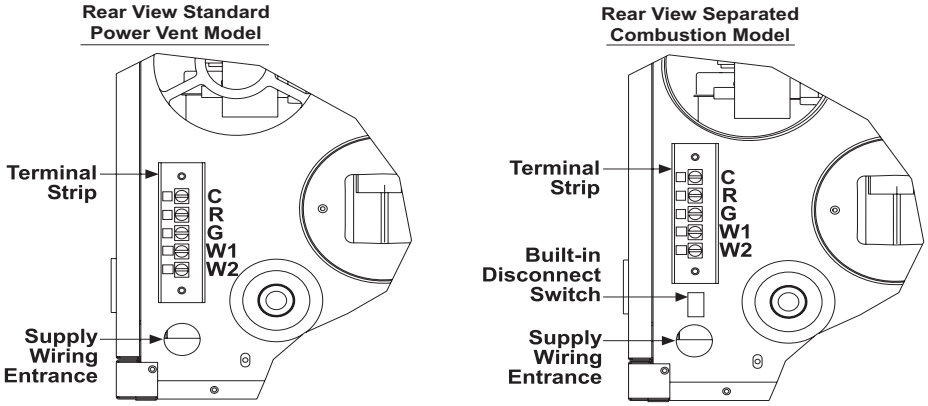

Figure 11. Supply Wiring Entrance and Control Connection Terminal Strip

Supply wiring connections at circuit board

The circuit board (see **Figure 12**) is located inside on the bottom of the control compartment. The circuit board is polarity sensitive. It is advisable to check the electrical supply ensure that the black wire is the *hot* wire and that the white wire is the *neutral* wire. The *hot* wire must be connected terminal L1 on the circuit board.

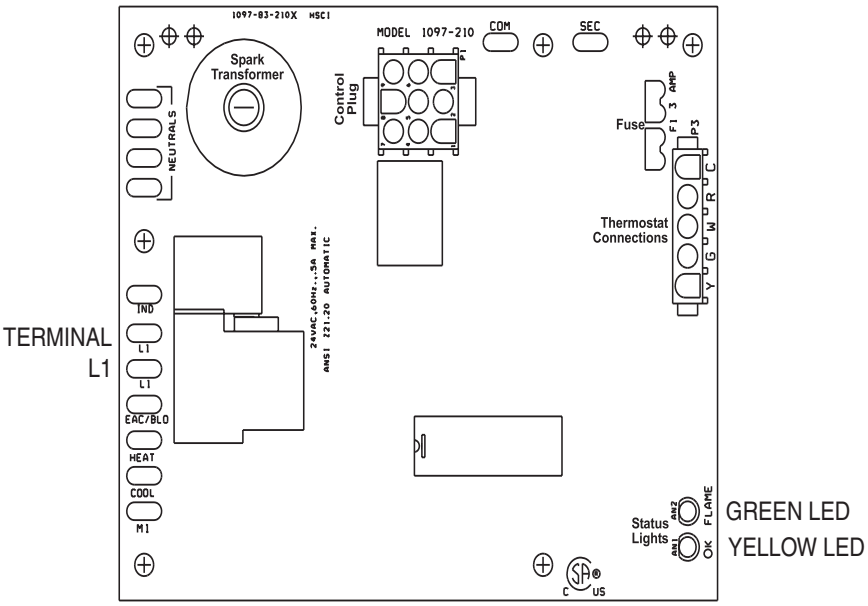

Figure 12. Circuit Board (DSI Integrated Control Module)

Control Wiring

For all models, the terminal strip for 24-volt control connections is located on the outside of the cabinet at the back of the heater, as shown in **Figure 11**. Wires from the terminal strip are factory-wired to the circuit board.

Wiring Diagrams

Typical wiring diagrams are shown in **Figure 13** and **Figure 14**.

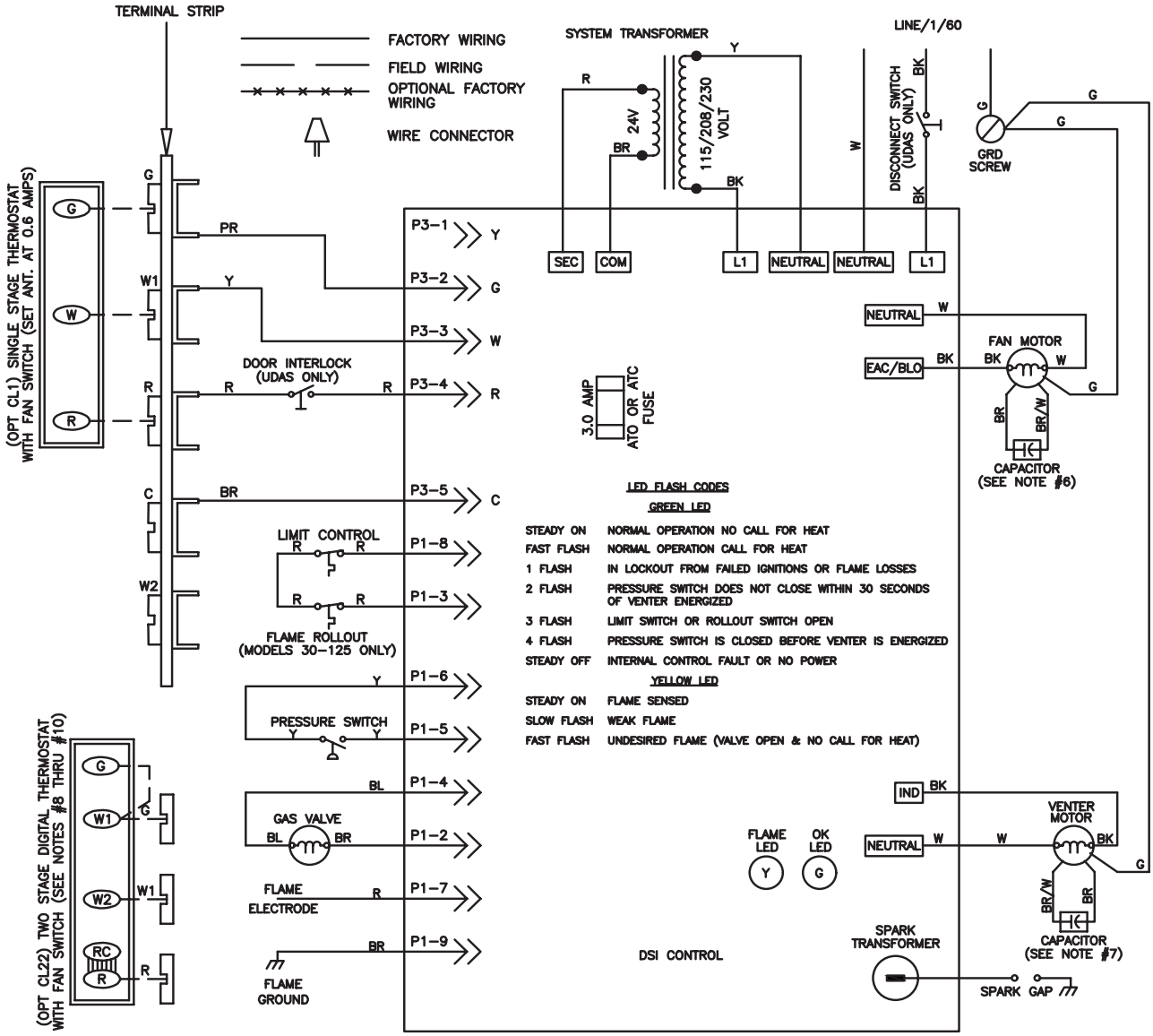

OPERATING SEQUENCE

1. SET THERMOSTAT AT LOWEST SETTING, (FAN SWITCH AT "AUTO" POSITION.
2. TURN ON MANUAL GAS VALVE.
3. TURN ON POWER TO UNIT.
4. SET THERMOSTAT AT DESIRED SETTING.
5. THERMOSTAT CALLS FOR HEAT, ENERGIZING THE VENTER MOTOR.
6. VENTER PRESSURE SWITCH CLOSES, FIRING UNIT AT FULL RATE.
7. BURNER FLAME IS SENSED, AND IN 30 SECONDS THE FAN MOTOR IS ENERGIZED.
8. IF THE FLAME IS EXTINGUISHED DURING MAIN BURNER OPERATION, THE INTEGRATED CONTROL SYSTEM CLOSES THE MAIN VALVE AND MUST BE RESET BY INTERRUPTING POWER TO THE CONTROL CIRCUIT (SEE LIGHTING INSTRUCTIONS).
9. SET FAN SWITCH AT "ON" POSITION FOR CONTINUOUS FAN OPERATION.

NOTES

1. THE FOLLOWING CONTROLS ARE FIELD INSTALLED OPTIONS: THERMOSTAT
2. DOTTED WIRING INSTALLED BY OTHERS.
3. CAUTION: IF ANY OF THE ORIGINAL WIRING AS SUPPLIED WITH THE APPLIANCE MUST BE REPLACED, IT MUST BE REPLACED WITH WIRING MATERIAL HAVING A TEMPERATURE RATING OF AT LEAST 105° C. EXCEPT FOR SENSOR LEAD WIRE, FLAME ROLLOUT AND LIMIT WIRING WHICH MUST BE 150° C.
4. USE 18 GA. WIRE FOR ALL WIRING ON THE UNIT.
5. LINE AND FAN MOTOR BRANCH WIRE SIZES SHOULD BE OF A SIZE TO PREVENT VOLTAGE DROPS BEYOND 5% OF SUPPLY LINE VOLTAGE.
6. CAPACITOR IS REMOTE MOUNTED AND INCLUDED ONLY ON 115V MODELS 150–400 AND 208/230V MODELS 100–400.
7. CAPACITOR IS REMOTE MOUNTED AND INCLUDED ONLY ON MODELS 150 – 400.
8. VERIFY JUMPER ON CL22 THERMOSTAT TERMINALS R TO RC.
9. FAN SWITCH OR LOW STAGE OF CL22 THERMOSTAT ENERGIZES THE BLOWER MOTOR.
10. HIGH STAGE OF CL22 THERMOSTAT INITIATES A CALL FOR HEAT.

FIELD CONTROL WIRING

TOTAL WIRE LENGTH	DISTANCE FROM UNIT TO CONTROL	MIN. RECOMMENDED WIRE GUAGE
150'	75'	#18 GA. WIRE
250'	125'	#16 GA. WIRE
350'	175'	#14 GA. WIRE

WIRING CODE
BLACK – BK
BROWN – BR
RED – R
ORANGE – O
YELLOW – Y
GREEN – G
BLUE – BL
PURPLE – PR
WHITE – W

Figure 13. Typical Wiring Diagram—Single-Stage Models

NOTE: Two-stage valve circuit is NOT available on all models.

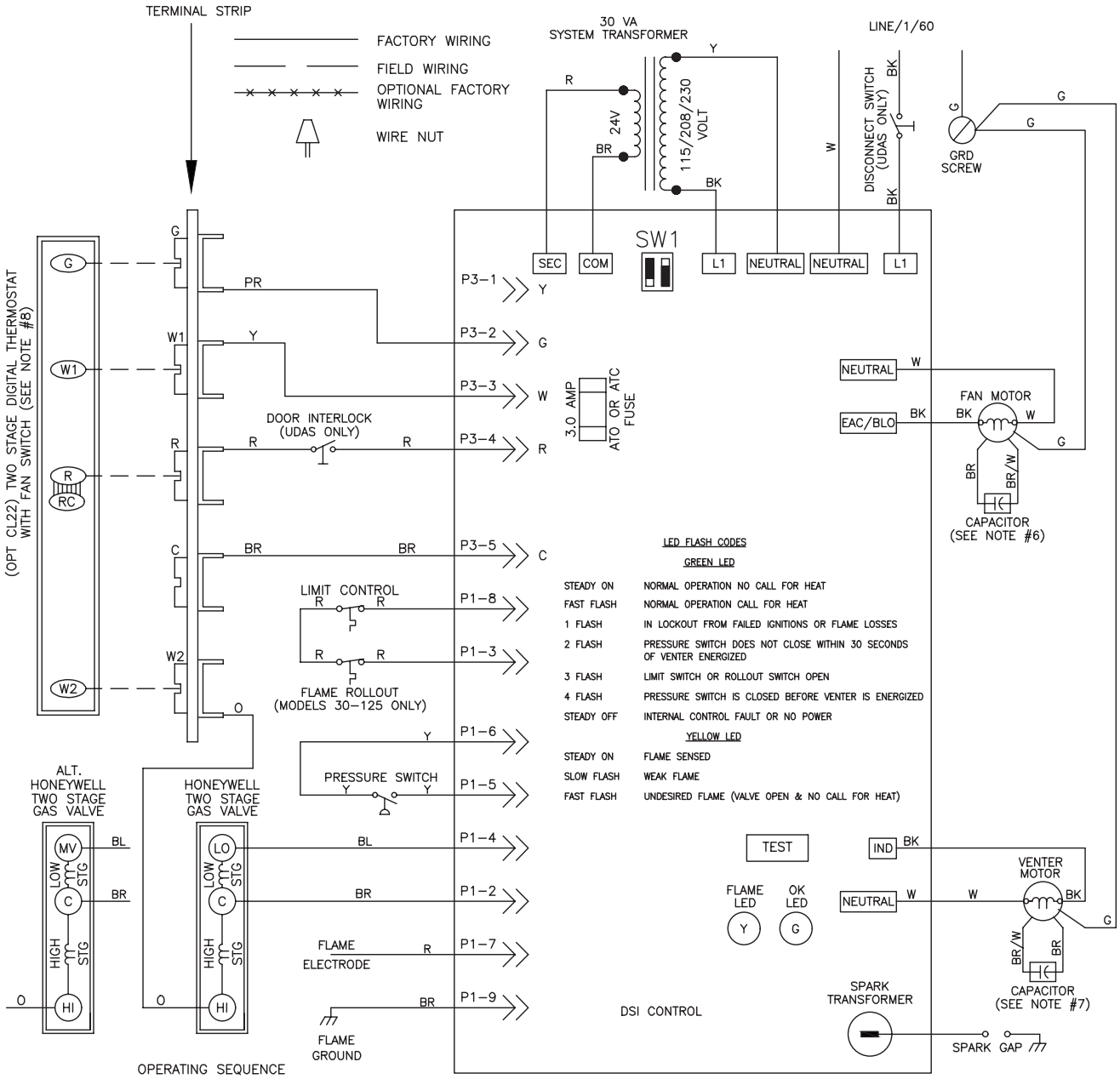

OPERATING SEQUENCE

1. SET THERMOSTAT AT LOWEST SETTING, (FAN SWITCH AT "AUTO" POSITION, OPTION CL18 ONLY).
2. TURN ON MANUAL GAS VALVE.
3. TURN ON POWER TO UNIT.
4. SET THERMOSTAT AT DESIRED SETTING.
5. LOW STAGE OF THERMOSTAT CALLS FOR HEAT, ENERGIZING THE VENTER MOTOR.
6. VENTER PRESSURE SWITCH CLOSES, FIRING UNIT AT LOW RATE.
7. BURNER FLAME IS SENSED, AND IN 30 SECONDS THE FAN MOTOR IS ENERGIZED.
8. HIGH STAGE OF THERMOSTAT CALLS FOR HEAT, FIRING UNIT AT FULL RATE.
9. SET FAN SWITCH AT "ON" POSITION FOR CONTINUOUS FAN OPERATION, OPTION CL18 ONLY.
10. IF THE FLAME IS EXTINGUISHED DURING MAIN BURNER OPERATION, THE INTEGRATED CONTROL SYSTEM CLOSES THE MAIN VALVE AND MUST BE RESET BY INTERRUPTING POWER TO THE CONTROL CIRCUIT (SEE LIGHTING INSTRUCTIONS).

FIELD CONTROL WIRING

TOTAL WIRE LENGTH	DISTANCE FROM UNIT TO CONTROL	MIN. RECOMMENDED WIRE GUAGE
150'	75'	#18 GA. WIRE
250'	125'	#16 GA. WIRE
350'	175'	#14 GA. WIRE

WIRING CODE
BLACK – BK
BROWN – BR
RED – R
ORANGE – O
YELLOW – Y
GREEN – G
BLUE – BL
PURPLE – PR
WHITE – W

NOTES

1. THE FOLLOWING CONTROLS ARE FIELD INSTALLED OPTIONS: THERMOSTAT
2. DOTTED WIRING INSTALLED BY OTHERS.
3. CAUTION: IF ANY OF THE ORIGINAL WIRING AS SUPPLIED WITH THE APPLIANCE MUST BE REPLACED, IT MUST BE REPLACED WITH WIRING MATERIAL HAVING A TEMPERATURE RATING OF AT LEAST 105° C. EXCEPT FOR SENSOR LEAD WIRE, FLAME ROLLOUT AND LIMIT WIRING WHICH MUST BE 150° C.
4. USE 18 GA. WIRE FOR ALL WIRING ON THE UNIT.
5. LINE AND FAN MOTOR BRANCH WIRE SIZES SHOULD BE OF A SIZE TO PREVENT VOLTAGE DROPS BEYOND 5% OF SUPPLY LINE VOLTAGE.
6. CAPACITOR IS REMOTE MOUNTED AND INCLUDED ONLY ON 115V MODELS 150–400 AND 208/230V MODELS 100–400.
7. CAPACITOR IS REMOTE MOUNTED AND INCLUDED ONLY ON MODELS 150 – 400.
8. SET THERMOSTAT FIRST STAGE ANTICIPATOR AT 0.6 AMPS AND SECOND STAGE ANTICIPATOR AT 0.2 AMPS.
9. JUMPER THERMOSTAT TERMINALS RH TO RC.

Figure 14. Typical Wiring Diagram—Two-Stage Models

Component Descriptions

NOTE: Refer to the TROUBLESHOOTING section for probable causes and reset instructions for the following components.

Pressure (combustion air proving) switch

⚠ DANGER ⚠

Safe operation of this unit requires proper venting flow. NEVER bypass the combustion air proving switch or attempt to operate the unit without the venter running and the proper flow in the vent system. Hazardous conditions could result.

The combustion air proving switch (see **Figure 15** for location) is a pressure sensitive switch that monitors air pressure to ensure that proper combustion airflow is available. On models APD, UDAP, and UDBP, the switch is a single-pole/normally-open device that closes when a negative pressure is sensed in the venter housing. On models UDAS and UDBS, the switch senses the differential pressure between the negative pressure in the venter housing and the pressure in the cabinet.

At startup when the heater is cold, the sensing pressure is at the most negative level, and as the heater and flue system warm up, the sensing pressure becomes less negative. After the system has reached equilibrium (about 20 minutes), the sensing pressure levels off.

If a restriction or excessive flue length/turns cause the sensing pressure to be outside the switch setpoint, the pressure switch will function to shut off the main burner. The main burner will remain off until the system has cooled and/or the flue system resistance is reduced.

Pressure switch settings are listed in **Table 10**.

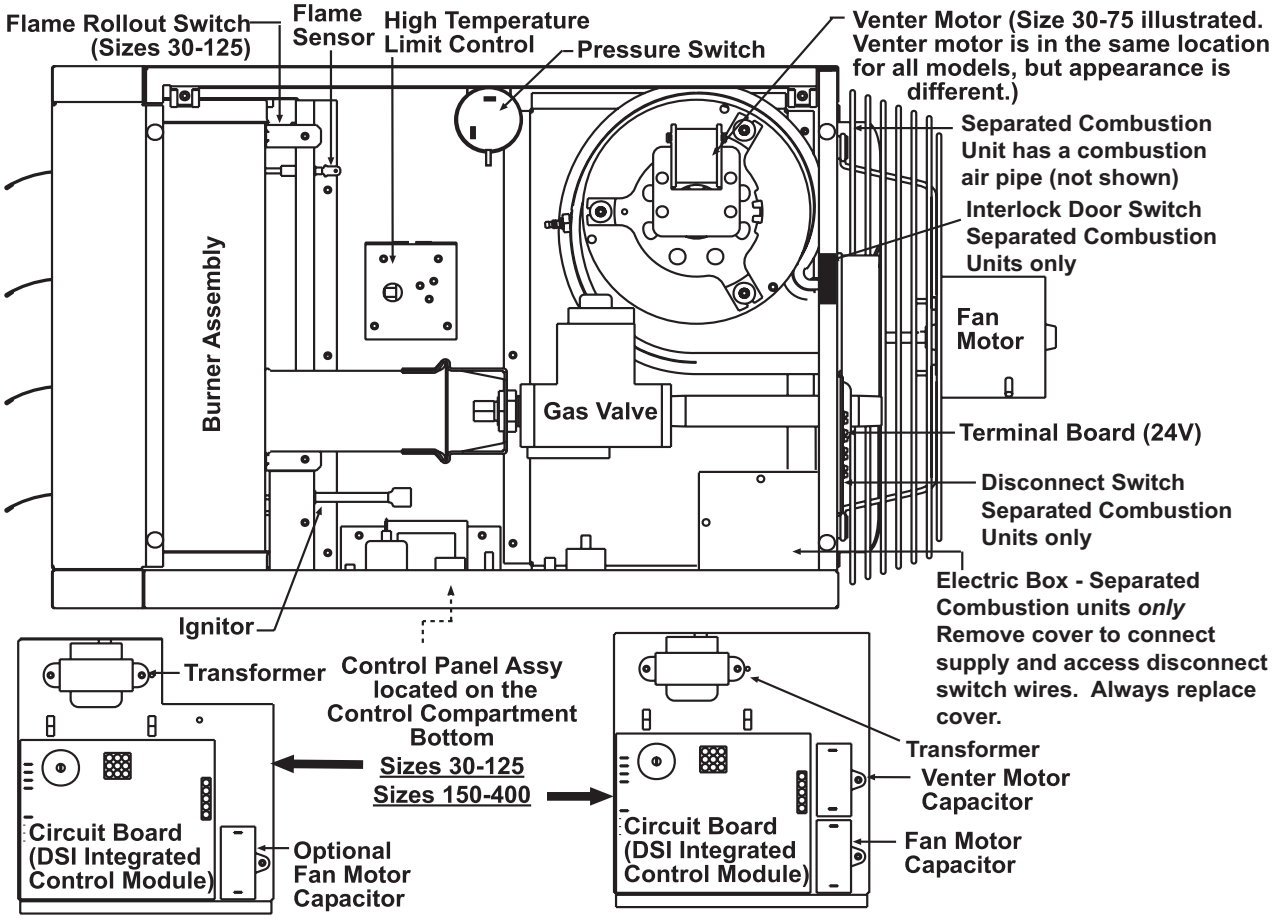

Figure 15. Component Locations

Table 10. Pressure Switch Settings						
Models APD, UDAP, and UDBP						
Unit Size	**Negative Pressure (IN WC)**				**Label Color**	**Switch PN**
	Startup Cold	**Equilibrium Hot**	**Setpoint OFF**	**Setpoint ON**		
030	1.0	0.8	0.4	0.6	Green	197030
045	1.0	0.8	0.4	0.6	Green	197030
060	1.0	0.8	0.5	0.7	Orange	196388
075	1.0	0.9	0.5	0.7	Orange	196388
100	0.9	0.7	0.5	0.7	Orange	196388
125	0.8	0.6	0.4	0.6	Green	197030
150, 175	0.8	0.7	0.4	0.6	Green	197030
200, 225	2.2	1.5	1.1	1.3	Blue	201158
250, 300	2.3	1.6	1.1	1.3	Blue	201158
350, 400	2.6	1.8	1.1	1.6	Red	201159
Models APD, UDAP, and UDBP with Option AV6						
Unit Size	**Negative Pressure (IN WC)**				**Label Color**	**Switch PN**
	Startup Cold	**Equilibrium Hot**	**Setpoint OFF**	**Setpoint ON**		
030	1.1	0.8	0.65	0.8	Yellow	197028
045	1.1	0.8	0.50	0.7	Orange	196388
060	0.9	0.8	0.60	0.8	Light blue	197029
075	1.0	0.8	0.60	0.8	Light blue	197029
100	0.9	0.7	0.55	0.7	White	196362
Models UDAS & UDBS						
Unit Size	**Differential Pressure (IN WC)**				**Label Color**	**Switch PN**
	Startup Cold	**Equilibrium Hot**	**Setpoint OFF**	**Setpoint ON**		
030	1.0	0.8	0.65	0.8	Yellow	197028
045	1.1	0.8	0.65	0.8	Yellow	197028
060	1.1	0.9	0.65	0.8	Yellow	197028
075	1.1	0.9	0.65	0.8	Yellow	197028
100	0.9	0.7	0.55	0.7	White	196362
125	0.8	0.6	0.45	0.6	Pink	197032
150, 175	0.8	0.6	0.40	0.6	Green	197030
200, 225	2.2	1.5	1.10	1.3	Blue	201158
250, 300	2.3	1.6	1.10	1.3	Blue	201158
350, 400	2.6	1.8	1.10	1.6	Blue	201158

High temperature limit control

⚠ WARNING ⚠

The auto-reset limit control will continue to shut down the heater until the cause is corrected. Never bypass the limit control; hazardous conditions could result.

All units are equipped with a temperature-activated, auto-reset limit control (see **Figure 15** for location). The control is factory-set and is non-adjustable. If the setpoint is reached, the limit control interrupts the electric supply to the gas valve. This safety device provides protection in the case of motor failure or lack of airflow due to a restriction at the inlet or outlet.

Flame rollout switch (unit sizes 030–125)

⚠ DANGER ⚠

If the manual-reset flame rollout switch activates, identify and correct the cause before resetting the switch. Never bypass the flame rollout switch; hazardous conditions could result.

Unit sizes 030–125 are equipped with a temperature-activated, manually-reset flame rollout switch (see **Figure 15** for location). The flame rollout switch is located at the top of the burner assembly. It is factory set and is non-adjustable. If the setpoint is reached, the flame rollout acts to interrupt the electric supply to the gas valve. If the flame rollout switch activates, identify and correct the cause before resetting the switch.

Component Descriptions—Continued

Interlock door switch (models UDAS and UDBS)

All sizes of heater model UDAS and UDBS are equipped with an interlock door switch (see **Figure 15** for location) that prevents the heater from operating when the service door panel is open. The service panel is equipped with a pliable gasket that fully seals the door to provide added protection to prevent building air from entering the combustion zone of the heater.

Gas valve

⚠ WARNING ⚠

The main operating gas valve is the prime safety shutoff. All gas supply lines must be free of dirt or scale before connecting the unit to ensure positive closure.

The main operating gas valve (see **Figure 15** for location) is powered by the 24-volt control circuit through the thermostat and safety controls. The valve is of the diaphragm type is preset at the factory and provides regulated gas flow.

Fan motor

The fan motor is equipped with thermal overload protection of the automatic reset type. Should the motor refuse to run, it may be because of improper current characteristics. Ensure that the correct voltage is available at the motor.

NOTE: If the unit is equipped with an optional, totally-enclosed motor or optional voltage, the motor's horsepower may be greater than the standard motor. Refer to the motor nameplate to verify its horsepower.

Venter motor

The venter motor (see **Figure 15** for location) is assembled to the venter wheel and operates to provide combustion airflow. Operation is controlled by the circuit board (see **Figure 12**). Refer to **Circuit board (DSI integrated control module)** section for details.

Thermostat

NOTE: IMPORTANT—all units MUST be operated by a 24-volt thermostat. Never use a line voltage disconnect switch as a means of operating the heater. Operation of unit sizes 030–125 by means other than by a 24-volt thermostat may result in the flame rollout switch tripping.

Use either an optional thermostat available with the heater or a field-supplied 24-volt thermostat. Install according to the thermostat manufacturer's instructions. Pay particular attention to the requirements regarding the location of the thermostat.

Ensure that if there is a heat anticipator setting on the thermostat, it is set at 0.6 amps or in accordance with the amperage value noted on the heater wiring diagram.

Make thermostat connections at the terminal strip on the back of the heater (see **Figure 11**). The strip has five terminals: C, R, G, W1, and W2. Refer to the wiring diagram provided with the heater.

Multiple heater control (options CL31 and CL32)

If the heater was ordered with a multiple heater control option, one thermostat can be used to control up to six heaters. This option includes a 40VA transformer that replaces the standard transformer in the control unit and a relay assembly that attaches to the additional unit. Option CL31 provides for control of two heaters. If control of additional heaters is desired (up to six total), option CL32, which is the relay assembly only, must be added to each additional heater. The option packages are shipped separately and include complete instructions on installation and wiring.

DDC controls—unit sizes 150–400 (options D10 and D14)

If the heater was ordered with option D10 or D14, it is equipped with a Novar® MINio control module (see **Figure 16**). The Novar control, with its accompanying relays and power transformer, is mounted on a specially-designed bracket in the control compartment of the unit (see **Figure 15**). This control offers a wide variety of input and output points that can be configured to meet a wide range of building management applications. User-selectable input types are thermistor, 4–20 milliamps, 1–5 volts, or digital.

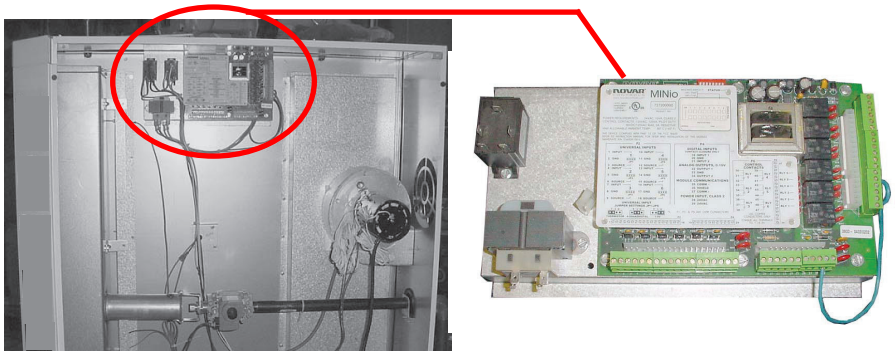

Figure 16. Novar® MINio Control Module

Option D10 includes the controller and the sensor, which is field-mounted at the heater discharge. Option D14 requires a field-supplied sensor that is compatible with the control. For regulatory compliance specifications and safety precautions, review the control manufacturer's installation instructions in the owner's envelope.

The recommended location for mounting the sensor is on the side panel (nozzle side) of a field-installed optional downturn nozzle (option CD2, CD3, or CD4). **Figure 17** shows the sensor included with option D10 and its mounting dimensions. Mount the sensor as follows:

1. Drill 7/8-inch hole in cabinet top above controller
2. Install bushing supplied with unit for running field-supplied sensor wire
3. Connect sensor wire to controller in accordance with wiring diagram provided with heater

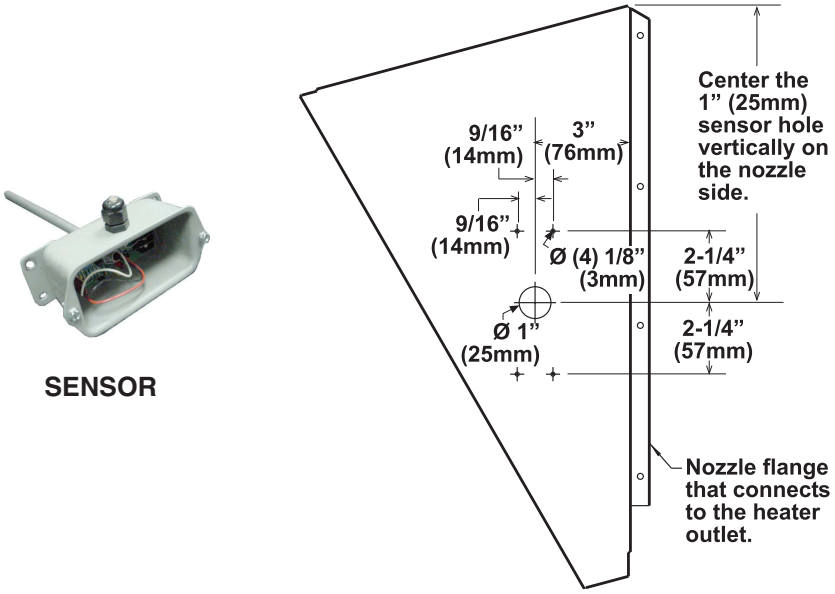

Figure 17. Mounting Option D10

Circuit board (DSI integrated control module)

The heater's ignition system is controlled by a direct-spark integrated control module (circuit board (see **Figure 12**)). The module monitors the safety devices and controls the operation of the fan and venter motors and the gas valve between heat cycles. The module's green and yellow LEDs are visible through a viewport on models UDAS and UDBS. To view the LEDs on models APD, UDAP, and UDBP, the door panel requires removal. **Table 11** lists module's LED status indications.

Component Descriptions—Continued

Circuit board (DSI integrated control module)—continued

Table 11. Circuit Board (DSI Integrated Control Module) LEDs

LED Type (Color)	LED Status	Indication
Control (green)	Steady ON	Normal operation, no call for heat
	Fast flash	Normal operation, call for heat
	One flash	System lockout, failed to detect or sustain flame
	Two flashes	Pressure switch did not close within 30 seconds of venter motor energized
	Three flashes	High limit or flame rollout switch open
	Four flashes	Pressure switch is closed before venter motor is energized
	Steady OFF	Blown fuse, no power, or defective board
Flame (yellow)	Steady ON	Flame is sensed
	Slow flash	Weak flame, current is below 1.0 (±50%) microamp
	Fast flash	Undesired flame, valve is open and no call for heat

Operating Sequence

Table 12 describes the heater's normal operating sequence. Refer to **Table 11** for LED indications.

Table 12. Normal Heat Cycle Operating Sequence

Step	Condition	Action
1. Call for heat	Terminal W is energized	Thermostat calls for heat by energizing terminal W
		Control determines whether limit switch is open or closed and if pressure switch is open
	Limit switch is open	Control deenergizes gas valve, turns fan/blower motor onto heat speed, and runs venter motor
		Green LED illuminates with three flashes
		Control is in soft lockout before returning to normal operation
	Pressure switch is closed	Green LED illuminates with four flashes
		Control waits indefinitely for pressure switch to open
	Pressure switch is open	Control proceeds to step 2
2. Prepurge	Venter motor is energized	Control waits for pressure switch to close
	Pressure switch not closed within 30 seconds of venter motor energizing	Green LED illuminates with two flashes
		Control maintains venter motor energized indefinitely as long as call for heat remains and pressure switch is open
	Pressure switch is proven closed	Control begins prepurge
	Flame is present at any time during prepurge	Prepurge is restarted
	Flame is present long enough to cause lockout	Control runs venter motor and runs fan/blower motor on heat speed
		When flame is no longer sensed, venter motor runs through post-purge and fan/blower motor runs through selected delay OFF time
		Control proceeds to soft lockout but still responds to open limit and flame
		Yellow LED flashes rapidly when lockout is due to undesired flame
	Venter motor runs for 20-second prepurge time	Control proceeds step 3
3. Ignition trial period	Spark and main gas valve are energized	The venter remains energized
	Flame is sensed during first 16 seconds	Control deenergizes spark and proceeds to heat fan/blower on delay
	Flame is not sensed during first 16 seconds	Control deenergizes spark and maintains gas valve energized for additional 1-second flame-proving period
	Flame is not present after flame-proving period	Control deenergizes gas valve and proceeds with ignition retries as specified in **Table 13**: abnormal function ***Ignition Retry***
	Flame is present after flame-proving period	Control proceeds to step 4
4. Fan/blower ON delay	30 seconds after gas valve has opened	Control energizes fan/blower motor
	Gas valve and venter motor remain energized	Control proceeds to step 5

Table 12. Normal Heat Cycle Operating Sequence—Continued		
Step	**Condition**	**Action**
5. Steady heat	Limit switch is closed	Control continuously monitors inputs
	Pressure switch is closed	
	Flame is established	
	Thermostat call for heat remains	
	Thermostat call for heat is removed	Control deenergizes gas valve and proceeds to steps 6 and 7
6. Post-purge	Thermostat is satisfied	Venter motor remains on for 45-second post-purge period
7. Fan/blower OFF delay		Fan/blower motor is deenergized after 120-second fan/blower OFF delay

Abnormal Heat Cycle Functions

Table 13 describes the heater's abnormal heat cycle functions. Refer to **Table 11** for LED indications.

Table 13. Abnormal Heat Cycle Functions		
Abnormal Function	**Condition**	**Action**
Interrupted thermostat call for heat	Thermostat demand for heat is removed before flame is recognized	Control runs venter motor for post-purge period
		All outputs are deenergized
	Thermostat demand for heat is removed after successful ignition	Control deenergizes gas valve
		Control runs venter motor through post-purge period
		Control runs fan/blower motor on heat speed for selected delay OFF time
Ignition retry	Flame is not established on first trial for ignition period	Control deenergizes gas valve
		Venter motor remains energized for 10-second inter-purge period
		Spark and gas valve are re-energized
		Control initiates another trial for ignition
	Flame is not established on second trial for ignition	Control deenergizes gas valve
		Control runs fan/blower motor on heat speed
		Venter motor remains energized
		Fan/blower motor deenergizes after 120 seconds and spark and gas valve are re-energized
		Control initiates another trial for ignition (this fan delay is self-healing feature for open auxiliary limit switch)
	Flame is not established on third trial for ignition	Control deenergizes gas valve
		Venter motor remains energized for 10-second inter-purge period
		Spark and gas valve are re-energized
		Control initiates another trial for ignition
	Flame is not established on fourth trial for ignition (initial try plus three re-tries)	Control deenergizes gas valve and proceeds to lockout
		Green LED illuminates with one flash to indicate ignition failure lockout
Limit switch*	Limit switch is open and call for heat is present	Control deenergizes gas valve
		Control runs venter motor and runs fan/blower motor on heat speed
		Control is in soft lockout (Green LED illuminates with three flashes) before returning to normal operation
	Limit switch re-closes or call for heat is not present	Control runs venter motor through post-purge period
		Control runs fan/blower motor on heat speed through selected delay OFF time
*The limit switch is ignored unless a call for heat is present (terminal W energized).		

Abnormal Heat Cycle Functions—Continued

Table 13. Abnormal Heat Cycle Functions—Continued

Abnormal Function	Condition	Action
Pressure switch operation	Pressure switch opens before trial for ignition period	Venter motor runs through 2-second pressure switch recognition delay
		Control deenergizes gas valve
		Control runs venter motor through post-purge period
		Control restarts heat cycle at pressure switch proving state if call for heat still exists
	Pressure switch opens for less than 2 seconds during trial for ignition period (shall not interrupt heat cycle)	Control deenergizes gas valve while pressure switch is open
	Pressure switch opens after successful ignition	Control deenergizes gas valve
	Flame is lost before end of 2-second pressure switch recognition delay	Control responds to loss of flame
	Pressure switch remains open for 2 seconds and flame remains	Control deenergizes gas valve
		Control runs venter motor through post-purge period
		Control runs fan/blower motor on heat speed through selected delay OFF time
		When fan OFF delay ends, fan/blower motor is deenergized, and heat cycle begins if call for heat still exists
Continuous fan operation	Thermostat calls for continuous fan (G) without call for heat	Fan motor is energized after 0.25-second delay (this brief ON delay allows terminal G to energize slightly before terminal Y and allows external changeover relay to switch from terminal G to terminal W without causing momentary glitches in fan/blower output
		Fan remains energized as long as call for fan remains without call for heat
	Thermostat calls for heat (W) during continuous fan operation	Fan/blower is deenergized
		Call for fan is ignored during lockout

Fault Modes

Table 14 describes the heater's fault modes. Refer to **Table 11** for LED indications.

Table 14. Fault Modes

Fault Mode	Condition	Action
Undesired flame	Flame is sensed longer than 20 seconds while gas valve is deenergized	Control runs venter motor and runs fan/blower motor on heat speed
		When flame is no longer sensed, venter motor runs through post-purge and fan/blower motor runs through selected delay OFF time
		Control proceeds to soft lockout but still responds to open limit and flame
		Yellow LED flashes rapidly when lockout is due to undesired flame
Gas valve relay fault	Control senses that gas valve is energized for more than 1 second when control is not attempting to energize gas valve or control senses that gas valve is not energized when it is supposed to be energized	Control proceeds to lockout (green LED OFF)
		Control assumes either that contacts of relay driving gas valve have welded shut or that sensing circuit has failed
		Venter motor is forced OFF to open pressure switch to stop gas flow unless flame is present
	Control senses that gas valve is closed when it should be open (has not deenergized after venter motor has been shut off for 15 seconds	Venter motor is re-energized to vent unburned gas
Soft lockout	Control does not initiate call for heat or call for continuous fan operation while in lockout	Control still responds to open limit and undesired flame
		Lockout is automatically reset after 1 hour
		Lockout may be manually reset by removing power from control for more than 1 second or by removing thermostat call for heat for more than 1 but less than 20 seconds
Hard lockout	Control detects fault on control board	Green LED is extinguished
		Control remains in lockout as long as fault remains
		Hard lockout automatically resets when hardware fault clears
Power interruption	Momentary interruption or voltage level is below minimum operating voltage (line voltage or low voltage)	System self-recovers without lockout when voltage returns to operating range
	Interruption <80 milliseconds	Control does not change operating state
	Interruption >80 milliseconds	Control may interrupt current operating cycle to restart

Startup

Pre-startup checklist

Check the following ***before*** startup:

- ❑ Check to ensure that all screws used to secure shipping brackets have been re-installed in heater cabinet
- ❑ Check suspension—unit must be secure and level
- ❑ Check to ensure that clearances from combustibles are in accordance with **Table 3**
- ❑ Check vent system to ensure that it is installed in accordance with appropriate venting provided

⚠ DANGER ⚠

All components of a gas supply system must be leak tested prior to placing equipment in service. NEVER TEST FOR LEAKS WITH AN OPEN FLAME. Failure to comply could result in personal injury, property damage, or death.

- ❑ Check piping for leaks and proper gas line pressure and bleed trapped air from gas lines (refer to **Gas Connections** section)
- ❑ Check electrical wiring—ensure that all wire gauges are as recommended—service disconnect switch should be used—verify that fusing or circuit breakers are adequate for load use
- ❑ Check polarity—verify that line voltage exists between black L1 wire and earth ground
- ❑ If installation is at elevation above 6,000 feet (1,830 meters), replace pressure switch in accordance with **Pressure switch replacement** section

Startup sequence

⚠ DANGER ⚠

For your safety, read before operating. If you do not follow these instructions exactly, a fire or explosion may result, causing property damage, personal injury, or loss of life.

- **This appliance does not have a pilot. It is equipped with an ignition device which automatically lights the burner. Do not try to light the burner by hand.**
- **Before operating, smell all around the appliance area for gas. Be sure to smell next to the floor because some gas is heavier than air and will settle on the floor.**

WHAT TO DO IF YOU SMELL GAS

- **Do not try to light any appliance.**
- **Do not touch any electrical switch; do not use any phone in your building.**
- **Leave the building immediately.**
- **Immediately call your gas supplier from a phone remote from the building. Follow the gas supplier's instructions.**
- **If you cannot reach your gas supplier, call your fire department.**

Use only your hand to turn the gas control ON/OFF knob on the gas valve. Never use tools. If the valve ON/OFF knob will not turn by hand, do not try to repair it. Call a qualified service technician. Force or attempted repair may result in a fire or explosion.

Should overheating occur, or the gas supply control system fail to shut off the flow of gas, turn off the manual gas valve to the appliance before shutting off the electrical supply.

Do not use this appliance if any part has been under water. Immediately call a qualified service technician to inspect the appliance and to replace any part of the control system and any gas control which has been under water.

Startup—Continued

Startup sequence—continued

Startup the heater as follows:

1. Set thermostat at lowest setting.
2. Turn OFF all electric power to appliance.

NOTE: This appliance is equipped with an ignition device that automatically lights the burner. Do not try to light the burner by hand.

3. Open access door and locate gas control (ON/OFF) knob or switch on gas valve (see **Figure 18**).

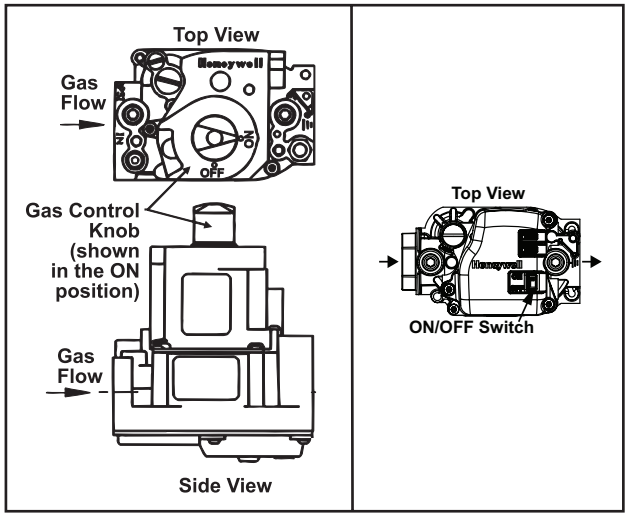

Figure 18. Gas Valve ON/OFF Control

4. Turn gas control switch to OFF or turn knob clockwise to OFF.
5. Wait 5 minutes to clear out any gas and then smell for gas (including near floor).
   a. If you smell gas, STOP! and follow steps in DANGER message listed above or on heater operating label.
   b. If you do not smell gas, proceed to step 6.
6. Turn gas control switch to ON or turn knob counterclockwise to ON.
7. Close access door.
8. Turn ON electric power to heater.
9. Set thermostat to desired setting.
   a. If heater does not operate, follow instructions in step 13 or on heater operating label and call your service technician.
   b. If heater operates, thermostat calls for heat, which energizes venter motor.
10. Venter pressure switch closes, which fires unit.
11. Burner flame is sensed and in 30 seconds after gas valve is energized, fan motor is energized.
12. If flame is extinguished during main burner operation, integrated control system closes main valve and must be reset by interrupting power to control circuit (refer to lighting instructions provided with heater).
13. TO TURN OFF GAS TO APPLIANCE:
   a. Set thermostat to lowest setting.
   b. If service is to be performed, turn off all electric power to appliance.
   c. Open the access door.
   d. Turn gas control switch to OFF or turn knob clockwise to OFF (do not force).
   e. Close access door.

Post-startup checklist

Check the following ***after*** startup:

- ❑ **Vent system testing procedure:** perform the following steps for each heater or utility heater connected to the venting system and placed in operation while any other appliance(s) connected to the venting system(s) is not in operation:
  - a. Seal unused openings(s) in the venting system.
  - b. Inspect the venting system for proper size and horizontal pitch as required in the National Flue Gas Code (ANSI Z223.1/NFPA 54) or the Natural Gas and Propane Installation Code (CSA B149.1) and the venting instructions provided. Verify that there is no blockage or restriction, leakage, corrosion, and/or other deficiencies that could cause an unsafe condition.
  - c. In so far as is practical, close all doors, windows, other open spaces within the building and all doors between the space in which the appliance(s) connected to the venting system is located. Turn on clothes dryers and any exhaust fans (such as range hoods and bathroom exhausts) so they operate at maximum speed. Do not operate a summer exhaust fan. Close fireplace dampers.
  - d. Following the lighting instructions provided with the heater, place the utility heater being inspected in operation. Adjust the thermostat so that the utility heater will operate continuously.
  - e. After it has been determined that each utility heater connected to the venting system properly vents when tested, as outlined above, return doors, windows, exhaust fans, fireplace dampers, and any other gas-burning appliance to their previous condition of use.
  - f. If improper venting is observed during any of the above tests, the venting system must be corrected.
- ❑ With the unit in operation, measure valve outlet gas pressure. If operated at high altitude, adjust the outlet gas pressure for altitude in accordance with **High-altitude deration** section).
- ❑ Turn the unit OFF and ON, pausing 2 minutes between each cycle. Observe for smooth ignition.
- ❑ Place the literature bag that contains the Limited Warranty, this booklet, the venting instructions, and any control or optional information in an accessible location near the heater.

⚠ DANGER ⚠

- **The gas burner in this gas-fired equipment is designed and equipped to provide safe controlled *complete combustion*. However, *if the installation* does not permit the burner to receive the proper supply of combustion air, complete combustion may not occur. The result is *incomplete combustion*, which produces carbon monoxide, a poisonous gas that can cause death. *Safe operation of indirect-fired gas burning equipment requires a properly operating vent system that vents all flue products to the outside atmosphere*. FAILURE TO PROVIDE PROPER VENTING WILL RESULT IN A HEALTH HAZARD THAT COULD CAUSE SERIOUS PERSONAL INJURY OR DEATH.**
- **Always comply with the combustion air requirements listed in the installation codes and in this manual. Combustion air at the burner should be regulated only by manufacturer-provided equipment. NEVER RESTRICT OR OTHERWISE ALTER THE SUPPLY OF COMBUSTION AIR TO ANY HEATER. Heater models APD, UDAP, and UDBP installed in a confined space must be supplied with air for combustion as required by code and the requirements listed in this manual. MAINTAIN THE VENT OR VENT/COMBUSTION AIR SYSTEM IN STRUCTURALLY SOUND AND PROPER OPERATING CONDITION.**

Adjustments

After startup, the valve outlet pressure must be measured and adjusted if necessary in accordance with the **Manifold pressure adjustment** section. If the heater is being installed at an elevation above 2,000 feet (610 meters), the input rate will have to be derated in accordance with the **High-altitude deration** section. Before input rate can be derated for installations above 6,000 feet (1,830 meters) in elevation, the pressure switch must be replaced in accordance with the **Pressure switch replacement** section.

Adjustments—Continued

Manifold pressure adjustment

If the heater is being installed at an elevation above 6,000 feet (1,830 meters), replace the pressure switch in accordance with the **Pressure switch replacement** section and then adjust the manifold pressure in accordance with the **High-altitude deration** section. For installations less than 2,000 feet (610 meters), adjust the manifold (outlet) pressure as follows.

⚠ WARNING ⚠

Valve outlet gas pressure must never exceed 3.5 IN WC for natural gas or 10 IN WC for propane. Maximum inlet supply pressure for natural gas or propane is 14 IN WC. Maximum gas pressure can never be exceded either during operation or when unit is static (with lock-up regulator).

⚠ CAUTION ⚠

Before attempting to measure or adjust valve outlet gas pressure, the inlet supply pressure must be within the specified range both when the heater is in operation and when it is on standby. Incorrect inlet pressure could cause excessive valve outlet gas pressure immediately or at some future time. If natural gas supply pressure is too high, install a regulator in the supply line before it reaches the heater. If natural gas supply pressure is too low, contact your gas supplier.

NOTES:

- **Measuring outlet pressure cannot be done until the heater is in operation.**
- **During normal operation at sea level, adjustment to factory-setting should not be necessary.**
- **For natural gas: when the heater leaves the factory, the combination gas valve is set so that the valve outlet gas pressure for a single-stage valve or high fire of a two-stage valve is regulated to 3.5 IN WC. Low fire on a two-stage valve is set to 1.8 IN WC. Inlet supply pressure to the valve for natural gas must be a minimum of 5 IN WC or as noted on the rating plate and a maximum of 14 IN WC.**
- **For propane: when the heater leaves the factory, the combination gas valve is set so that the valve outlet gas pressure for a single-stage valve or high fire of a two-stage valve is regulated to 10 IN WC. Low fire on a two-stage valve is set to 5.0 IN WC. Inlet supply pressure to the valve for propane must be a minimum of 11 IN WC and a maximum of 14 IN WC.**
- **Gas conversion kits are available for changing from propane to natural gas or natural gas to propane. A factory-authorized conversion kit MUST be used.**

1. Turn knob or switch on top of valve to OFF to prevent flow to gas valve.

NOTE: A manometer (fluid-filled gauge) is recommended rather than a spring-type gauge due to the difficulty of maintaining the calibration of a spring-type gauge. Use a water column manometer that is readable to the nearest tenth of an inch.

2. Connect manometer to 1/8-inch output pressure tap on valve (see **Figure 19**).
3. Open manual valve and operate heater. For models UDAS and UDBS, depress and hold door safety switch.
4. Observe manometer gauge to measure outlet pressure of gas valve. To measure low-stage pressure on unit equipped with two-stage valve, disconnect wire from the HI terminal on valve. Be sure to reconnect wire.

⚠ CAUTION ⚠

DO NOT bottom out the gas valve regulator screw. This can result in excessive overfire and heat exchanger failure due to unregulated manifold pressure.

5. If manometer reading does not indicate that valve outlet pressure is in accordance with **Table 15**, remove cap from regulator screw(s) (see **Figure 19**) and adjust pressure by turning regulator screw IN (clockwise) to increase pressure or OUT (counterclockwise) to decrease pressure.
6. When manometer reading indicates that outlet pressure is in accordance with **Table 15**, disconnect manometer and install cap(s) on regulator screw(s).

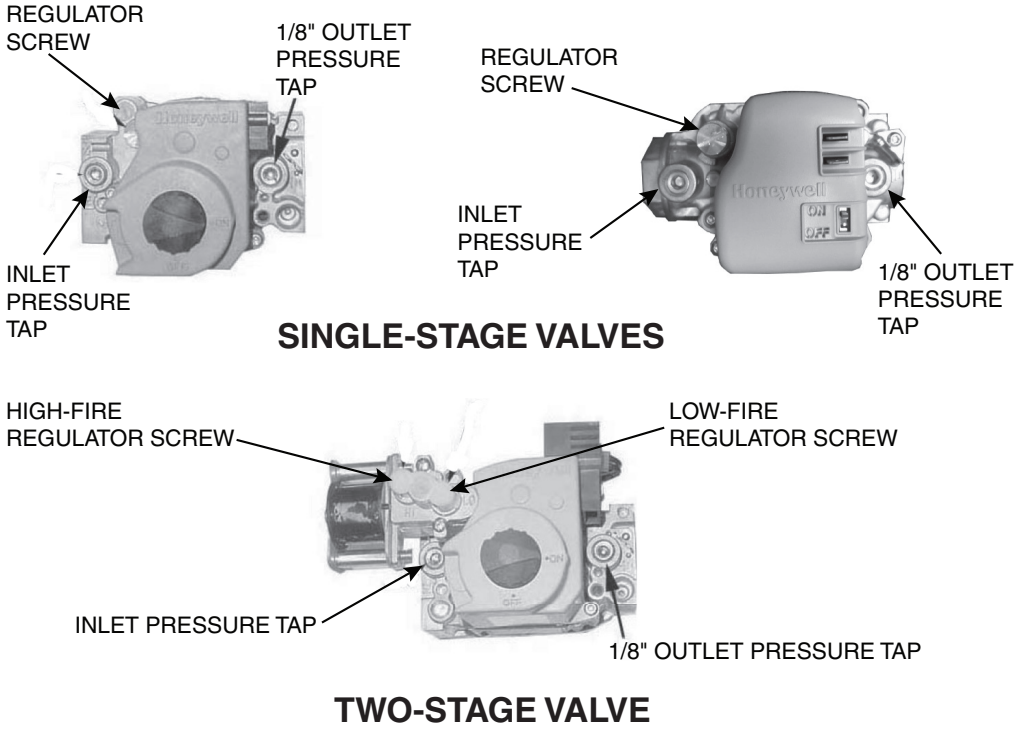

Figure 19. Manifold Pressure Adjustment

Table 15. Manifold Pressure Settings by Altitude

Altitude		Single-Stage and Two-Stage High-Fire		Two-Stage Low-Fire	
Feet	Meters	Natural Gas	Propane	Natural Gas	Propane
		Required Manifold Pressure (IN WC)			
Installation in US					
0–2000	0–610	3.5	10.0	1.8	5.0
2001–3000	611–915	3.1	8.8	1.6	4.4
3001–4000	916–1220	3.0	8.5	1.5	4.2
4001- 5000	1221–1525	2.8	8.1	1.5	4.1
5001–6000	1526–1830	2.7	7.7	1.4	3.9
6001–7000	1831–2135	2.6	7.4	1.3	3.7
7001–8000	2136–2440	2.5	7.1	1.3	3.5
8001–9000	2441–2745	2.4	6.7	1.2	3.4
9001–10,000	2746–3045	2.3			
Installation in Canada					
0–2000	0–610	3.5	10.0	1.8	5.0
2001–4500	611–1373	2.8	8.1	1.5	4.1

High-altitude deration

For installations above 2,000 feet (610 meters), derate the input rate as follows.

1. Ensure that pressure switch has been replaced in accordance with **Pressure switch replacement** section.
2. Determine correct outlet pressure (refer to **Table 15**) for elevation of installation. If unsure of elevation, contact local gas supplier.
3. Turn knob or switch on top of valve to OFF to prevent flow to gas valve.

Adjustments—Continued

High-altitude deration—continued

NOTE: A manometer (fluid-filled gauge) is recommended rather than a spring-type gauge due to the difficulty of maintaining the calibration of a spring-type gauge. Use a water column manometer that is readable to the nearest tenth of an inch.

4. Connect manometer to 1/8-inch output pressure tap on valve (see **Figure 19**).
5. For single-stage or two-stage high fire valve:
   a. Turn knob or switch on top of valve to ON.
   b. Remove cap from regulator screw (see **Figure 19**) and adjust pressure in accordance with **Table 15** by turning regulator screw IN (clockwise) to increase pressure or OUT (counterclockwise) to decrease pressure.
6. For two-stage low fire valve:
   a. Disconnect wire from HI terminal on gas valve.
   b. Remove cap from low-fire regulator screw (see **Figure 19**) and adjust pressure in accordance with **Table 15** by turning regulator screw IN (clockwise) to increase pressure or OUT (counterclockwise) to decrease pressure.
   c. Reconnect wire to Hi terminal on gas valve.
7. Turn up thermostat. For models UDAS and UDBS, depress and hold door safety switch.
8. Cycle burner once or twice to properly seat adjustment spring in valve and recheck outlet pressure. When pressure corresponds to **Table 15**, disconnect manometer and install cap on regulator screw.
9. Check for leakage at 1/8-inch outlet pressure tap fitting. Correct as necessary.
10. Connect manometer to inlet pressure tap (see **Figure 19**). While heater is operating, measure inlet pressure, which should be between 5 and 13.5 IN WC for natural gas or between 11 and 13.5 IN WC for propane.
11. If inlet pressure is not between 5 and 13.5 IN WC for natural gas or between 11 and 13.5 IN WC for propane, inlet pressure must be corrected and manifold (outlet) pressure must be rechecked.
12. Input and/or capacity of heater changes with deration (refer to **Table 16** or **Table 17**). Use permanent marker to fill in appropriate input and capacity information from **Table 16** or **Table 17** on high-altitude adjustment label (in literature bag provided with unit). Select location for label on outside of heater access panel that will be conspicuous to anyone operating or servicing unit. Ensure that surface is clean and dry and affix label.
13. Observe heater operation for at least one complete cycle to check for safe and proper operation (for models UDAS and UDBS, depress and hold safety door switch).

Table 16. Inputs and Capacities by Altitude in US

Altitude		Normal Input (BTUh)	Thermal Output Capacity (BTUh)	Minimum Input (BTUh)	Normal Input (BTUh)	Thermal Output Capacity (BTUh)	Minimum Input (BTUh)
Feet	Meters						
Unit Size		030			045		
0–2000	0–610	30,000	24,600	30,000	45,000	37,350	45,000
2001–3000	611–915	28,200	23,124	28,200	42,300	35,109	42,300
3001–4000	916–1220	27,600	22,632	27,600	41,400	34,362	41,400
4001–5000	1221–1525	27,000	22,140	27,000	40,500	33,615	40,500
5001–6000	1526–1830	26,400	21,648	26,400	39,600	32,868	39,600
6001–7000	1831–2135	25,800	21,156	25,800	38,700	32,121	38,700
7001–8000	2136–2440	25,200	20,664	25,200	37,800	31,374	37,800
8001–9000	2441–2745	24,600	20,172	24,600	36,900	30,627	36,900
9001–10,000	2746–3045	24,000	19,680	24,000	36,000	29,880	36,000

Table 16. Inputs and Capacities by Altitude in US—Continued							
Altitude		Normal Input (BTUh)	Thermal Output Capacity (BTUh)	Minimum Input (BTUh)	Normal Input (BTUh)	Thermal Output Capacity (BTUh)	Minimum Input (BTUh)
Feet	Meters						
	Unit Size		060			075	
0–2000	0–610	60,000	49,800	42,000	75,000	62,250	52,500
2001–3000	611–915	56,400	46,812	39,480	70,500	58,515	49,350
3001–4000	916–1220	55,200	45,816	38,640	69,000	57,270	48,300
4001–5000	1221–1525	54,000	44,820	37,800	67,500	56,025	47,250
5001–6000	1526–1830	52,800	43,824	36,960	66,000	54,780	46,200
6001–7000	1831–2135	51,600	42,828	36,120	64,500	53,535	45,150
7001–8000	2136–2440	50,400	41,832	35,280	63,000	52,290	44,100
8001–9000	2441–2745	49,200	40,836	34,440	61,500	51,045	43,050
9001–10,000	2746–3045	48,000	39,840	33,600	60,000	49,800	42,000
	Unit Size		100			125	
0–2000	0–610	105,000	88,200	73,500	120,000	100,800	84,000
2001–3000	611–915	98,700	82,908	69,090	112,800	94,752	78,960
3001–4000	916–1220	96,600	81,144	67,620	110,400	92,736	77,280
4001–5000	1221–1525	94,500	79,380	66,150	108,000	90,720	75,600
5001–6000	1526–1830	92,400	77,616	64,680	105,600	88,704	73,920
6001–7000	1831–2135	90,300	75,852	63,210	103,200	86,688	72,240
7001–8000	2136–2440	88,200	74,088	61,740	100,800	84,672	70,560
8001–9000	2441–2745	86,100	72,324	60,270	98,400	82,656	68,880
9001–10,000	2746–3045	84,000	70,560	58,800	96,000	80,640	67,200
	Unit Size		150			175	
0–2000	0–610	150,000	124,500	105,000	175,000	145,250	122,500
2001–3000	611–915	141,000	117,030	98,700	164,500	136,535	115,150
3001–4000	916–1220	138,000	114,540	96,600	161,000	133,630	112,700
4001–5000	1221–1525	135,000	112,050	94,500	157,500	130,725	110,250
5001–6000	1526–1830	132,000	109,560	92,400	154,000	127,820	107,800
6001–7000	1831–2135	129,000	107,070	90,300	150,500	124,915	105,350
7001–8000	2136–2440	126,000	104,580	88,200	147,000	122,010	102,900
8001–9000	2441–2745	123,000	102,090	86,100	143,500	119,105	100,450
9001–10,000	2746–3045	120,000	99,600	84,000	140,000	116,200	98,000
	Unit Size		200			225	
0–2000	0–610	200,000	166,000	140,000	225,000	186,750	157,500
2001–3000	611–915	188,000	156,040	131,600	211,500	175,545	148,050
3001–4000	916–1220	184,000	152,720	128,800	207,000	171,810	144,900
4001–5000	1221–1525	180,000	149,400	126,000	202,500	168,075	141,750
5001–6000	1526–1830	176,000	146,080	123,200	198,000	164,340	138,600
6001–7000	1831–2135	172,000	142,760	120,400	193,500	160,605	135,450
7001–8000	2136–2440	168,000	139,440	117,600	189,000	156,870	132,300
8001–9000	2441–2745	164,000	136,120	114,800	184,500	153,135	129,150
9001–10,000	2746–3045	160,000	132,800	112,000	180,000	149,400	126,000
	Unit Size		250			300	
0–2000	0–610	250,000	207,500	175,000	300,000	249,000	210,000
2001–3000	611–915	235,000	195,050	164,500	282,000	234,060	197,400
3001–4000	916–1220	230,000	190,900	161,000	276,000	229,080	193,200
4001–5000	1221–1525	225,000	186,750	157,500	270,000	224,100	189,000
5001–6000	1526–1830	220,000	182,600	154,000	264,000	219,120	184,800
6001–7000	1831–2135	215,000	178,450	150,500	258,000	214,140	180,600
7001–8000	2136–2440	210,000	174,300	147,000	252,000	209,160	176,400
8001–9000	2441–2745	205,000	170,150	143,500	246,000	204,180	172,200
9001–10,000	2746–3045	200,000	166,000	140,000	240,000	199,200	168,000

Adjustments—Continued

High-altitude deration—continued

Table 16. Inputs and Capacities by Altitude in US—Continued							
Altitude		Normal Input (BTUh)	Thermal Output Capacity (BTUh)	Minimum Input (BTUh)	Normal Input (BTUh)	Thermal Output Capacity (BTUh)	Minimum Input (BTUh)
Feet	Meters						
Unit Size		350			400		
0–2000	0–610	350,000	290,500	245,000	400,000	332,000	280,000
2001–3000	611–915	329,000	273,070	230,300	376,000	312,080	263,200
3001–4000	916–1220	322,000	267,260	225,400	368,000	305,440	257,600
4001–5000	1221–1525	315,000	261,450	220,500	360,000	298,800	252,000
5001–6000	1526–1830	308,000	255,640	215,600	352,000	292,160	246,400
6001–7000	1831–2135	301,000	249,830	210,700	344,000	285,520	240,800
7001–8000	2136–2440	294,000	244,020	205,800	336,000	278,880	235,200
8001–9000	2441–2745	287,000	238,210	200,900	328,000	272,240	229,600
9001–10,000	2746–3045	280,000	232,400	196,000	320,000	265,600	224,000

Table 17. Inputs and Capacities by Altitude in Canada							
Altitude		Normal Input (BTUh)	Thermal Output Capacity (BTUh)	Minimum Input (BTUh)	Normal Input (BTUh)	Thermal Output Capacity (BTUh)	Minimum Input (BTUh)
Feet	Meters						
Unit Size		030			045		
0–2000	0–610	30,000	24,600	30,000	45,000	37,350	45,000
2001–4500	611–1373	27,000	22,140	27,000	40,500	33,615	40,500
Unit Size		060			075		
0–2000	0–610	60,000	49,800	42,000	75,000	62,250	52,500
2001–4500	611–1373	54,000	44,820	37,800	67,500	56,025	47,250
Unit Size		100			125		
0–2000	0–610	105,000	88,200	73,500	120,000	100,800	84,000
2001–4500	611–1373	94,500	79,380	66,150	108,000	90,720	75,600
Unit Size		150			175		
0–2000	0–610	150,000	124,500	105,000	175,000	145,250	122,500
2001–4500	611–1373	135,000	112,050	94,500	157,500	130,725	110,250
Unit Size		200			225		
0–2000	0–610	200,000	166,000	140,000	225,000	186,750	157,500
2001–4500	611–1373	180,000	149,400	126,000	202,500	168,075	141,750
Unit Size		250			300		
0–2000	0–610	250,000	207,500	175,000	300,000	249,000	210,000
2001–4500	611–1373	225,000	186,750	157,500	270,000	224,100	189,000
Unit Size		350			400		
0–2000	0–610	350,000	290,500	245,000	400,000	332,000	280,000
2001–4500	611–1373	315,000	261,450	220,500	360,000	298,800	252,000

Pressure switch replacement

For installations above 6,000 feet (1,830 meters), the pressure switch (see **Figure 20**) must always be replaced before the heater is operated. If ordered with the unit as part of a high-altitude kit (option DJ20 or DJ21), the pressure switch is shipped separately for field-installation. Replace the pressure switch as follows.

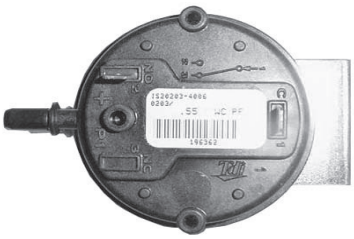

Figure 20. Pressure Switch

1. Locate pressure switch in control compartment (see **Figure 15**) and mark and disconnect two pressure switch wires.
2. Mark and disconnect sensing tube(s) from pressure switch.
3. Remove two screws that secure mounting bracket and remove bracket and pressure switch. Save bracket and screws for reuse.
4. Install replacement pressure switch (refer to replacement parts manual found at **www.reznorhvac.com** for pressure switch PN) using mounting bracket and two screws. Reconnect sensing tube(s) and wires.

MAINTENANCE AND SERVICE

The following section is designed to aid a qualified service person in maintaining and servicing this equipment. This heater will operate with a minimum of maintenance. To ensure long life and satisfactory performance, a heater that is operated under normal conditions should be inspected and cleaned at the start of each heating season. If the heater is operating in an area where an unusual amount of dust or soot or other impurities are present in the air, more frequent maintenance is recommended.

- When any service is completed, ensure that the unit is reassemble correctly so that no unsafe conditions are created.
- When re-lighting, always follow the lighting instructions on the heater.
- Inspect the burner/control compartment annually to determine if cleaning is necessary.

Maintenance Schedule

At a minimum, perform the following annually (see **Figure 15** for component locations):

- ❑ Clean all dirt, lint, and grease from combustion air opening (models APD, UDAP, and UDBP) and venter assembly
- ❑ Clean all dirt, lint, and grease from fan blade, fan guard, and motor
- ❑ Check heat exchanger both internally and externally
- ❑ Check burner for scale, dust, or lint accumulation and clean if needed
- ❑ Check gas valve to ensure that gas flow is being shut off completely
- ❑ Check vent or vent/combustion air system for soundness and clean openings (replace any parts that do not appear sound)

⚠ CAUTION ⚠

If any of the original wire supplied with the appliance must be replaced, it must be replaced with wiring material having a temperature rating of at least 105°C, except for limit control, flame rollout, and sensor lead wires which must be rated at 150°C.

- ❑ Check for any damaged wiring and replace as necessary

Maintenance Procedures

⚠ WARNING ⚠

If you turn OFF the power supply, turn OFF the gas.

NOTE: If replacement parts are required, use only factory-authorized parts.

Heat exchanger maintenance

NOTE: Inspection of the lower portion of the heat exchanger is done with the burner removed. Refer to the Burner maintenance section for information on inspecting the lower portion of the heat exchanger.

- Remove any external dirt or dust accumulation
- Visually inspect heat exchanger for cracks and holes
- If crack or hole is found, replace heat exchanger

Maintenance Procedures—Continued

Burner maintenance

Visually inspect the burner compartment (see **Figure 21**). If there is an accumulation of dirt, dust, and/or lint, clean the compartment and remove and clean the burner as follows.

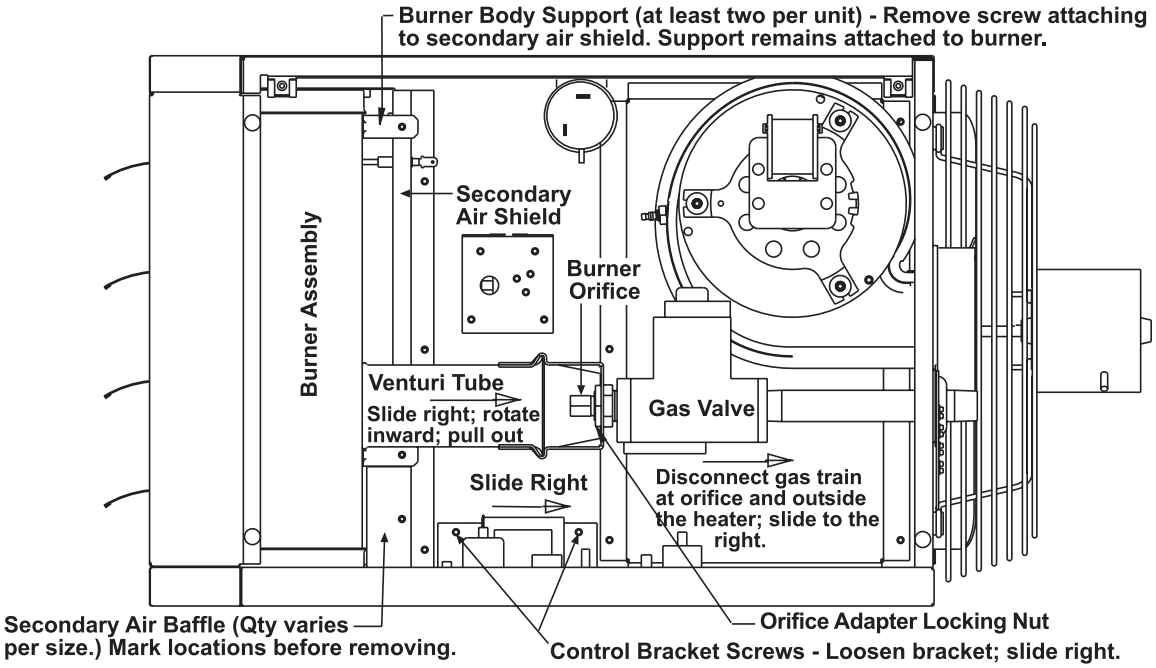

Figure 21. Burner Assembly (Typical View Shown)

⚠ CAUTION ⚠

Use of eye protection is recommended.

Remove burner assembly (see Figure 21):

1. Shut OFF gas supply ahead of union at manual valve outside cabinet.
2. Turn OFF electric supply.
3. Disconnect gas supply at union outside of cabinet.
4. Remove access panel.
5. Detach gas train:
   a. Mark and disconnect wires at gas valve.
   b. Carefully remove burner orifice and orifice adapter locking nut.
   c. Slide orifice adapter out through bracket on burner while pushing gas train to right. This will move gas train out of way.
6. Detach control assembly:
   a. Remove two screws that secure control assembly bracket.
   b. Being careful not to disconnect any wires, slide control assembly to right.
7. Remove secondary air baffle(s) (unit sizes 060–400 only):
   a. Locate flat plate(s) identified as secondary air baffle(s)—vertical along right side of burner. Quantity of baffles could be one to four depending on heater size. Each baffle is held in place by one screw.
   b. For correct re-assembly on secondary air shield, mark location (top and bottom) of each baffle.
   c. Remove screw(s) and remove baffle(s) (all).

8. Locate burner body supports (depending on size, burner will have two or more supports.
9. At each support, remove one screw that secures support to secondary air shield.
10. Holding venturi tube, slide entire burner assembly slightly to right to disengage burner from supports on left.
11. Rotate open end of venturi tube inward toward heater and carefully pull burner assembly out of cabinet.

Inspect and clean burner:

NOTE: If, upon inspection, any of the burner components are damaged or deteriorated, replace the burner assembly.

1. With burner assembly removed, shine flashlight on burner ribbons. Look for carbon buildup, scale, dust, lint, and/or anything that might restrict flow through spaces between burner ribbons.
2. Holding burner assembly so that any foreign material will fall away from burner, use stiff bristle brush to loosen and remove any foreign material(s).
3. If burner is excessively dirty, remove one of burner end caps:
   a. Remove four screws that secure end cap to burner housing.
   b. Lightly tap end cap to remove it.
   c. Clean all foreign material from burner and venturi.
   d. After burner is thoroughly clean, replace end cap, ensuring that it is tight against burner housing.

Inspect lower part of heat exchanger:

1. With burner assembly removed, shine bright light into each heat exchanger section at burner flame entrance of each tube.
2. With light shining into heat exchanger, observe outside for visible light. Repeat for each heat exchanger section.
3. If any light is observed, replace heat exchanger.

Re-install burner assembly (see Figure 21):

1. Attach burner assembly:
   a. Holding venturi tube, slide entire burner assembly into position.
   b. Align supports on left side with slots in burner shield and slide supports into slots.
   c. On right, install screw that secures each burner body support to secondary air shield.
2. Re-install secondary air baffles (unit sizes 060–400 only): install screw that secures each baffle(s). Baffles may be different sizes and each must be installed in correct location as marked.
3. Attach control assembly:
   a. Carefully slide control assembly into position and secure using same screws.
   b. Check to ensure that all wire connections are secure.
4. Attach gas train:
   a. Slide gas train into position so that orifice adapter is slid through bracket on burner.
   b. Secure gas train to bracket using locking nut.
   c. Install gas orifice and reconnect wires to gas valve.
5. Install access panel.
6. Reconnect gas supply at union outside of cabinet.
7. Leak test connection using leak detecting solution. If leak is detected, tighten connection. If leak cannot be stopped by tightening connection, replace part(s).
8. Turn ON electric and gas.
9. Check for proper operation.

Burner orifice maintenance

The burner orifice usually needs to be replaced only when installing a gas conversion kit. When ordering a replacement orifice only, provide BTUh content and specific gravity of gas as well as the model and serial number of the unit. When removing or replacing the burner orifice, take care not to damage the venturi tube and/or the bracket.

Maintenance Procedures—Continued

Ignition system maintenance

- The DSI integrated control module (circuit board, see **Figure 12**) monitors the operation of the heater including ignition. The only replaceable component is the 3-amp Type ATC or ATO fuse (color code: violet, PN 201685). If the fuse is blown, the problem is most likely an external overload. Correct the problem and replace the fuse.
- Do not attempt to disassemble the control module. However, check the lead wires each heating season for insulation deterioration and good connections.
- For the flame sensor (see **Figure 15**), disconnect the wire and remove the screw and the flame sensor. Clean flame sensor with an emery cloth before reinstalling.
- Proper operation of the direct spark ignition system requires a minimum flame signal of 1.0 microamps as measured by a microampmeter.
- For the ignitor (see **Figure 15**), disconnect the wire and remove the screw and ignitor. Clean the ignitor assembly with an emery cloth before reinstalling.

⚠ CAUTION ⚠

Due to high voltage on the spark wire and electrode, do not touch when energized.

- The spark gap (see **Figure 22**) must be maintained to 1/8 inch.

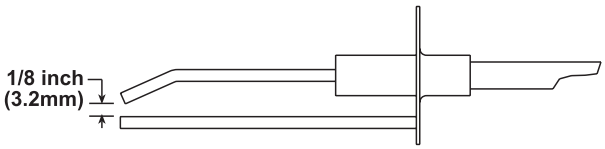

Figure 22. Ignitor Spark Gap

Maintenance of fan motor, fan blades, and guard

Inspection and cleaning: remove dirt and grease from the motor, fan guard, and blades. Take care when cleaning the fan blades so as prevent causing misalignment or imbalance. Check to ensure that the hub of the fan blades is secure to the shaft.

Replacement: as follows:

1. If heater has been installed, turn OFF gas and disconnect electric power.
2. Remove access panel and disconnect fan motor wires, capacitor wires at capacitor, and ground screw.
3. Remove assembled parts (fan guard, motor, and fan blade).
4. Disassemble and replace part(s) as needed.
5. Reassemble using replacement part(s) as needed and original parts.
6. Ensure that fan blade is in proper position on shaft (see **Figure 23**) and that bldes are properly spaced (refer to **Table 18**).
7. Position assembly on heater and attach fan guard.
8. Rotate fan blade to check for adequate clearance. If adjustment is required, loosen mounting screws, reposition fan guard, and tighten screws. Repeat until assembly is positioned properly.
9. Reconnect fan motor wires in accordance with wiring diagram.
10. Install access panel.
11. Restore electric power to heater and turn ON gas.
12. Follow instructions on lighting instruction plate to light heater.
13. Check for proper heater operation.

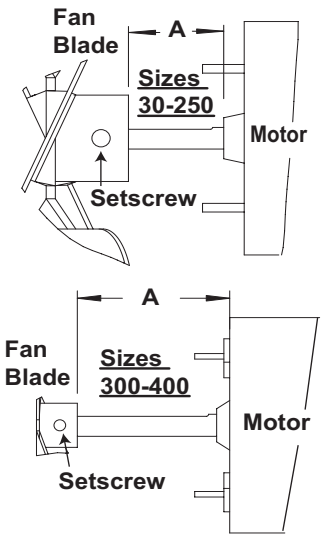

Figure 23. Fan Blade Positioning and Spacing

Table 18. Fan Blade Spacing

Unit Size	Dimension A*				Setscrew Torque (Inch-Pounds (±10))
	Standard Wire Fan Guard with 0.5 Inch (13 mm) Spacing		Option AZ8 Wire Fan Guard with 0.334 Inch (8.5 mm) Spacing		
	Inches	Millimeters	Inches	Millimeters	
030	1	25	1	25	80
045	9/16	14	1-1/16	27	
0-LN	3/4	19	—		
060	1-1/2	38	1-3/4	44	
075	2-1/8	54	1-1/2	38	
100	2-3/8	60	2-3/8	60	120
125	2-5/16	59	2-1/8	54	
150	2-3/8	60	—		130
175	2-1/8	54			
200	1-5/8	41			
225, 250, 300	2	51			
350	1-7/8	48			
400	1-3/8	35			

*See Figure 23.

Maintenance of venter motor and wheel assembly

Inspection and cleaning: remove dirt and grease from the motor casing, venter housing, and venter wheel. Venter motor bearings are permanently lubricated.

Replacement: as follows:

NOTE: Keep all hardware removed to be used in reassembling and installing the replacement parts.

1. Turn OFF gas and disconnect electric power.
2. Remove burner/control compartment access panel.
3. Disconnect three venter motor wires at DSI control, capacitor wires at capacitor (if applicable), and ground screw (located on control panel).
4. Detach gas train: (unit sizes 030 and 045 only):
   a. Disconnect gas supply at union outside of cabinet.
   b. Mark and disconnect wires at gas valve.
   c. Carefully remove burner orifice and orifice adapter locking nut.
   d. Slide orifice adapter out through bracket on burner while pushing gas train to right. This will move gas train out of way.

Maintenance Procedures—Continued

Maintenance of venter motor and wheel assembly—continued

5. While holding venter motor, remove three or four screws that secure venter motor mounting plate to venter housing. Remove motor and wheel assembly from heater.
6. Reassemble with replacement venter motor and wheel. Ensure that venter wheel is properly positioned on shaft (see **Figure 24**).
7. Reconnect venter wires in accordance with wiring diagram.
8. For unit sizes 030 and 045, reconnect gas supply at union outside of cabinet.
9. Leak test connection using leak detecting solution. If leak is detected, tighten connection. If leak cannot be stopped by tightening connection, replace part(s).
10. Install access panel.
11. Restore electric power to heater and turn ON gas.
12. Follow instructions on lighting instruction plate to light heater.
13. Check for proper heater operation.

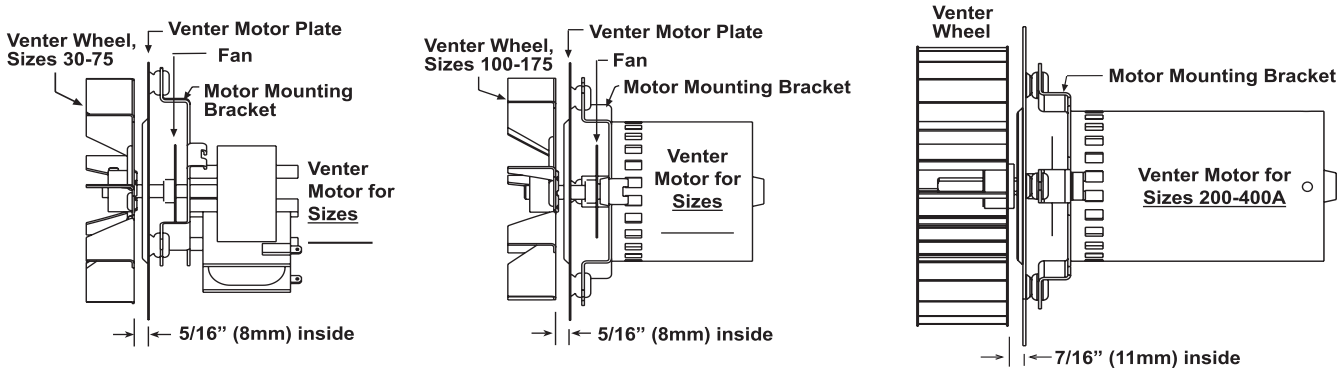

Figure 24. Venter Wheel Position on Shaft

Operating gas valve maintenance

⚠ WARNING ⚠

The operating gas valve is the prime safety shutoff. All gas supply lines must be free of dirt or scale before connecting to the unit to ensure positive closure.

Inspection and cleaning: carefully remove external dirt accumulation and check wiring connections.

Annual operation check: to ensure that the valve is shutting off gas flow completely, it must be checked annually as follows:

1. Turn manual valve OFF to prevent flow to gas valve.

NOTE: A manometer (fluid-filled gauge) is recommended rather than a spring-type gauge due to the difficulty of maintaining the calibration of a spring-type gauge. Use a water column manometer that is readable to the nearest tenth of an inch.

2. Connect manometer to 1/8-inch output pressure tap on valve (see **Figure 19**).
3. Turn manual valve ON and heater OFF.
4. Use finger to fully block main burner orifice for several seconds.
5. Observe manometer with orifice blocked. If ***any*** pressure is indicated, gas valve is leaking.
6. Replace leaking gas valve before heater is restored to operation.

Pressure (combustion air) switch maintenance

If it is determined that the pressure switch (see **Figure 20**) needs replacing, use only the factory-authorized replacement part that is designed for the model and size of heater being serviced. Replace the switch in accordance with the **Pressure switch replacement** section.

NOTES:

- **Depending on the date of manufacture and unit size, the pressure switch may not be in the location indicated. Check the control bracket on the bottom of the compartment or further down on the compartment wall.**
- **A unit operating above 6,000 feet (1,830 meters) in elevation requires a high-altitude pressure switch (refer to Pressure switch replacement section).**

Limit control maintenance

If it is determined that the limit control (see **Figure 25**) needs replacing, use only a factory-authorized replacement part that is designed for the size of heater. For the approximate limit control location, see **Figure 15**.

Limit Control	**Flame Rollout Switch (Unit Sizes 030–125 Only**	
Door Switch (Models UDAS and UDBS Only)	**Transformer**	**Disconnect Switch (Models UDAS and UDBS Only)**

Figure 25. Replaceable Components

Flame rollout switch maintenance (unit sizes 030–125 only)

The cause of a flame rollout switch (see **Figure 25**) activating must be determined. See **Figure 15** for flame rollout switch location. Activation of the manually-reset flame rollout switch could be caused by one or more of the following:

- Restricted or plugged heat exchanger
- Too much building exhaust
- Manifold gas pressure too high
- Restricted combustion air inlet or exhaust outlet in combination with defective pressure switch
- Electrical power interruption during operation
- Unit being operated with line voltage disconnect (24-volt thermostat is required)

If a flame rollout switch trips, inspect the burner/control compartment for signs of excessive heat and burned wiring. If there is damage to the control compartment, repairs must be made before resetting the switch.

If the compartment appears normal, reset by depressing the red button on the switch (15 to 20 minutes are required for the switch to cool sufficiently before resetting). A distinct click will be felt when the switch resets. Operate the furnace. If the flame rollout switch trips again, determine and correct the cause before resetting the switch.

If it is determined that the flame rollout switch needs replacing, use only the factory-authorized replacement part that is designed for that size of heater. The disconnect switch is located in the sealed electrical box inside the control compartment with the toggle on the rear of the heater.

Maintenance Procedures—Continued

Interlock door switch maintenance (models UDAS and UDBS only)

If it is determined that the interlock door switch (see **Figure 25)** needs replacing, use only a factory-authorized replacement part that is designed for the heater. For the approximate door switch location, see **Figure 15**.

Transformer maintenance

Use a voltmeter to verify that there are 24 volts output from the transformer (see **Figure 25**). If the transformer is not functioning, it must be replaced. Use a replacement transformer identical to the factory-installed model. For the transformer location, see **Figure 15**.

Disconnect switch (models UDAS and UDBS only)

If it is determined that the disconnect switch (see **Figure 25**) needs replacing, use only the factory-authorized replacement part that is designed for the heater. Always replace the electrical box cover.

Vent or vent/combustion air system maintenance

Check the complete system at least once a year. Inspection should include all joints, seams, concentric adapter box (models UDAS and UDBS), inlet air guard or inlet air cap (models UDAS and UDBS), and the vent terminal cap. Clean all openings and replace any defective parts.

TROUBLESHOOTING

Unit Troubleshooting Using DSI Control Module

The LEDs on the DSI control module (circuit board) may be used to troubleshoot the unit. The circuit board monitors the operation of the heater, and the LEDs indicate normal operation and various abnormal conditions. If the heater fails to operate properly, check this signal to determine the cause and/or to eliminate certain causes. The LEDs are visible through the viewport on models UDAS and UDBS. Remove the access panel on models APD, UDAP, and UDBP. Refer to **Table 11** for the DSI control module flash codes and their indications. See **Figure 26** for a flowchart for troubleshooting the unit using the DSI control module.

NOTES:

- **If troubleshooting indicates that repair of the DSI control board is required, note that its only replaceable part is the fuse (see Figure 12), which is a type ATC or ATO 3-amp fuse, color code violet, PN 201685.**
- **IMPORTANT: When using a multimeter to troubleshoot the 24V circuit, place the multimeter's test leads into the 5- or 9-pin connectors located on the ignition control. Do not remove connectors or terminals from the electrical components. Doing so can result in misinterpreted readings caused by the ignition control board's fault mode monitoring circuits.**

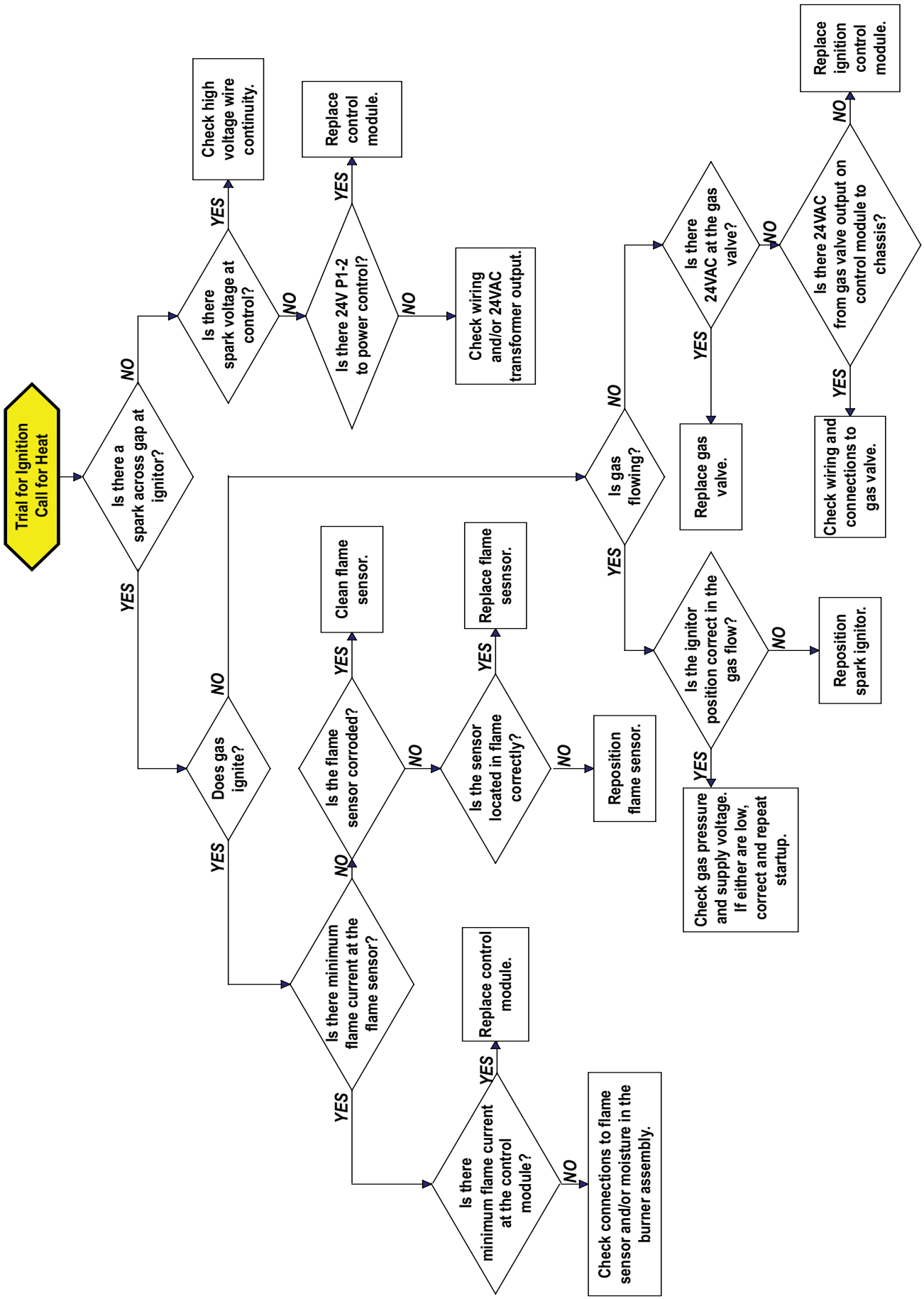

Figure 26. DSI Control Module Troubleshooting Flowchart

General Troubleshooting

Refer to **Table 19** for general troubleshooting symptoms, probable causes, and remedies.

Table 19. General Troubleshooting

Symptom	Probable Cause	Remedy
Venter motor will not start	1. No power to unit	Turn ON power and check supply fuses or circuit breaker
	2. No 24-volt power to integrated circuit board	Turn up thermostat
		Check control transformer output
	3. Integrated circuit board fuse blown	Correct cause and replace fuse (3A, type ATC or ATO, 32VDC)
	4. No power to venter motor	Tighten connections at circuit board and/or motor terminals
	5. Integrated circuit board defective	Replace integrated circuit board
	6. Defective venter motor	Replace venter motor (refer to **Maintenance of venter motor and wheel assembly** section)
Burner will not light	1. Manual valve not open	Open manual valve
	2. Air in the gas line	Bleed gas line (initial startup only)
	3. Gas pressure too high or too low	Supply pressure should be 5–14 IN WC for natural gas or 11–14 IN WC for propane
	4. No spark	Perform following:
	a. Loose wire connections	Ensure that all wire connections are solid
	b. Transformer failure	Ensure that 24-volt power is available
	c. Incorrect spark gap	Maintain spark gap at 1/8 inch
	d. Spark cable shorted to ground	Replace worn or grounded spark cable
	e. Spark electrode shorted to ground	Replace ceramic spark electrode if it is cracked or grounded
	f. Burner not grounded	Ensure that integrated circuit board is grounded (terminals P1–9)
	g. Circuit board not grounded	Ensure that integrated circuit board is grounded to furnace chassis
	h. Unit not properly grounded	Ensure that unit is properly field grounded to earth ground and properly phased (L1 to hot lead L2 to neutral)
	i. Integrated circuit board fuse blown	Correct cause and replace fuse (3A, type ATC or ATO, 32VDC)
	j. Faulty integrated circuit board	If 24-volt power is available to integrated circuit board and all other causes have been eliminated, replace board
	5. Lockout device interrupting control circuit by above causes	Reset lockout by interrupting control at thermostat or main power
	6. Combustion air proving switch not closing	Perform following:
		Ensure that unit is properly vented
		Remove obstruction(s) from vent
		Replace faulty tubing to pressure switch
	7. Faulty combustion air proving switch	Replace combustion air proving switch
	8. Main valve not operating	Perform following:
	a) Defective valve	If 24-volt power is measured at valve connections and valve remains closed, replace valve
	b) Loose wire connections	Check and tighten all wiring connections
	9. Integrated circuit board does not power main valve	Perform following:
	a) Loose wire connections	Ensure that all wire connections are solid
	b) Flame sensor grounded	Ensure that flame sensor lead is not grounded or that sensor insulation or ceramic is not cracked—replace as required
	c) Incorrect gas pressure	Supply pressure should be 5–14 IN WC for natural gas or 11–14 IN WC for propane
	d) Cracked ceramic at sensor	Replace sensor

Table 19. General Troubleshooting—Continued		
Symptom	**Probable Cause**	**Remedy**
Burner cycles ON and OFF	1. Gas pressure too high or too low	Supply pressure should be 5–14 IN WC for natural gas or 11–14 IN WC for propane
	2. Burner not grounded	Ensure that integrated circuit board is grounded (terminals P1–9)
	3. Circuit board not grounded	Ensure that integrated circuit board is grounded to furnace chassis
	4. Faulty integrated circuit board	If 24-volt power is available to integrated circuit board and all other causes have been eliminated, replace board
	5. Combustion air proving switch not closing	Perform following:
		Ensure that unit is properly vented
		Remove obstruction(s) from vent
		Replace faulty tubing to pressure switch
	6. Faulty combustion air proving switch	Replace combustion air proving switch
	7. Flame sensor grounded	Ensure that flame sensor lead is not grounded or that sensor insulation or ceramic is not cracked—replace as required
	8. Cracked ceramic at sensor	Replace sensor
	9. Incorrect polarity	Reverse line volt leads to integrated circuit board
	10. Pin terminal loose on 9 pin plug	Replace wire harness
No heat (heater operating)	1. Incorrect valve outlet pressure or orifice	Check valve outlet pressure (refer to unit rating plate for manifold pressure)
	2. Cycling on limit control	Check air throughput
	3. Improper thermostat location or adjustment	Refer to thermostat manufacturer's instructions
Fan or venter motor will not run	1. Circuit open	Check wiring and connections
	2. Defective integrated circuit board	Replace board
	3. Defective motor or starter	Replace motor or starter
Fan or venter motor turns ON and OFF while burner is operating	1. Motor overload device cycling ON and OFF	Check motor load against motor rating plate—replace motor if needed
Fan or venter motor cuts out on overload	1. Low or high voltage supply	Correct electric supply
	2. Defective motor	Replace motor
	3. Poor airflow	Clean motor, fan, fan guard, filter, and coils

APPENDIX: TECHNICAL DATA

The data in the following tables applies to all models unless otherwise indicated.

Technical Data (Unit Sizes 030–125)							
Parameter	**Unit of Measurement**	**Unit Size**					
		030	**045**	**060**	**075**	**100**	**125**
Input heating capacity	BTUh	30,000	45,000	60,000	75,000	105,000	120,000
	kW	8.8	13.2	17.6	22.0	30.8	35.2
Thermal efficiency	%	82	83				
Output heating capacity[1]	BTUh	24,600	37,350	49,800	62,250	87,150	99,600
	kW	7.2	11.0	14.6	18.3	25.6	29.2
Gas connection, natural[2]	Inches	1/2					
Gas connection, propane[2]							
Vent connection diameter[3]		4					
Combustion air inlet diameter (models UDAS and UDBS only[3]							
Control amps (24-volt)	Amps	1.0					
Full Load amps (115-volt)		1.9	2.4		3.3	3.9	5.1
Maximum overcurrent protection (standard 115V)[4,5]		15					
Maximum overcurrent protection (optional 208V or 230V)[4,5]							
Normal power consumption	Watts	109	155		217	276	354
Discharge air temperature rise	°F	50	55	60			
Air volume	cfm	456	629	769	961	1345	1537
	M^3/minute	12.9	17.8	21.8	27.5	36.7	45.9
Discharge air opening area	$Feet^2$	1.0		1.2		2.0	
	M^2	0.1				0.2	
Output velocity	FPM	475	656	616	770	668	763
	M/minute	145	200	188	238	196	245
Standard open fan motor[5]	Horsepower	0.0			0.1	1/30	1/20
Optional enclosed fan motor[5]		—				1/4	
Fan motor	rpm	1550				1050	
Fan diameter	Inches	10		12		16	
Sound level @ 15 feet	dba	40			49	54	55
[1]CSA ratings for altitudes up to 2,000 feet.							
[2]Size shown is for gas connection to a single-stage gas valve—not supply line size.							
[3]Smaller and/or larger vent and combustion air pipe diameters may be permissible. Refer to appropriate venting instructions.							
[4]MOCP = 2.25 × (largest motor FLA) + smallest motor FLA. Answer is rounded to the next lower standard circuit breaker size.							
[5]Except where indicated, information in this table is based on a heater equipped with a standard 115-volt open fan motor.							

Technical Data (Unit Sizes 150–400)									
Parameter	**Unit of Measurement**	**Unit Size**							
		150	**175**	**200**	**225**	**250**	**300**	**350**	**400**
Input heating capacity	BTUh	150,000	175,000	200,000	225,000	250,000	300,000	350,000	400,000
	kW	43.9	51.2	58.6	65.9	73.2	87.8	102.5	117.1
Thermal efficiency	%	83							
Output heating capacity[1]	BTUh	124,500	145,250	166,000	186,750	207,500	249,000	290,500	332,000
	kW	36.4	42.5	48.6	54.7	60.8	72.9	85.1	97.2
Gas connection, natural[2]	Inches	1/2			3/4				
Gas connection, propane[2]									
Vent connection diameter[3]		5					6		
Combustion air inlet diameter (models UDAS and UDBS only[3]		6							
Control amps (24-volt)	Amps	1.0							
Full Load amps (115-volt)		3.8		7.5			10.7		
Maximum overcurrent protection (standard 115V)[4,5]		15					20		
Maximum overcurrent protection (optional 208V or 230V)[4,5]		15							
Normal power consumption	Watts	392		491	747		1086		
Discharge air temperature rise	°F	60							
Air volume	cfm	1921	2242	2562	2882	3202	3843	4483	5123
	M^3/minute	54.4	63.5	72.5	81.6	90.7	108.8	126.9	145.1
Discharge air opening area	$Feet^2$	2.6			3.5		4.8		
	M^2	0.2			0.3		0.5		
Output velocity	FPM	752	877	1003	820	911	802	936	1069
	M/minute	229	267	306	250	278	244	285	326
Standard open fan motor[5]	Horsepower	1/6		1/4			1/2		
Optional enclosed fan motor[5]		1/4							
Fan motor	rpm	1050							
Fan diameter	Inches	18			20		24		
Sound level @ 15 feet	dba	51	52	53	56		59	61	62

[1]CSA ratings for altitudes up to 2,000 feet.

[2]Size shown is for gas connection to a single-stage gas valve—not supply line size.

[3]Smaller and/or larger vent and combustion air pipe diameters may be permissible. Refer to appropriate venting instructions.

[4]MOCP = 2.25 × (largest motor FLA) + smallest motor FLA. Answer is rounded to the next lower standard circuit breaker size.

[5]Except where indicated, information in this table is based on a heater equipped with a standard 115-volt open fan motor.

INSTALLATION RECORD (TO BE COMPLETED BY INSTALLER)

Model	Serial No.	Date of Installation	Notes
	Installer	Distributor	
Name			
Company			
Address			
Phone No.			

For more information on Reznor HVAC products:

- **Contact your local Reznor representative at 1-800-695-1901**
- **Refer to the technical specifications, manuals, and consumer materials found at www.reznorhvac.com**

Specifications and illustrations subject to change without notice or incurring obligations.
Latest version of this manual is available at **www.reznorhvac.com**.
©2026 Reznor LLC, Saint Charles, MO. All rights reserved.
UD-APD-IOM (05-26) 195673-A