REZNOR®

Revision: X-TSL (10-26) REV-G

Supersedes: X-TSL (07-25) REV-F

TECHNICAL SPECIFICATIONS FOR MODEL X

INDOOR COMMERCIAL/INDUSTRIAL GRAVITY-VENTED GAS-FIRED DUCT FURNACE



Table of Contents

Unit Sizes . . . 2
Features . . . 2
Factory-Installed Options . . . 2
Field-Installed Options . . . 3
Technical Data . . . 3
Certification . . . 4
Installation Codes . . . 4
Unit Location . . . 4
Combustion Air Requirements . . . 4
Halogenated Hydrocarbons . . . 4
Venting Requirements . . . 5
Ductwork Requirements . . . 5
Clearances . . . 5
Dimensions . . . 6
Weights . . . 7
Duct Furnace Airflow . . . 7
Gas Supply Pressure . . . 7
Gas Supply Piping . . . 8

In keeping with our policy of continuous product improvement, we reserve the right to alter, at any time, the design, construction, dimensions, weights, etc., of equipment information shown here.

TECHNICAL SPECIFICATIONS—CONTINUED

Unit Sizes

These duct furnaces are available in eleven unit sizes based on 75,000–400,000 BTUh input.

Features

- Voltage/phase/Hz options: 115/1/60, 208/1/60, 230/1/60, and 460/1/60
- Natural gas or propane
- 80% thermal efficient
- Intermittent spark pilot
- Corrosion-resistant Galvalume® cabinet
- Aluminized-steel burner with SST insert
- Thermocore® aluminized-steel heat exchanger with venturi tubes (SST heat exchanger recommended for air inlet temperature or temperature rise <40°F)
- Fan control, high limit safety control, and blocked vent safety limit
- 24V control transformer (designed for field-connection to 24V thermostat for automatic operation)

Factory-Installed Options

Option	Description
AA1	Natural gas
AA2	Propane
AB1	Installation elevation of 0–2000 feet
AB2	Installation elevation of 2001–3000 feet
AB3	Installation elevation of 3001–4000 feet
AB4	Installation elevation of 4001–5000 feet
AB5	Installation elevation of 5001–6000 feet
AB6	Installation elevation of 6001–7000 feet
AC1	Aluminized-steel heat exchanger
AC2	409 SST heat exchanger
AD1	Aluminized-steel burner
AD2	409 SST burner
AE1	No burner air shutters
AE2	Burner air shutters (required on propane units)
AF1	Aluminized-steel drip pan/bottom panel
AF2	409 SST drip pan/bottom panel
AGA	US installation rating plate
AG1	Single-stage combination gas valve
AG2	Two-stage combination gas valve
AG3	Two-stage combination gas valve with unit-mounted ductstat
AG8	Electronic modulation with 2:1 turndown ratio and ductstat
AG15	Two-stage combination gas valve with electronic ductstat and remote temperature selector
AG21	Electronic modulation with Maxitrol signal conditioner and gas regulator
AH2	Intermittent spark pilot (not available on propane units)
AH3	Intermittent spark pilot with timed lockout
AJ1	Left side controls (facing airstream)
AJ2	Right side controls (facing airstream)
AK1	115/1/60 voltage
AK2	208/1/60 voltage
AK3	230/1/60 voltage
AK9	460/1/60 voltage
BG3A–BG3Z	Various relay options
BW1	Air flow pressure proving switch
CGA	Canadian installation rating plate and vent cap

Field-Installed Options

Option	Description
AG7	Electronic modulation with room thermostat
AG9	Electronic modulation with 2:1 turndown ratio and remote temperature selector
CA1	Power vent kit, 115/1/60
CA2	Power vent kit, 208/1/60
CA3	Power vent kit, 230/1/60
CE1	Manual shutoff valve, natural gas
CE2	Manual shutoff valve, propane
CL1	Single-stage thermostat
CL9	Electronic modulating room override
CL22	Two-stage thermostat
CL33	Two-stage digital thermostat
CL52	Single-stage digital thermostat
CM1	Locking thermostat cover
CM1B	Large locking thermostat cover
CN1A–CN3Z	Various remote switch options
CP2, CP3, CP4, CP41, CP58	Disconnect switches
CS1	Condensate drain flange kit

Technical Data

Parameter	Unit of Measure	Unit Size (MBTUh)										
		75	100	125	150	175	200	225	250	300	350	400
Input heating capacity	BTUh	75,000	100,000	125,000	150,000	175,000	200,000	225,000	250,000	300,000	350,000	400,000
	kW	22.0	29.3	36.6	44.0	51.3	58.6	65.9	73.3	87.9	102.6	117.2
Output heating capacity (80%)	BTUh	60,000	80,000	100,000	120,000	140,000	160,000	180,000	200,000	240,000	280,000	320,000
	kW	17.6	23.4	29.3	35.2	41.0	46.9	52.8	58.6	70.3	82.1	93.8
Air volume with finger-baffles	CFM	610–1105	815–1475	1020–1840	1225–2210	1430–2580	1635–2945	1840–3315	2045–3685	2455–4420	2865–5160	3275–5895
	meter^3/hr	1036–1877	1385–2506	1733–3126	2081–3755	2429–4383	2778–5003	3126–5632	3474–6261	4171–7509	4867–8767	5564–10,015
Air volume without finger-baffles*	CFM	735–2765	980–3685	1225–4605	1475–5530	1720–6450	1965–7370	2210–8295	2455–9215	2945–11,060	3440–12,900	3930–14,745
	meter^3/hr	1249–4698	1665–6261	2081–7824	2506–9395	2922–10,958	3338–12,521	3755–14,093	4171–15,656	5003–18,790	5844–21,916	6677–25,051

*High CFM conversion requires removal of the finger baffles. This conversion shall be done by a qualified service agency in accordance with the manufacturer's instructions and all applicable codes and requirements of the authority having jurisdiction.

Parameter	Unit of Measure	Unit Size (MBTUh)							
		75	100	125	150, 175	200, 225	250	300	350, 400
Flue diameter (and shape)	inch	5 (round)	6 (round)	7 (oval)	8 (oval)	8 (round)	10 (oval)		12 (oval)
Gas connection, natural gas		1/2						3/4	
Gas connection, propane		1/2							
Temperature rise	°F	50–90							
		20–75							
Full load amps (115V)	amp	0.2							
Unit control amps (24V)		0.3							

Certification

The duct furnaces covered in this manual are design-certified by the Canadian Standards Association to ANSI Z83.8a and CSA 2.6 for use with either natural or propane gas. The type of gas for which the furnace is equipped and the correct firing rate are shown on the rating plate attached to the unit. Electrical characteristics are shown on the unit rating plate.

Installation Codes

- These units must be installed in accordance with local building codes. In the absence of local codes, in the United States, the unit must be installed in accordance with the *National Fuel Gas Code* (ANSI Z223.1, latest edition). A Canadian installation must be in accordance with the *Natural Gas and Propane Installation Code* (CSA B149, latest edition). This code is available from CSA Information Services, 1-800-463-6727. Local authorities having jurisdiction should be consulted before installation is made to verify local codes and installation procedure requirements.
- Installations in aircraft hangars should be in accordance with the *Standard for Aircraft Hangars* (ANSI/NFPA 409, latest edition). Installations in public garages should be in accordance with the *Standard for Parking Structures* (ANSI/NFPA 88A, latest edition). Installations in repair garages should be in accordance with the *Standard for Repair Garages* (NFPA 88B), which has been incorporated into the *Code for Motor Fuel Dispensing Facilities and Repair Garages* (NFPA 30A, latest edition). In Canada, installations in aircraft hangars and public garages should be in accordance with CSA B149.
- If the heater is being installed in the Commonwealth of Massachusetts, installation must be performed by a licensed plumber or licensed gas fitter.

Unit Location

⚠ WARNING ⚠

Avoid installing a furnace in extremely drafty areas. Extreme drafts can shorten the life of the heat exchanger and/or cause safety problems.

- A duct furnace is designed for connection to an inlet and an outlet duct and depends on an external air handler. Location must be in accordance with **Clearances** section.
- There are a variety of factors such as system application, building structure, dimensions, and weight that contribute to selecting the location. Read the installation information in this manual and select a location that complies with the requirements.

Combustion Air Requirements

⚠ WARNING ⚠

The unit is designed to take combustion air from the space in which it is installed and is not designed for connection to an outside combustion air intake duct. Connecting this furnace to an outside combustion air intake duct voids the warranty and could cause hazardous operation.

- Requirements for combustion air and ventilation air depend upon whether the unit is located in a confined or unconfined space. A ***confined*** space is defined as a space whose volume is <50 cubic feet per 1,000 BTUh of the installed appliance input rating. An ***unconfined*** space is defined as a space whose volume is ≥50 cubic feet per 1,000 BTUh of the installed appliance input rating.
- Sufficient air must enter the equipment location to replace the air exhausted through the vent system. Refer to the installation, operation, and maintenance manual provided with the unit for further information on confined spaces and combustion air requirements.

Halogenated Hydrocarbons

Halogenated hydrocarbons are a family of chemical compounds characterized by the presence of halogen elements (fluorine, chlorine, bromine, etc.). These compounds are used in refrigerants, cleaning agents, and solvents and are heavier than air, a fact that should be kept in mind when determining the installation location of heaters and building exhaust systems.

⚠ CAUTION ⚠

CORROSION HAZARD: Halogenated hydrocarbons, when exposed to flame, precipitate with any condensation present in the heater to form hydrochloric acid, which readily attacks all metals, including 300 grade stainless steel. Care should be taken to separate these vapors from the combustion process. An outside air supply MUST BE provided to the burner whenever the presence of these compounds is suspected.

Venting Requirements

- Safe operation of any gas-fired equipment requires a properly operating vent system, correct provision for combustion air, and regular maintenance and inspection.
- Install the vent in accordance with *Part 7, Venting of Equipment*, of the *National Fuel Gas Code* (ANSI Z223.1, latest edition) or an applicable provision of national, state, or local codes. A Canadian installation must be in accordance with the *Installation Code for Gas Burning Appliances and Equipment* (CSA B149.1) and applicable local codes.
- Refer to the installation, operation, and maintenance manual provided with the unit for further information on venting requirements.

Vent Configuration	Vent Pipe Diameter (Inches)	Vertical Height of Vent (Feet (Meters))					
		6 (1.8)	8 (2.4)	10 (3.0)	15 (4.6)	20 (6.1)	30 (9.1)
		Maximum Horizontal Run (Feet (Meters))					
Double-wall type B connector and double-wall type B vent	5	6 (1.8)	8 (2.4)	10 (3.0)	16 (4.9)	20 (6.1)	20 (6.1)
	6			16 (4.9)		30 (9.1)	40 (12.2)
	7 or 8	6 (1.8)	16 (4.9)	20 (6.1)	30 (9.1)	30 (9.1)	40 (12.2)
	10 or 12						
Single-wall metal pipe	5	2 (0.6)	5 (1.5)	5 (1.5)	5 (1.5)	—	—
	6			10 (3.0)	10 (3.0)	10 (3.0)	
	7	2 (0.6)	10 (3.0)	15 (4.6)	15 (4.6)	15 (4.6)	
	8, 9, 10, or 12				20 (6.1)	20 (6.1)	

Ductwork Requirements

⚠ CAUTION ⚠

- **Joints where ducts attach to furnace must be sealed securely to prevent air leakage into draft hood or burner rack area. Leakage can cause poor combustion, poor performance, and pilot problems and can shorten heat exchanger life.**
- **IMPORTANT: A minimum horizontal duct length of 18 inches (457 mm) is required at the furnace discharge before any vertical rise is made in front of the draft hood relief opening. This is required to prevent interference with the built-in draft hood.**

Refer to the installation, operation, and maintenance manual provided with the unit for further information on ductwork requirements.

Clearances

The unit must be installed so that clearances are provided for combustion air space, for convenient installation and burner control service, and for proper spacing from combustible construction. Clearance to combustibles is defined as the necessary minimum distance from the heater to a surface or object that ensures that a surface temperature does not exceed 90°F (50°C) above the surrounding ambient temperature. Units must be installed so that clearances are as follows:

Unit Surface	Minimum Clearance (Inches (mm))
Top	6 (152)
Control side	6 (152) + width of furnace*
Side opposite controls	6 (152)
Bottom, to combustibles	3 (76)
Bottom, to noncombustibles	0 (0)
*To have sufficient space to remove the drawer-type burner rack.	

TECHNICAL SPECIFICATIONS—CONTINUED

Dimensions

NOTES:

Inches (mm)

Standard airflow may be reversed by changing direction of heat exchanger air baffles.

Burner and control access shown left-hand side. Specify right-hand side for opposite access and connections.

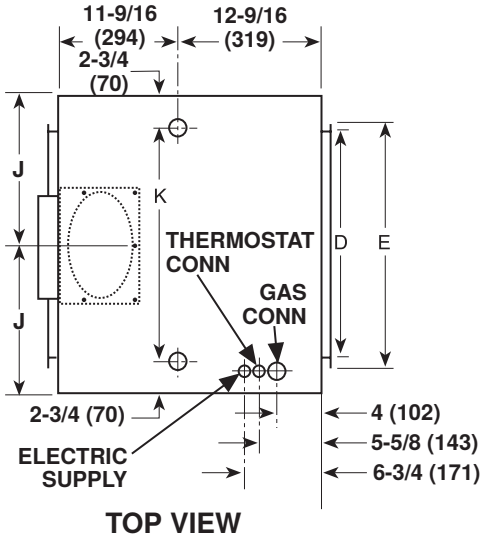

TOP VIEW

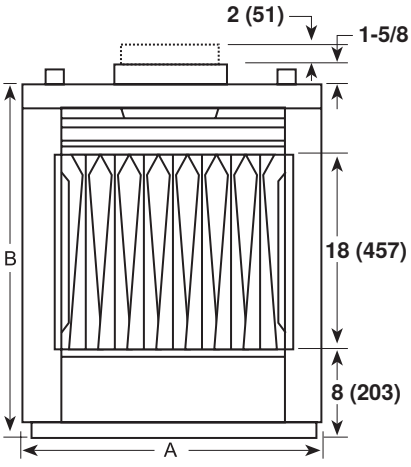

FRONT VIEW

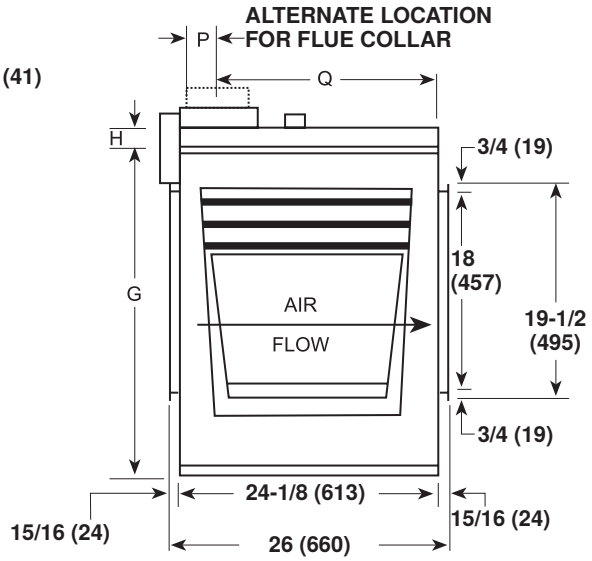

SIDE VIEW

Dimension (See Graphic above)	Unit Size (MBTUh)						
	75, 100	125	150, 175	200, 225	250, 300	350	400
	Inches (mm)						
A	19-1/4 (489)	22 (559)	27-1/2 (699)	33 (838)	41-1/4 (1048)	46-3/4 (1188)	52-1/4 (1327)
B	32-1/4 (819)			35-1/4 (895)			
D	12-1/2 (318)	15-1/4 (387)	20-3/4 (527)	26-1/4 (667)	34-1/2 (876)	40 (1016)	45-1/2 (1156)
E	14 (356)	16-3/4 (425)	22-1/4 (565)	27-3/4 (705)	36 (914)	41-1/2 (1054)	47 (1194)
G	30-1/4 (768)			31-3/4 (806)			
H	2 (51)			3-1/2 (89)			
J	9-5/8 (244)	11 (279)	13-3/4 (349)	16-1/2 (419)	20-5/8 (524)	23-3/8 (594)	26-1/8 (664)
K	13-3/4 (349)	16-1/2 (419)	22 (559)	27-1/2 (699)	35-3/4 (908)	41-1/4 (1048)	46-3/4 (1187)
P	3-1/2 (89)			5 (127)			
Q	20-3/4 (527)			19-1/4 (489)			

Weights

Type	Unit Size (MBTUh)									
	75, 100	125	150	175	200	225	250	300	350	400
	Pounds (kg)									
Unit	150 (68)	163 (74)	182 (83)	186 (84)	224 (102)	231 (105)	276 (125)	286 (130)	320 (145)	355 (161)
Shipping	170 (77)	200 (91)	220 (100)	230 (104)	275 (125)	290 (132)	350 (159)	360 (163)	390 (177)	420 (191)

Duct Furnace Airflow

- The duct furnace must be installed on the positive pressure side of the field-supplied blower.
- The air distribution must be even over the entire heat exchanger. Turning vanes should be employed in elbows or turns in the air inlet to ensure proper air distribution.
- The air throughput must be within the CFM range stated on the heater rating plate.
- If it is determined that the blower CFM is greater than allowed or desirable, refer to the installation manual for determining the correct size of bypass duct required or for instructions on converting the furnace for a higher CFM application.
- To determine temperature rise, the inlet and outlet air temperatures should be measured at points not affected by heat radiating from the heat exchanger. The following table lists the approved temperature rise range with the required CFM and the internal pressure drop for each size of unit.

Temperature Rise	Unit Size (MBTUh)										
	75	100	125	150	175	200	225	250	300	350	400
	CFM/Pressure Drop (IN WC)										
80% Thermal Efficient											
50°F	1105/0.23	1475/0.43	1840/0.50	2210/0.38	2580/0.52	2945/0.42	3315/0.53	3685/0.40	4420/0.58	5160/0.65	5895/0.67
60°F	920/0.15	1225/0.29	1535/0.33	1840/0.26	2150/0.35	2455/0.28	2765/0.36	3070/0.28	3685/0.39	4300/0.44	4915/0.45
70°F	790/0.10	1050/0.21	1315/0.25	1580/0.19	1840/0.26	2105/0.22	2370/0.27	2630/0.23	3160/0.29	3685/0.31	4210/0.32
80°F	690/0.06	920/0.15	1150/0.21	1380/0.15	1610/0.19	1840/0.17	2070/0.22	2300/0.22	2765/0.25	3225/0.25	3685/0.25
90°F	610/0.04	815/0.11	1020/0.18	1225/0.12	1430/0.16	1635/0.14	1840/0.17	2045/0.21	2455/0.22	2865/0.23	3275/0.19
With Finger Baffles Removed											
20°F	2765/0.62	3685/1.08	4605/1.16	5530/0.85	6450/1.19	7370/1.00	8295/1.28	9215/0.90	11,060/1.26	12,900/1.23	14,745/1.23
30°F	1840/0.28	2455/0.5	3070/0.53	3685/0.39	4300/0.54	4915/0.45	5530/0.58	6140/0.41	7370/0.57	8600/0.56	9830/0.56
40°F	1380/0.16	1840/0.28	2300/0.28	2765/0.21	3225/0.29	3685/0.25	4145/0.31	4605/0.22	5530/0.32	6450/0.31	7370/0.31
50°F	1105/0.12	1475/0.16	1840/0.21	2210/0.15	2580/0.18	2945/0.16	3315/0.21	3685/0.15	4420/0.21	5160/0.19	5895/0.19
60°F	920/0.10	1225/0.14	1535/0.15	1840/0.12	2150/0.15	2455/0.12	2765/0.15	3070/0.11	3685/0.15	4300/0.14	4915/0.15
75°F	735/0.10	980/0.12	1225/0.12	1475/0.11	1720/0.12	1965/0.11	2210/0.12	2455/0.08	2945/0.11	3440/0.11	3930/0.11

Gas Supply Pressure

- The unit is equipped for a maximum gas supply pressure of 1/2 psi, 3.5 kPa, or 14 IN WC for natural gas or propane. The minimum supply pressure, as measured while the unit is operating at full fire, is 5 IN WC for unit sizes 75–300 and 6 IN WC for unit sizes 350 and 400 with electronic modulation or 7 IN WC for unit sizes 350 and 400 with mechanical modulation for natural gas or 11 IN WC for propane.
- Supply pressure higher than 1/2 psi requires the installation of an additional service regulator external to the unit.
- **Pressure testing supply piping:** For test pressures ***above*** 1/2 psi, disconnect the heater and manual valve from the gas supply line to be tested and cap or plug the supply line. For test pressures ***below*** 1/2 psi, before testing, close the manual valve on the heater.

Gas Supply Piping

- All piping must be in accordance with requirements outlined in the *National Fuel Gas Code* (ANSI/Z223.1, latest edition) or the *Natural Gas and Propane Installation Code* (CSA CSA B149.1, latest edition).
- Duct furnaces are orificed for operation with natural gas having a heating value of 1,000 (±50) BTU per cubic foot or with propane gas having a heating value of 2,500 (±100) BTU per cubic foot. Sizing of gas supply lines depends on piping capacity and is based on cubic feet per hour based on a 0.3 IN WC pressure drop, a 0.6 specific gravity for natural gas at 1,000 BTU per cubic feet, and a 1.6 specific gravity for propane at 2,550 BTU per cubic feet. If the gas at the installation does not meet this specification, consult the factory for proper orificing.
- Variables for sizing gas supply lines are listed in the table below. When sizing supply lines, consider the possibility of future expansion and increased requirements. Refer to the *National Fuel Gas Code* for additional information on line sizing.

Pipe Length (Feet)	Natural Gas						Propane					
	Pipe Diameter (Inches)											
	1/2	3/4	1	1-1/4	1-1/2	2	1/2	3/4	1	1-1/4	1-1/2	2
	Cubic Feet per Hour											
20	92	190	350	730	1100	2100	56	116	214	445	671	1281
30	73	152	285	590	890	1650	45	93	174	360	543	1007
40	63	130	245	500	760	1450	38	79	149	305	464	885
50	56	115	215	440	670	1270	34	70	131	268	409	775
60	50	105	195	400	610	1105	31	64	119	244	372	674
70	46	96	180	370	560	1050	28	59	110	226	342	641
80	43	90	170	350	530	990	26	55	104	214	323	604
90	40	84	160	320	490	930	24	51	98	195	299	567
100	38	79	150	305	460	870	23	48	92	186	281	531
125	34	72	130	275	410	780	21	44	79	168	250	476
150	31	64	120	250	380	710	19	39	73	153	232	433
175	28	59	110	225	350	650	17	36	67	137	214	397
200	26	55	100	210	320	610	16	34	61	128	195	372

NOTES

⚠ DANGER ⚠

FIRE OR EXPLOSION HAZARD

- **Failure to follow safety warnings exactly could result in serious injury, death, or property damage.**
- **Improper installation, adjustment, alteration, service, or maintenance can cause serious injury, death, or property damage.**
- **Installation and service must be performed by a qualified installer, service agency, or the gas supplier.**
- **Do not store or use gasoline or other flammable vapors and liquids in the vicinity of this or any other appliance.**

WHAT TO DO IF YOU SMELL GAS

- **Do not try to light any appliance.**
- **Do not touch any electrical switch; do not use any phone in your building.**
- **Leave the building immediately.**
- **Immediately call your gas supplier from a phone remote from the building. Follow the gas supplier's instructions.**
- **If you cannot reach your gas supplier, call the fire department.**

For more information on Reznor HVAC products:

- **Contact your local Reznor representative at 1-800-695-1901**
- **Refer to the manuals and additional consumer materials found at www.reznorhvac.com**

Specifications and illustrations subject to change without notice or incurring obligations.
Latest version of this document is available at **www.reznorhvac.com**.
©2026 Reznor LLC, Saint Charles, MO. All rights reserved.
X-TSL (10-26) REV-G