REZNOR®

Revision: SC-IOM (10-26) 207696-M

Supersedes: SC-IOM (12-25) 207696-L

SEPARATED-COMBUSTION INDOOR GAS-FIRED DUCT FURNACE INSTALLATION, OPERATION, AND MAINTENANCE

MODEL SC



⚠ DANGER ⚠

FIRE OR EXPLOSION HAZARD

- **Failure to follow safety warnings exactly could result in serious injury, death, or property damage.**
- **Improper installation, adjustment, alteration, service, or maintenance can cause serious injury, death, or property damage.**
- **Installation and service must be performed by a qualified installer, service agency, or the gas supplier.**
- **Be sure to read and understand the installation, operation, and service instructions in this manual.**
- **Do not store or use gasoline or other flammable vapors and liquids in the vicinity of this or any other appliance.**

WHAT TO DO IF YOU SMELL GAS

- **Do not try to light any appliance.**
- **Do not touch any electrical switch; do not use any phone in your building.**
- **Leave the building immediately.**
- **Immediately call your gas supplier from a phone remote from the building. Follow the gas supplier's instructions.**
- **If you cannot reach your gas supplier, call the fire department.**

DO NOT DESTROY. PLEASE READ CAREFULLY. KEEP IN A SAFE PLACE FOR FUTURE REFERENCE.

TABLE OF CONTENTS

GENERAL INFORMATION 4
Important Safety Information 4
Warranty 4
Certification 5
Installation Codes 5
Separated Combustion 5
Dimensions 6
Weights 7
Clearances 7
Unit Location 7
Halogenated Hydrocarbons 7
INSTALLATION 8
Unpacking and Inspection 8
Pre-Installation Checklist 8
Reverse Airflow Conversion 9
Suspension 9
Mounting 10
Duct Connections 11
Requirements and Suggestions for Connecting and Installing Ducts 11
Discharge Air Temperature Sensor Installation 12
Duct Furnace Airflow 15
Field-Supplied Blower Connections 15
Bypass Duct Construction 17
Venting/Combustion Air Connections 17
Specific Venting Requirements: Piping 18
Specific Venting Requirements: Venter Outlet and Combustion Air Inlet Connections 19
Specific Venting Requirements: Joints and Sealing 19
Specific Venting Requirements: Support 20
Specific Venting Requirements: Clearance 20
Specific Venting Requirements: Concentric Adapter Box 20
Specific Venting Requirements: Concentric Adapter Box Pipe Connections 22
Vent Terminal Options 22
Vertical Vent Terminal (Option CC2) Installation 23
Horizontal Vent Terminal (Option CC6) Installation 29
Piping Connections 32
Gas Supply Pressure 32
Gas Supply Piping 33
Supply Piping Connections 34
Condensate Drain Kit (Option CS1) Installation 34
Electrical Connections 35
Supply Wiring 35
Control Wiring 36

TABLE OF CONTENTS—CONTINUED

CONTROLS 36
Standard Controls 36
Combustion Air Proving Switch 36
Combination Gas Valve 37
Blower Fan Control 37
Limit Control 37
Pilot and Ignition Systems 37
Burners, Burner Orifices, and Carryover System 38
Optional Controls 39
Thermostat 39
Two-Stage Heating Control (Options AG2) 39
Two-Stage Makeup Air Control (Options AG3 and AG15) 39
Electronic Modulation (Options AG7, AG8, AG9, AG21, AG39, and AG40) 40
Photoelectric Air Duct Smoke Detector (Option SA1) 42
OPERATION 43
Pre-Startup Checklist 43
Startup 43
Post-Startup Checklist 44
ADJUSTMENTS 45
Measure and Adjust Manifold (Outlet) Gas Pressure 45
High-Elevation Conversion 46
Gas Conversion 48
Burner Air Shutter Adjustment 48
MAINTENANCE 48
Service Checklist 49
Combination Gas Valve Maintenance 49
Vent/Combustion Air System Maintenance 49
Maintenance Procedures 49
Burner Rack Maintenance 49
Cleaning Pilot and Burners 50
Venter Motor Maintenance 51
Spark Ignition System Maintenance 51
Cleaning Heat Exchanger 52
TROUBLESHOOTING 53
General Troubleshooting 53
Troubleshooting Bypass Combustion Air Damper Safety Circuit on Units with Option AG39 or AG40 54
INSTALLATION RECORD (TO BE COMPLETED BY INSTALLER) 56

GENERAL INFORMATION

- This unit has been tested for capacity and efficiency so as to provide many years of safe and dependable comfort providing it is properly installed and maintained. With regular maintenance, this unit will operate satisfactorily year after year. Abuse, improper use, and/or improper maintenance can shorten the life of the appliance and create unsafe hazards.
- To achieve optimum performance and minimize equipment failure, it is recommended that periodic maintenance be performed on this unit. The ability to properly perform maintenance on this equipment requires certain tools and mechanical skills.

Important Safety Information

Please read all information in this manual thoroughly and become familiar with the capabilities and use of your appliance before attempting to operate or maintain this unit. Pay attention to all dangers, warnings, cautions, and notes highlighted in this manual. Safety markings should not be ignored and are used frequently throughout to designate a degree or level of seriousness.

DANGER: A danger statement describes a potentially hazardous situation that if not avoided, will result in severe personal injury or death and/or property damage.

WARNING: A warning statement describes a potentially hazardous situation that if not avoided, can result in severe personal injury and/or property damage.

CAUTION: A caution statement describes a potentially hazardous situation that if not avoided, can result in minor or moderate personal injury and/or property damage.

⚠ DANGER ⚠

Gas-fired appliances are not designed for use in hazardous atmospheres containing flammable vapors or combustible dust, in atmospheres containing chlorinated or halogenated hydrocarbons, or in applications with airborne silicone substances.

⚠ WARNING ⚠

For your safety, read the warning labels on the unit.

NOTES:

- **Installation should be done by a qualified agency in accordance with the instructions in this manual and in compliance with all codes and requirements of authorities having jurisdiction.**
- **The instructions in this manual apply only to model SC duct furnaces.**

Warranty

NOTE: These duct furnaces are not certified or approved for use in drying or process applications. If a duct furnace is to be used in a drying or process application, contact the factory for application guidelines and manufacturer's authorization. Without factory authorization, the warranty is void, and the manufacturer disclaims any responsibility for the duct furnace and/or the application.

Refer to the limited warranty information on the warranty card in the owner's envelope. Warranty is void if:

- Separated-combustion heaters are used in atmospheres containing flammable vapors or atmospheres containing chlorinated or halogenated hydrocarbons or any contaminant (silicone, aluminum oxide, etc.) that adheres to the spark ignition flame sensing probe.

- Wiring is not in accordance with the diagram furnished with the heater.
- Unit is installed without proper clearance to combustible materials.
- Furnace air throughput is not adjusted within the range specified on the rating plate.
- Duct furnace is installed in a process or drying application without factory authorization. Any use in a process or drying application voids agency certification.

Certification

- This unit is design-certified to ANSI and CSA standards by the Canadian Standards Association. All models are approved for installation in the United States and in Canada. All furnaces are approved for use with either natural gas or propane. The type of gas for which the furnace is equipped and the correct firing rate are shown on the rating plate attached to the unit. Electrical characteristics are shown on the unit rating plate.
- These gas-fired products are certified by ANSI Z83 family of standards governing the safe usage of heating equipment in the industrial/commercial marketplace. This includes using the heaters in makeup air applications to supply corridor pressurization in commercial buildings such as office structures and apartment complexes.
- The heaters are not certified as residential heating equipment and should not be used as such.

Installation Codes

- These units must be installed in accordance with local building codes. In the absence of local codes, in the United States, the unit must be installed in accordance with the *National Fuel Gas Code* (NFPA 54/ANSI Z223.1, latest edition). A Canadian installation must be in accordance with the *Natural Gas and Propane Installation Code* (CSA B149, latest edition). This code is available from CSA Information Services, 1-800-463-6727. Local authorities having jurisdiction should be consulted before installation is made to verify local codes and installation procedure requirements.
- Installations in aircraft hangars should be in accordance with the *Standard for Aircraft Hangars* (ANSI/NFPA 409, latest edition). Installations in public garages should be in accordance with the *Standard for Parking Structures* (ANSI/NFPA 88A, latest edition). Installations in repair garages should be in accordance with the *Standard for Repair Garages* (NFPA 88B), which has been incorporated into the *Code for Motor Fuel Dispensing Facilities and Repair Garages* (NFPA 30A, latest edition). In Canada, installations in aircraft hangars and public garages should be in accordance with CSA B149.
- Clearances from the heater and vent to combustible construction or material in storage must conform with the *National Fuel Gas Code* (NFPA 54/ANSI Z223.1, latest edition) pertaining to gas-burning devices, and such material must not attain a temperature over 160°F (71°C) by continued operation of the heater.
- If the heater is being installed in the Commonwealth of Massachusetts, installation must be performed by a licensed plumber or licensed gas fitter.

Separated Combustion

Separated-combustion units are designed to separate air for combustion and flue products from the environment of the building in which the unit is installed. Separated-combustion appliances are recommended for use in dust-laden and some corrosive-fume environments. As the definition states, all separated-combustion, power-vented equipment must be equipped with both combustion-air and exhaust piping to the outdoors. This separated-combustion unit is designed and manufactured in accordance with the ANSI definition of separated combustion, which reads:

> **Separated Combustion System Appliance: A system consisting of an appliance and a vent cap(s) supplied by the manufacturer, and (1) combustion air connections between the appliance and the outside atmosphere, and (2) flue gas connections between the appliance and vent cap, of a type(s) specified by the manufacturer but supplied by the installer, constructed so that, when installed in accordance with the manufacturer's instructions, air for combustion is obtained from the outside atmosphere and flue gases are discharged to the outside atmosphere.**

Dimensions

NOTES:

Inches (mm)

Standard airflow may be reversed by changing direction of heat exchanger air baffles.

Burner and control access shown left-hand side. Specify right-hand side for opposite access and connections.

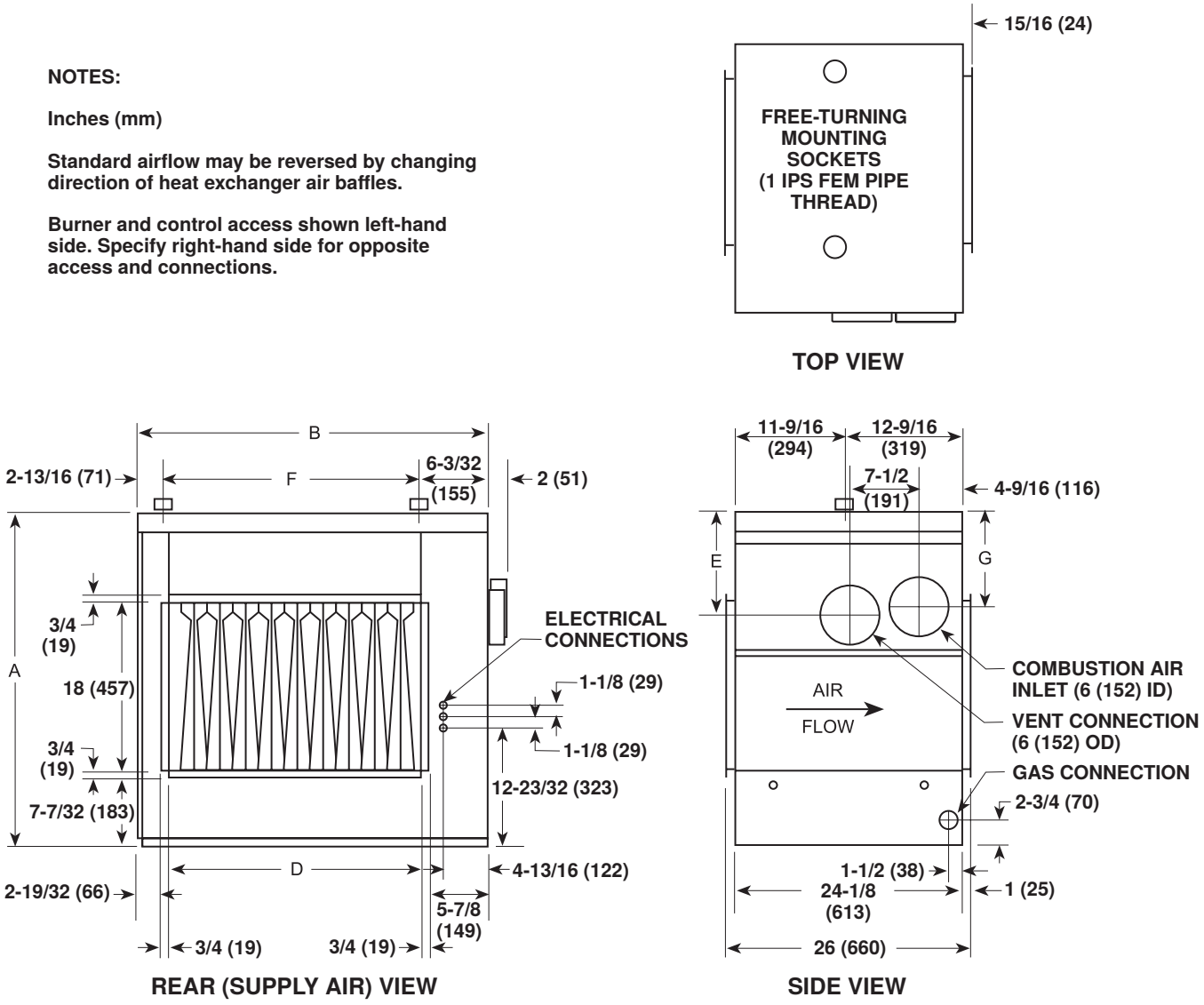

Figure 1. Dimensions (Refer to Table 1)

Table 1. Dimensions

Dimension (See Figure 1)	Unit Size (MBTUh)						
	100	125	150, 175	200, 225	250, 300	350	400
	Inches (mm)						
A	32-1/4 (819)			35-1/4 (895)			
B	22-15/32 (571)	25-7/32 (641)	30-23/32 (780)	36-7/32 (920)	44-15/32 (1130)	49-31/32 (1269)	55-15/32 (1409)
D	12-1/2 (318)	15-1/4 (387)	20-3/4 (527)	26-1/4 (667)	34-1/2 (876)	40 (1016)	45-1/2 (1156)
E	8-1/8 (206)			10-3/4 (273)			
F	13-9/16 (344)	16-15/16 (430)	21-13/16 (554)	27-5/16 (694)	35-9/16 (903)	41-1/16 (1043)	46-9/16 (1183)
G	6-15/16 (176)			9-15/16 (252)			

Weights

Table 2. Weights						
Unit Size (MBTUh)						
100	125	150, 175	200, 225	250, 300	350	400
Pounds (kg)						
158 (72)	178 (81)	203 (92)	283 (128)	321 (146)	350 (159)	410 (186)

Clearances

Clearance to combustibles is defined as the minimum distance—from the heater to a surface or object—that is necessary to ensure that a surface temperature of 90°F (50°C) above the surrounding ambient temperature is not exceeded. For safety and convenience, ensure that the clearances listed in **Table 3** are provided.

Table 3. Clearances	
Unit Surface	Minimum Clearance (Inches (mm))
Top	6 (152)
Control side	6 (152) + width of unit
Side opposite controls	6 (152)
Bottom, to combustibles	6 (152)
Bottom, to noncombustibles	0 (0)

Unit Location

⚠ CAUTION ⚠

Do not locate the unit where it may be exposed to water spray, rain, or dripping water.

- A duct furnace is designed for connection to an inlet and an outlet duct and depends on an external air handler. The location must comply with the clearances listed in **Table 3**. There are a variety of factors, such as system application, building structure, dimensions, and weight, that contribute to selecting the location. Read the installation information in this manual and select a location that complies with the requirements.

Halogenated Hydrocarbons

⚠ WARNING ⚠

SC series separated-combustion units are not designed or approved for use in atmospheres containing flammable vapors or atmospheres highly-laden with chlorinated vapors.

Halogenated hydrocarbons are a family of chemical compounds characterized by the presence of halogen elements (fluorine, chlorine, bromine, etc.). These compounds are used in refrigerants, cleaning agents, and solvents and are heavier than air, a fact that should be kept in mind when determining the installation location of heaters and building exhaust systems.

⚠ CAUTION ⚠

CORROSION HAZARD: Halogenated hydrocarbons, when exposed to flame, precipitate with any condensation present in the heater to form hydrochloric acid, which readily attacks all metals, including 300 grade stainless steel. Care should be taken to separate these vapors from the combustion process. An outside air supply MUST BE provided to the burner whenever the presence of these compounds is suspected.

INSTALLATION

Unpacking and Inspection

- The unit was test-operated and inspected at the factory prior to crating and was in operating condition. If, upon removing it from its crate, the unit has been found to have incurred any damage in shipment, document the damage with the transporting agency and contact an authorized Factory Distributor. If you are an authorized Distributor, follow the FOB freight policy procedures.

NOTE: After removing the shipping clips that fasten the unit to the crate, it is required that the bolts that attach the shipping clips be reinstalled for support.

- The bottom corners are fastened to the crate using angled shipping clips. Remove the bolts from the shipping clips and remove the clips. Reinstall the bolts on the heater legs to support the corner leg and the heater bottom.

Pre-Installation Checklist

- ❑ Check the rating plate for the gas specifications and electrical characteristics of the heater to ensure that they are compatible with the gas and electric supplies at the installation site.
- ❑ Read this manual and become familiar with the installation requirements of your particular heater.
- ❑ If you do not have knowledge of local requirements, check with the local gas company or any other local agencies who might have requirements concerning this installation.
- ❑ Before beginning, make preparations for necessary supplies, tools, and manpower.
- ❑ Check to see if there are any field-installed options (refer to **Table 4**) that need to be assembled/installed prior to unit installation. Ensure that all options ordered are at the installation site. Instructions are in this manual or in the shipped-separate option package.

Table 4. Field-Installed Options

Option	Description
AG7	Electronic modulation with room thermostat
AG9	Electronic modulation with ductstat and remote temperature selector
CC2	Vertical vent terminal
CC6	Horizontal vent terminal
CE1	Manual shutoff valve, natural gas
CE2	Manual shutoff valve, propane
CL1	Single-stage thermostat
CL9	Electronic modulating room override
CL22	Two-stage thermostat
CL33	Two-stage digital thermostat
CL52	Single-stage digital thermostat
CM1	Locking thermostat cover
CM1B	Large locking thermostat cover
CP2, CP3, CP4, CP41, CP58	Disconnect switches
CS1	Condensate drain flange
SA1	Photoelectric air duct smoke detector

Reverse Airflow Conversion

Duct furnaces are equipped with directional air baffles between the heat exchanger tubes. Facing the control compartment of the furnace, the standard direction of airflow is from left to right. If the installation site requires airflow from right to left, the unit may be field-adapted by reversing the position of the directional air baffles (see **Figure 2**) as follows:

1. Remove and save baffle screws and lift each airflow baffle slightly and slide forward. Remove all baffles from heat exchanger.
2. Remove and save top baffle support screws and remove top baffle support. Reposition and secure support on opposite end of heat exchanger using existing screws.
3. Remove bracket screws and remove bottom baffle support and bracket assembly. Reinstall bracket screws to plug holes in heat exchanger bottom. Reposition bottom baffle support and bracket assembly on opposite end of heat exchanger and secure using field-supplied sheet metal screws.
4. Reinstall airflow baffles removed in step 1 and secure using existing screws.

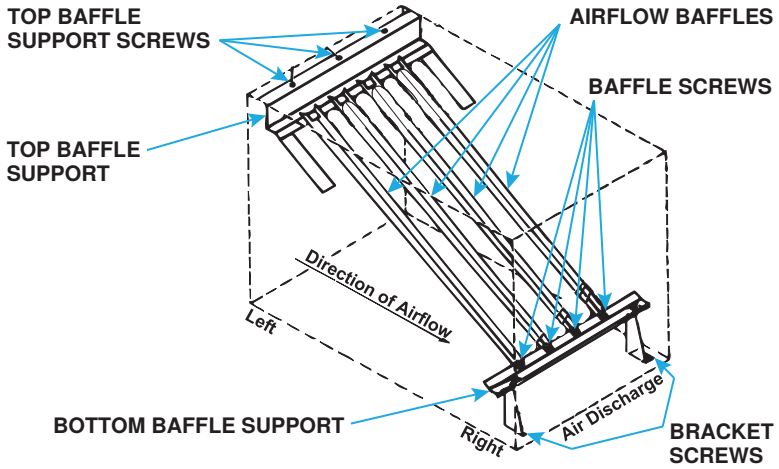

Figure 2. Airflow Baffles

Suspension

⚠ WARNING ⚠

- **Before installation, check the supporting structure to ensure that it has sufficient load-carrying capacity to support the weight of the unit.**
- **Units must be level for proper operation. Do not place additional weight on or add additional weight to the suspended unit.**

The unit has two-point suspension (see hanger center line dimensions shown in **Figure 1**). At each suspension point, the unit is factory-equipped with a free-turning, female, 1-inch NPT pipe hanger. Suspend the unit by connecting the pipe hanger to a 1-inch threaded pipe. See **Figure 2** for the standard and alternative suspension methods. The factory-installed pipe hanger may be removed and the heater may be suspended as shown in the right view of **Figure 2**.

Suspension—Continued

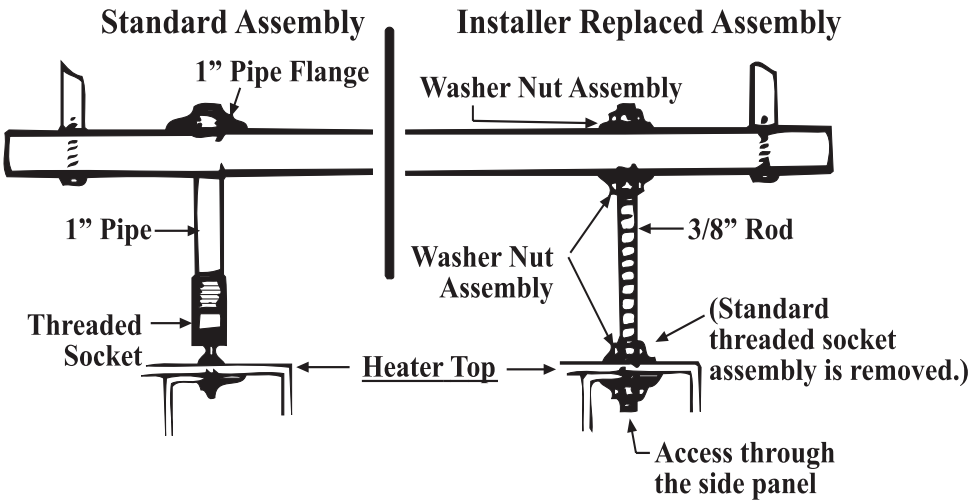

Figure 3. Suspension Methods

Mounting

Most furnaces will be suspended. If the installation requires the furnace to be mounted, see **Figure 4**, which shows the requirements for field-fabricating support feet.

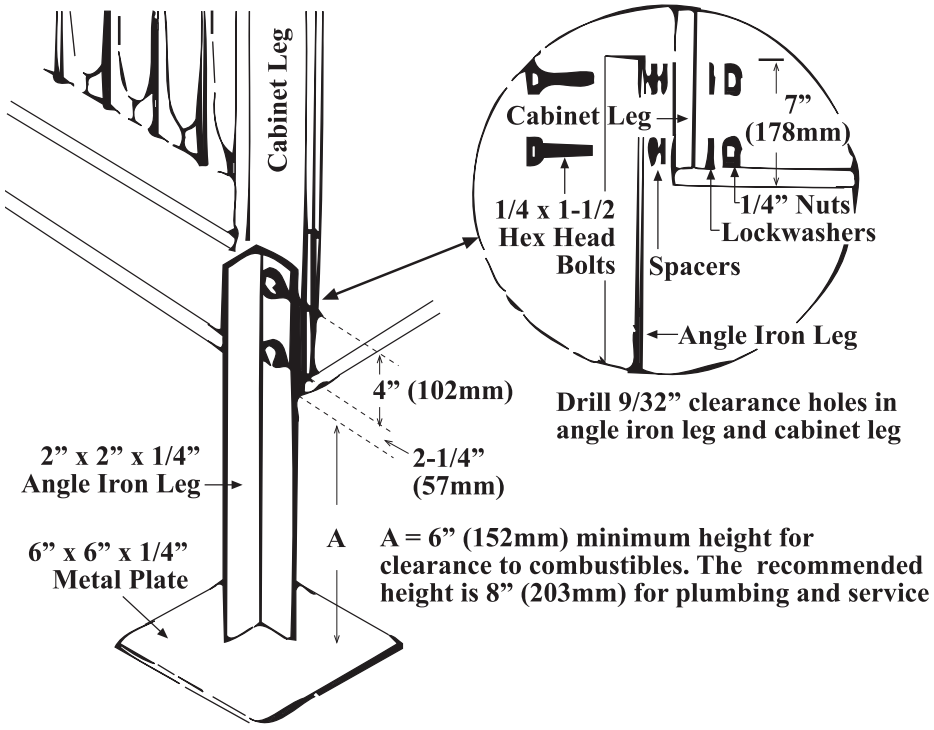

Figure 4. Corner Mounting Supports

Duct Connections

NOTE: Make adjustments to ductwork as necessary to obtain a temperature rise and static pressure within the ranges specified on the heater rating plate.

Table 5. Duct Connection Dimensions

Unit Size (MBTUh)						
100	125	150, 175	200, 225	250, 300	350	400
Dimension G (Inches (mm)*						
12-1/2 (318)	15-1/4 (387)	20-3/4 (527)	26-1/4 (667)	34-1/2 (876)	40 (1016)	45-1/2 (1156)

*See **Figure 5**.

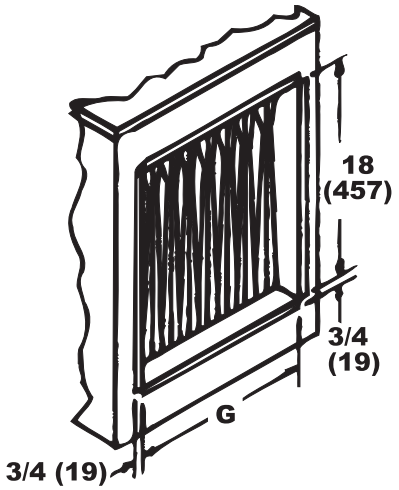

Figure 5. Duct Connection Dimensions

Requirements and Suggestions for Connecting and Installing Ducts

- **Type of ductwork:** The type of duct installation to be used depends in part on the construction type of the roof—whether wood or steel bar joist, steel truss, or pre-cast concrete—and the ceiling—whether hung, flush, etc.
- **Ductwork material:** Rectangular duct should be constructed of galvanized iron—not lighter than No. 26 US gauge—or aluminum—No. 24 B&S gauge.
- **Ductwork structure:** All duct sections 24 inches (610 mm) or wider and over 48 inches (1,219 mm) in length should be cross-broken on top and bottom and should have standing seams or angle-iron braces. Joints should be S and drive strip or locked.
- **Through masonry walls:** No warm air duct should come in contact with masonry walls. Insulate around all air duct through masonry walls with 1-inch (not less than 1/2-inch) of insulation.
- **Through unheated space:** Insulate all exposed warm air ducts passing through an unheated space with 1-inch (not less than 1/2-inch) of insulation.
- **Duct supports:** Suspend all ducts securely from adjacent buildings members. Do not support ducts from unit duct connections.
- **Duct sizing:** Proper sizing of the supply air ductwork is necessary to ensure a satisfactory heating installation. The recognized authority for duct size is the Air Conditioning Contractor's Association, 2800 Shirlington Road, Suite 300, Arlington, VA 22206 (**www.acca.org**). A manual covering duct sizing in detail may be purchased directly from them.

⚠ CAUTION ⚠

To prevent possible motor overloading, ensure that the external duct system static pressure is within the limits shown on the rating plate and that the motor pulley and belt are properly adjusted.

Duct Connections—Continued

- **Horizontal discharge duct length:** To reduce losses at the furnace outlet, a minimum horizontal duct run of 24 inches (610 mm) is recommended before turns or branches are made in the duct system.

⚠ CAUTION ⚠

The joint where the supply air duct attaches to the furnace must be sealed securely to prevent air leakage into draft hood or burner rack area. Leakage can cause poor combustion and pilot problems, can shorten heat exchanger life, and can cause poor performance.

- **Supply air duct/furnace horizontal connection:** Connect the duct to the furnace in accordance with the following steps shown in **Figure 6**:
  a. Ensure that flanges on furnace (heat exchanger) turn out as shown.
  b. Shape duct connection as shown—U-type on top and bottom and L-type on sides.
  c. Slide U-channels over furnace top and bottom flanges.
  d. Drill fastener holes and secure U-channels using sheet metal screws.
- **Access panels:** Install removable access panels (see **Figure 6**) on both the upstream and downstream sides of the furnace. The access panels must be accessible when the furnace is in service and should be a minimum of 6 × 10 inches (152 × 254 mm) in size so smoke or reflected light may be observed inside the casing to indicate the presence of leaks in the heat exchanger. Ensure that the access panels are installed in such a manner so as to prevent leakage.
- **Return air duct/furnace connection:** All return air ducts should be attached and sealed to the return air flanges to provide airtight connections.
- **Return air duct/grill size:** Ensure that return air ducting or grills have a free area equal to the size of the return duct connection.

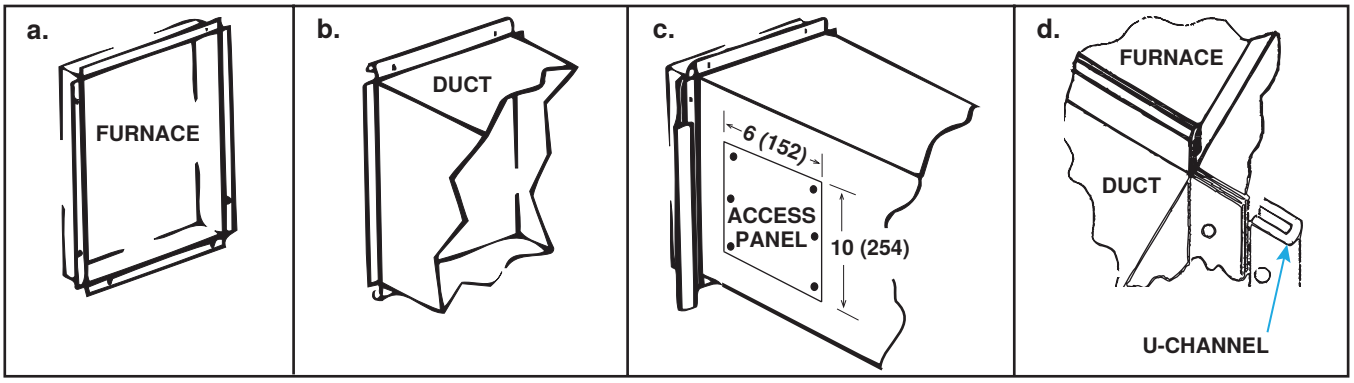

Figure 6. Connecting Ductwork to Furnace

Discharge Air Temperature Sensor Installation

Depending on the gas control option, the discharge air temperature sensor is either factory- or field-installed. Field-installed sensors have one of two configurations: a sensor and mixing tube assembly or a sensor holder and junction box assembly. For units with the sensor holder and junction box assembly option, the sensor is normally installed on a bracket in the furnace discharge for shipping but it may be mounted in the cabinet leg (see **Figure 7**).

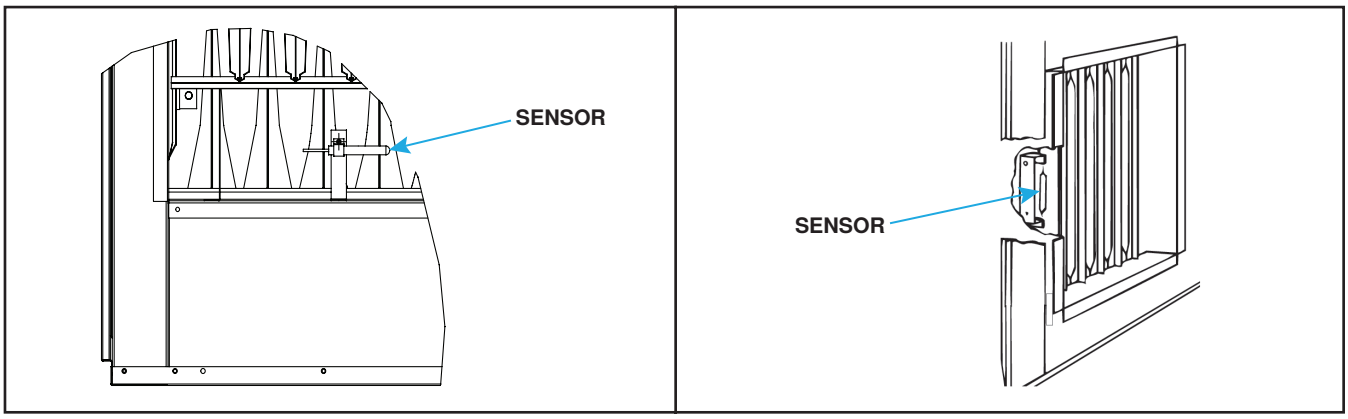

Figure 7. Shipping Locations of Capillary Sensor

NOTE: According to the latest edition of AMCA Standard 201, in straight ducts, the air is typically well mixed a minimum of five equivalent duct diameters from the discharge of the unit with equivalent duct diameter defined as equal to the square root of 4AB/3.14 (A and B are duct cross-sectional dimensions). If the length of the discharge duct is less than 8 feet (2.4 meters), a mixing vane is recommended for mixing the discharge air. Do not mount the sensor in the ductwork after a split in the supply as this will cause loss of control in the duct that does not house the sensor.

1. Determine distance of sensor from unit:
   a. Locate the sensor a minimum of 96 inches (2,435 mm) from the outlet of the unit. Ensure that there is sufficient distance from outlet to have good mixture of discharge air temperature.
   b. Refer to following formula for calculating sensor placement—this assumes cross-sectional dimensions for supply ductwork of 24 × 12 inches (610 × 305 mm):

$$5\ equivalent\ duct\ diameters \times \sqrt{\frac{4 \times 12 \times 24}{3.14}} = 96\ inches$$

$$5\ equivalent\ duct\ diameters \times \sqrt{\frac{4 \times 305 \times 610}{3.14}} = 2435\ millimeters$$

2. Determine orientation of sensor:
   a. In horizontal ductwork, position sensor in top-middle of duct with sensor probe extending vertically down into center of air stream.
   b. In vertical ductwork, position sensor in middle of duct that corresponds with top-middle of discharge outlet.

NOTE: Position of sensor in duct is important—mixing tube is 12 inches (305 mm) long and sensor holder extends 9-3/16 inches (233 mm) into ductwork.

3. Secure sensor in ductwork:
   a. For units with sensor and mixing tube assembly (see **Figure 8**), remove ductwork access panel, slide mixing tube into ductwork, and secure sensor.

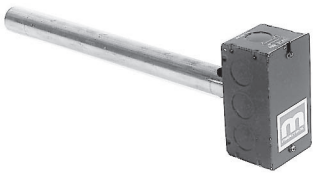

Figure 8. Sensor and Mixing Tube Assembly

Duct Connections—Continued

Discharge Air Temperature Sensor Installation—Continued

NOTE: For the capillary sensor, select a ductwork location so that the minimum length of capillary tubing will be inside the ductwork. Because the sensor is larger than the tubing, a gasket and gasket retainer plate are provided to plug the hole and to protect the capillary tubing where it passes through the ductwork. Two field-supplied sheet metal screws are needed to secure the plate.

b. For units with sensor holder and junction box assembly option (see **Figure 9**):



Figure 9. Sensor Holder and Junction Box Assembly

(1) Before connecting ductwork to furnace, remove capillary sensor from its shipping position on furnace (see **Figure 7**).

(2) At selected ductwork location, mark and cut 1/2-inch hole hole that will be sealed with gasket and retainer plate (see **Figure 10**). Push sensor and capillary tubing through hole.

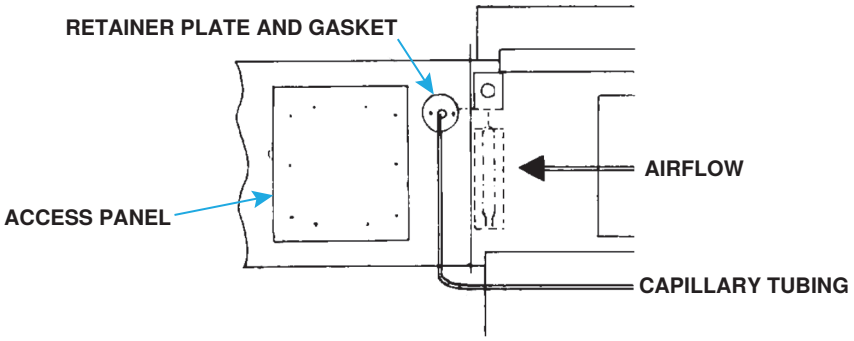

Figure 10. Capillary Sensor Installation

(3) Remove ductwork access panel (see **Figure 10**) and install sensor in sensor holder so that it senses air temperature as it flows through holes in holder.

(4) Position sensor holder and junction box assembly inside ductwork so that sensor will be shielded from direct airflow and secure junction box to ductwork using four field-supplied #6 sheet metal screws.

(5) Slide gasket (cut slit) and retainer plate over capillary tubing. With gasket next to ductwork, install hole retaining plate and secure using field-supplied sheet metal screws.

(6) Close ductwork access panel.

NOTE: Ensure that all sensor wires are connected in accordance with the wiring diagram provided with the unit.

4. Connect sensor wire(s)—for units with sensor holder and junction box assembly, remove junction box knockout and connect sensor wire using field-supplied cable connector secured to box.

Duct Furnace Airflow

The duct furnace must be installed on the positive pressure side of the field-supplied blower. Air throughput must be within the CFM range stated on the heater rating plate. The air distribution must be even over the entire heat exchanger. To determine temperature rise, the inlet and outlet air temperatures should be measured at points not affected by heat radiating from the heat exchanger. Refer to **Table 6** for the approved temperature rise range with the required CFM and the internal pressure drop for each size of unit. Refer to the **Field-Supplied Blower Connections** section for suggested blower connections that include turning vanes used in elbows or turns in the air inlet to ensure proper air distribution. If it is determined that the blower CFM is greater than that which is allowed or desirable, refer to the **Bypass Duct Construction** section for instructions on determining the correct size of bypass duct required.

Table 6. Temperature Rise, CFM, and Internal Pressure Drop

Temperature Rise	Unit Size (MBTUh)									
	100	125	150	175	200	225	250	300	350	400
	CFM/Pressure Drop (IN WC)									
80% Thermal Efficient										
50°F	1480/0.50	1850/0.50	2220/0.36	2590/0.52	2960/0.41	3330/0.53	3700/0.42	4440/0.58	5185/0.67	5925/0.67
55°F	1345/0.34	1680/0.41	2020/0.30	2355/0.43	2690/0.34	3030/0.44	3365/0.35	4040/0.48	4710/0.55	5385/0.55
60°F	1235/0.29	1540/0.34	1850/0.26	2160/0.36	2465/0.28	2775/0.37	3085/0.30	3700/0.40	4320/0.46	4935/0.46
70°F	1055/0.21	1320/0.25	1585/0.19	1850/0.26	2115/0.21	2380/0.27	2645/0.22	3175/0.30	3700/0.34	4230/0.34
80°F	925/0.16	1155/0.19	1385/0.14	1620/0.20	1850/0.17	2080/0.21	2315/0.20	2775/0.23	3240/0.26	3700/0.26
85°F	870/0.14	1085/0.18	1305/0.13	1525/0.18	1740/0.15	1960/0.19	2175/0.20	2610/0.22	3050/0.23	3485/0.23
90°F	820/0.12	1025/0.16	1235/0.12	1440/0.16	1645/0.13	1850/0.17	2055/0.18	2465/0.20	2880/0.21	3290/0.21
With Finger Baffles Removed										
20°F	3700/1.08	4630/1.12	5555/0.85	6480/1.11	7405/1.02	8330/1.24	9255/0.90	11,110/1.24	12,960/1.24	14,815/1.24
30°F	2465/0.48	3085/0.50	3700/0.38	4320/0.50	4935/0.45	5555/0.55	6170/0.40	7405/0.55	8640/0.55	9875/0.55
40°F	1850/0.27	2315/0.28	2775/0.21	3240/0.28	3700/0.25	4165/0.31	4630/0.22	5555/0.31	6480/0.31	7405/0.31
50°F	1480/0.17	1850/0.18	2220/0.14	2590/0.18	2960/0.16	3330/0.20	3700/0.14	4440/0.20	5185/0.20	5925/0.20
60°F	1230/0.13	1540/0.13	1850/0.11	2160/0.14	2465/0.12	2775/0.15	3085/0.11	3700/0.15	4320/0.15	4935/0.15
70°F	1055/0.10	1320/0.11	1585/0.10	1850/0.13	2115/0.10	2380/0.11	2645/0.09	3170/0.11	3700/0.11	4230/0.11
75°F	985/0.09	1230/0.10	1480/0.09	1725/0.11	1975/0.09	2220/0.10	2465/0.08	2960/0.10	3455/0.10	3950/0.10

Field-Supplied Blower Connections

⚠ WARNING ⚠

The furnace must be installed on the positive pressure side of the air-circulating blower.

Blower connection requirements are as follows:

- Blowers should be bottom horizontal discharge when coupled to the duct furnace.
- When a top horizontal discharge blower is connected to the ductwork, ensure that the duct is of sufficient length to permit the even flow of air at the end of the duct. Alternatively, baffles may be inserted between the blower and the heater to assure an even flow of air across the heat exchanger.
- If a higher CFM is required through the furnace within the limits listed in **Table 7**, install the high CFM conversion kit (PN 263309) that is shipped with the unit.

Table 7. High Air Throughput

Minimum or Maximum	Unit Size (MBTUh)									
	100	125	150	175	200	225	250	300	350	400
	CFM									
Minimum	980	1230	1480	1725	1975	2220	2465	2960	3455	3950
Maximum	3700	4630	5555	6480	7405	8330	9255	11,110	12,900	14,815

Duct Connections—Continued

Field-Supplied Blower Connections—Continued

- Proper arrangements of the blower and the duct furnace with respect to the angle of approach of the duct connection and the arrangement of the discharge opening of the blower are shown in **Figure 11**.

⚠ CAUTION ⚠

Abrupt angle approaches shown in Figure 11 can be detrimental to unit life. Ensure that ample air is directed at the base of the tube section by using turning vanes as shown.

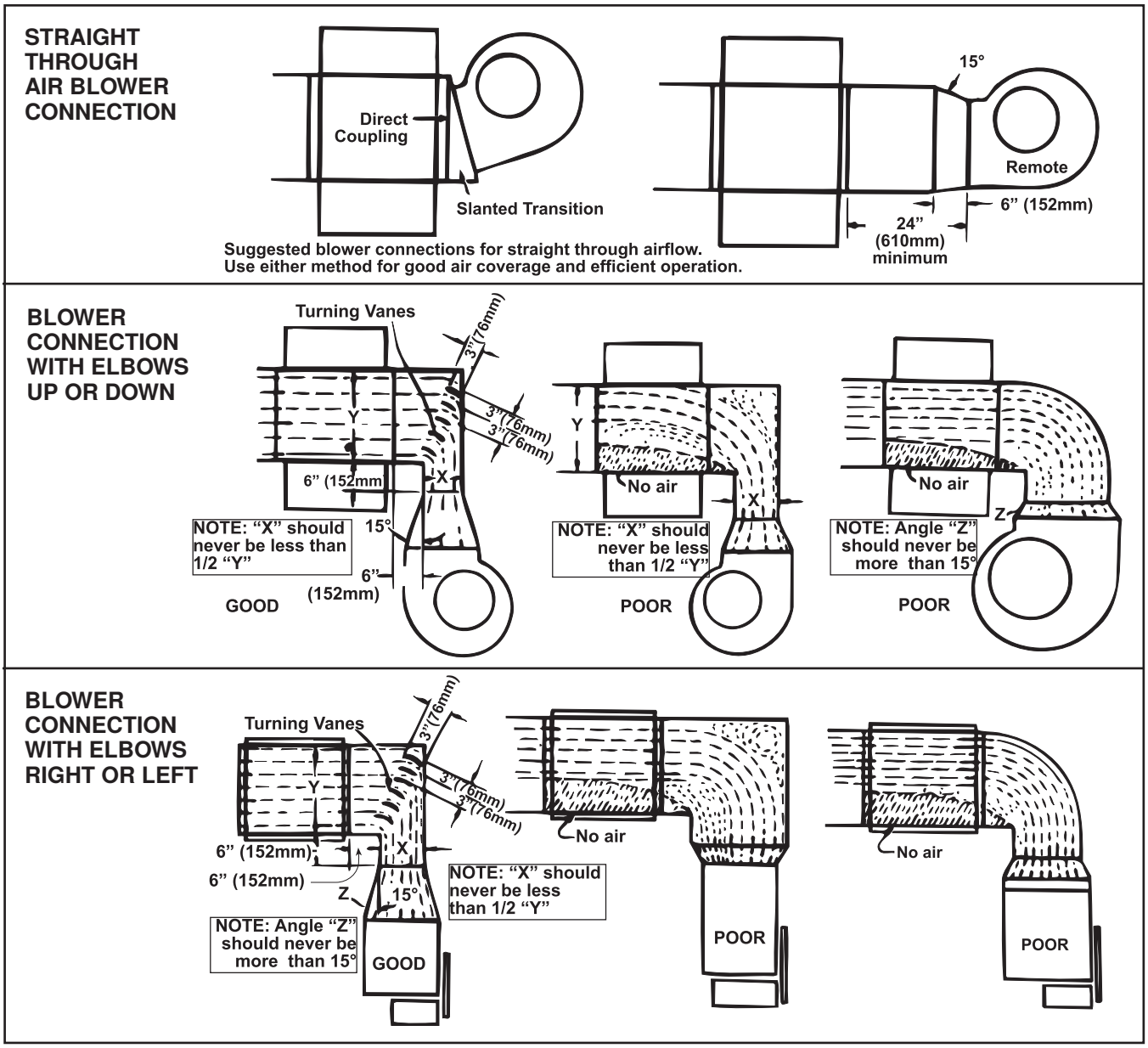

Figure 11. Duct Furnace Blower Connections

Bypass Duct Construction

When the CFM of air throughput is greater than that which is desirable or permissible for the unit, a bypass duct (see **Figure 12**) may be constructed. Determine the correct size of the bypass duct as follows:

1. Refer to **Table 6** to determine pressure drop and allowable CFM for furnace being installed (e.g., standard size SC250 @ **50°F** temperature rise: pressure drop = **0.36** and allowable CFM = **2,220**).
2. Subtract allowable CFM from ***actual*** CFM to determine how much air must be diverted through bypass duct (e.g., ***actual*** CFM = **3,000**: **3,000** – **2,220** = **780** (bypass CFM)).
3. Refer to **Table 8** to determine duct size based on closest bypass CFM value in column topped by closest pressure drop value (e.g., pressure drop = **0.36** (go to 0.35 column) and bypass CFM = **780** (830 is closest value in that column), therefore, bypass duct A dimension (see **Figure 12**) = **3 inches (76 mm)**.

NOTES:

- **The depth of the bypass duct is 18 inches on both inlet and outlet ends. The bypass duct must be located on the side opposite the controls and 2 inches from the heat exchanger side panel.**
- **Not all capacities are covered in Table 8. If your installation is not covered, the correct size may be determined by consulting your Factory Representative.**

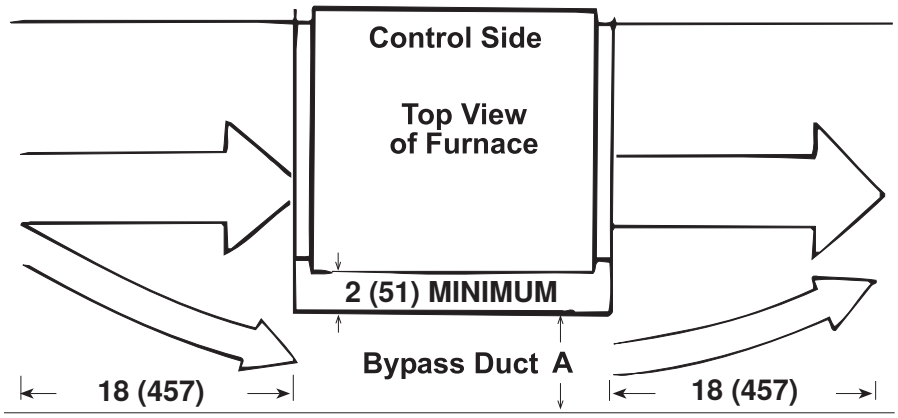

Figure 12. Bypass Duct Dimensions

Table 8. Bypass Duct Sizing

Dimension A (Inches (mm))*	Pressure Drop (IN WC)								
	0.10	0.15	0.20	0.25	0.30	0.35	0.40	0.45	0.50
	Bypass CFM								
3 (76)	490	530	610	700	780	830	900	960	1010
4 (102)	630	750	870	980	1090	1160	1250	1310	1400
5 (127)	850	1010	1190	1300	1410	1520	1640	1730	1810
6 (152)	1050	1290	1480	1650	1800	1940	2090	2200	2320
7 (178)	1250	1510	1760	1960	2180	2320	2500	2650	2800
8 (203)	1490	1810	2100	2350	2560	2760	2940	3110	3290
9 (229)	1700	2100	2400	2700	2970	3200	3400	3600	3800
10 (254)	1920	2350	2760	3090	3650	4020	4300	4550	4800

*See **Figure 12**.

Venting/Combustion Air Connections

⚠ WARNING ⚠

Do not use an existing venting system. This heater requires installation of the combustion air/vent system ordered with the unit (either option CC2 or CC6). Vent installation to be any listed vent system manufacturer. Do not intermix different vent system parts from different manufacturers in the same venting system.

Venting/Combustion Air Connections—Continued

- All separated-combustion, power-vented units MUST BE equipped with both combustion air and exhaust piping to the outdoors. The unique concentric adapter box designed for use with this heater allows for both combustion air and exhaust piping with only one horizontal or vertical penetration hole in the building.
- These instructions apply to installation and use of the concentric adapter and vent/combustion air kit (option CC2 or CC6) designed for use with all Reznor separated-combustion products. The systems illustrated in this manual are the only venting/combustion air systems approved for these separated-combustion units. Do not use this concentric adapter box with any other products.
- Installation should be done by a qualified agency in accordance with these instructions. The service agency installing this separated-combustion system is responsible for the installation.

Specific Venting Requirements: Piping

All pipe is field-supplied. Requirements for both the vent pipe and the combustion air inlet pipe are as follows:

- **Vent pipe:** Vent pipe approved for a Category III appliance OR single-wall, 26-gauge or heavier galvanized (or a material of equivalent durability and corrosion resistance) vent pipe is required between the heater and the concentric adapter box. Double-wall (Type B) vent pipe is required for the vent terminal section. The length of vent pipe that extends through the box and runs concentric through the combustion air pipe must be one piece with no joints.
- **Combustion air pipe:** Sealed, single-wall galvanized pipe is recommended for combustion air.
- **Pipe length and diameter:** Vent pipe diameters and maximum indoor vent lengths apply to both horizontal and vertical vents. Pipe diameter and length requirements listed for the indoor sections of pipe—between the heater and the concentric adapter box—are listed in **Table 9**.

NOTE: Add all straight sections and equivalent lengths for elbows. The total length of the straight sections and elbows must not exceed the maximum length.

- **Outdoor concentric pipes length and diameter:** The lengths of the outside (terminal) concentric pipes depend on the installation. The diameters are 8 inches (203 mm) for the combustion air pipe and 5 inches (127 mm) for the vent pipe.

Table 9. Pipe Diameter and Maximum Pipe Length from Heater to Concentric Adapter Box

Unit of Measurement	Diameter/Length	Unit Size (MBTUh)			
		100	125–175	200–300	350, 400
Inch (mm)	Vent pipe diameter	6 (152)			
		—		7 (178)	
	Combustion air pipe diameter	6 (152)			
		—		7 (178)	
Foot (meter)	Minimum length	5 (1.5)			
	Maximum length, 6-inch pipe	40 (12)	50 (15)		30 (9)
	Maximum length, 7-inch pipe	—		70 (21)	
	Equivalent straight length for 45-degree elbow	4 (1.2)			
	Equivalent straight length for 90-degree elbow	8 (2.4)			

Specific Venting Requirements: Venter Outlet and Combustion Air Inlet Connections

⚠ DANGER ⚠

All separated-combustion units MUST BE equipped with both combustion air and exhaust piping to the outdoors.

Model SC heaters have both an inlet air and a venter outlet connection. Both are 6 inches (152 mm) in diameter for all unit sizes.

NOTE: If using 7-inch pipe on unit sizes 200–400, use a tapered 7- to 6-inch reducer to connect the vent pipe or combustion air pipe.

Specific Venting Requirements: Joints and Sealing

Seal pipe joints as follows:

- **To seal joints in Category III vent pipe:** Follow the pipe manufacturer's instructions for joining and sealing Category III vent pipe sections.
- **To seal joints in single-wall vent or combustion air pipe:** Secure slip-fit pipe connections using sheet metal screws or rivets. Seal all joints with aluminum tape or silicone sealant.
- **To seal the joint in the terminal section of double-wall vent pipe (allowed ONLY ABOVE the concentric pipes on a VERTICAL vent):** Follow the pipe manufacturer's instructions for joining and sealing double-wall vent pipe sections.
- **Connect double-wall (type B) pipe to a vent cap as follows:**
  a. Apply continual 3/8-inch bead of silicone sealant around circumference of vent cap collar (see **Figure 13**, DETAIL A) to prevent any water inside vent cap from running down double-wall pipe.
  b. Before sealant has any time to dry, insert collar on vent cap as far as possible inside inner wall of double-wall pipe (see **Figure 13**, DETAIL B).
  c. Apply additional silicone sealant to fully close any gaps between vent cap and double-wall pipe to prevent water from entering double-wall pipe.
  d. Secure vent cap to double wall pipe by drilling hole and inserting 3/4-inch-long sheet metal screw into vent cap collar (see **Figure 13**, DETAIL C). Do not overtighten screw.

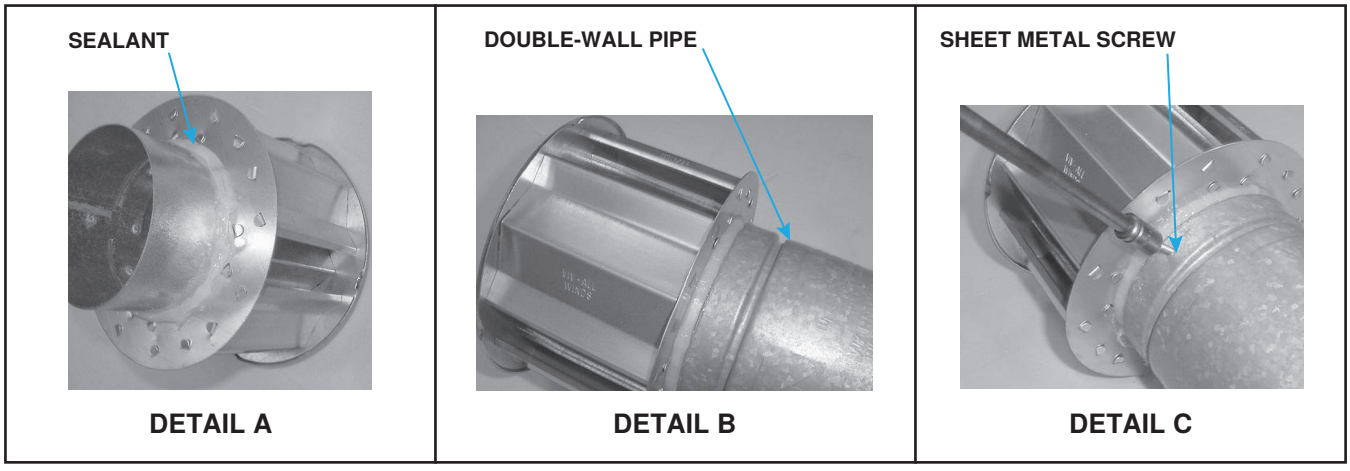

Figure 13. Connecting Double-Wall (Type B) Pipe to Vent Cap

Venting/Combustion Air Connections—Continued

Specific Venting Requirements: Joints and Sealing—Continued

- **Connect double-wall (type B) pipe to a single-wall or category III vent pipe—within 6 inches (152 mm) of the concentric adapter box and using a taper-type reducer as necessary—as follows:**
  a. Apply continual 1/4-inch bead of silicone sealant (see **Figure 14**, DETAIL A) around circumference of pipe.
  b. Before sealant has any time to dry, insert pipe with sealant into inner wall of double-wall pipe (see **Figure 14**, DETAIL B) until bead of sealant contacts inner pipe to create sealed joint.
  c. Drill three small holes—spaced equally around double-wall pipe—below sealant ring (see **Figure 14**, DETAIL C) and insert 3/4-inch-long sheet metal screws to secure joint. Do not overtighten screws.

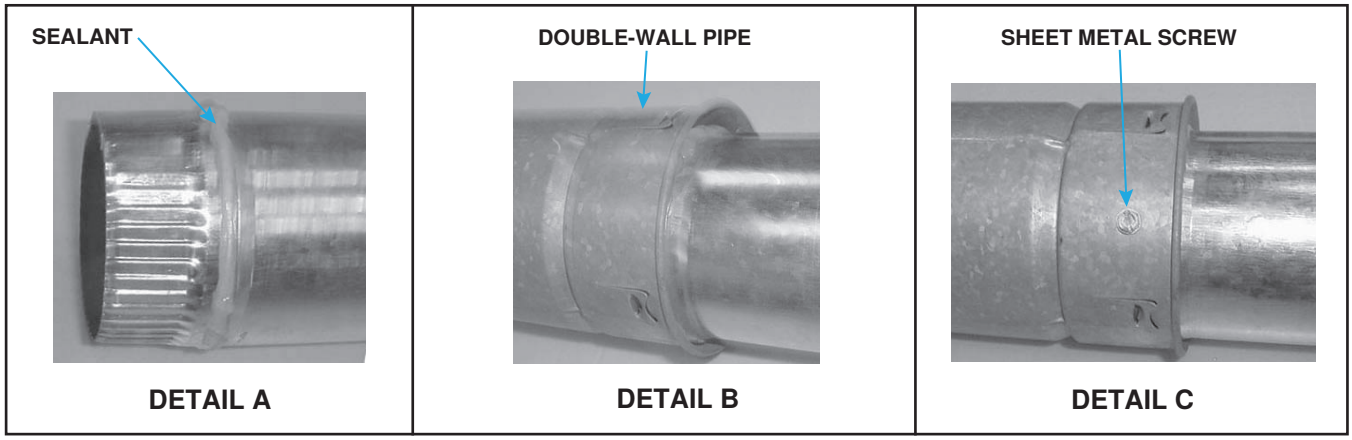

Figure 14. Connecting Double-Wall (Type B) Pipe to Single-Wall or Category III Vent Pipe

Specific Venting Requirements: Support

Support horizontal runs every six feet (1.8 meters). Support vertical runs of Type B double-wall or Category III vent pipe in accordance with the requirements of the pipe manufacturer. Support single-wall vertical pipe in accordance with accepted industry practices. Do not rely on the heater or the adapter box for support of either horizontal or vertical pipes. Use noncombustible supports on vent pipe.

NOTE: The double-wall vent terminal pipe does not attach to the concentric adapter box and must be supported during installation.

Specific Venting Requirements: Clearance

Do not enclose the vent pipe or place pipe closer than 6 inches (152 mm) to combustible material.

Specific Venting Requirements: Concentric Adapter Box

The concentric adapter box (PN 205885) is included in the vent/combustion air kit. Installation instructions depend on whether the vent system is horizontal (option CC6) or vertical (option CC2). All separated-combustion installations require a concentric adapter box as shown in **Figure 15**.

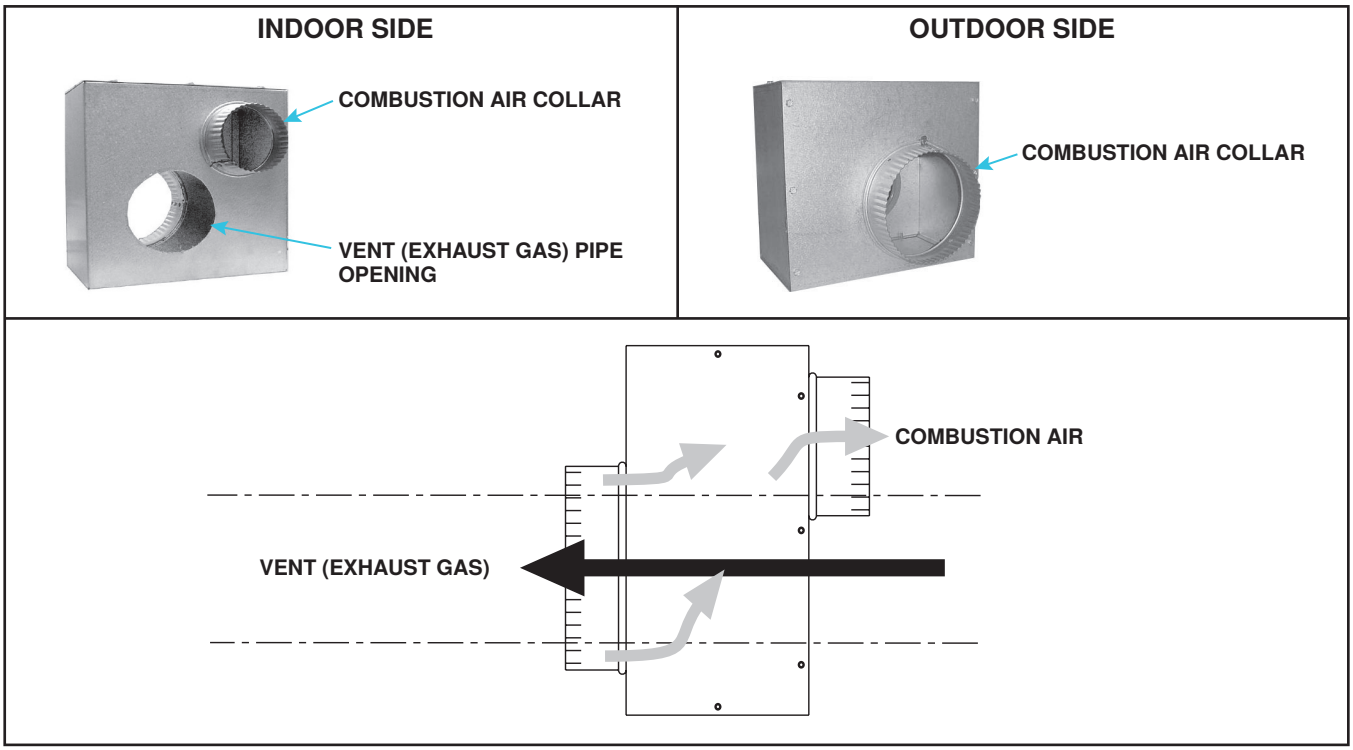

Figure 15. Concentric Adapter Box

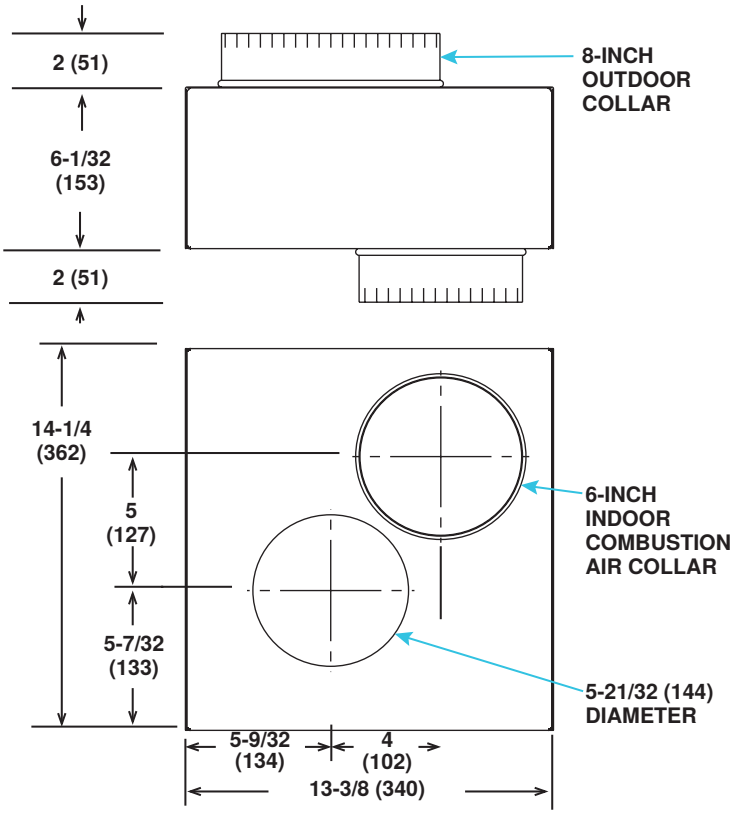

Figure 16. Concentric Adapter Box Dimensions

Venting/Combustion Air Connections—Continued

Specific Venting Requirements: Concentric Adapter Box Pipe Connections

When pipe diameters differ, depending on the direction of airflow, join the pipes with a taper-type reducer. Requirements vary depending on the unit size. The connection requirements are the same for both vertical and horizontal systems, but the length of pipe required varies by installation.

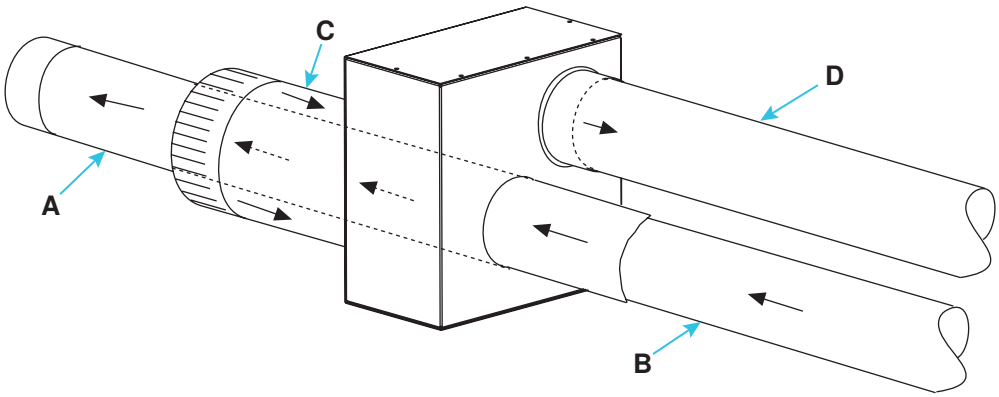

Figure 17. Concentric Adapter Box Connections (Refer to Table 10)

Table 10. Concentric Adapter Box Pipe Sizes

Unit Size (MBTUh)	Vent Pipe		Combustion Air Pipe	
	Pipe Diameter (See Figure 17)			
	A	B	C	D
	Inches (mm)			
All	5 (127)	6 (152)*	8 (203)	6 (152)
200, 225, 250, 300, 350, 400		7 (178)**		7 (178)***
*Requires a 6–5 inch (152–127 mm) taper-type reducer installed within 6 inches (152 mm) of the concentric adapter box.				
**Requires a 7–5 inch (178–127 mm) taper-type reducer installed within 6 inches (152 mm) of the concentric adapter box.				
***Requires a 7–6 inch (178–152 mm) taper-type reducer installed within 6 inches (152 mm) of the concentric adapter box.				

Vent Terminal Options

Vent terminal options CC2 (vertical vent configuration) and CC6 (horizontal vent configuration) are shown in **Figure 18**.

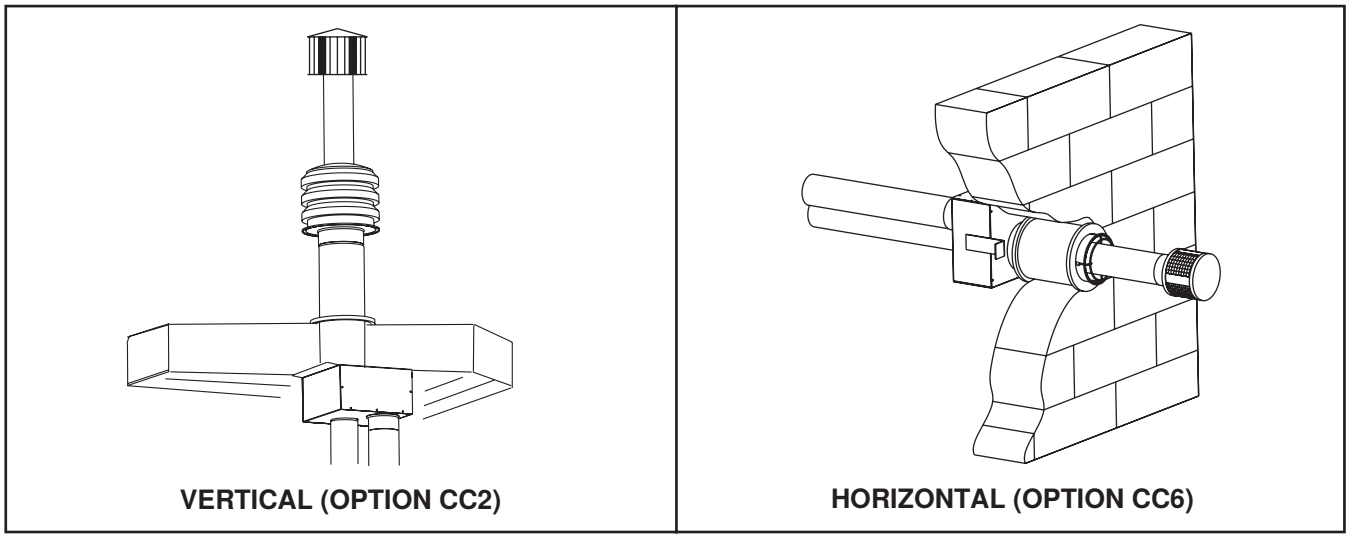

Figure 18. Vent Terminal Options

Vertical Vent Terminal (Option CC2) Installation

- Field-supplied components required for installation of the vertical vent kit are as follows:
  a. Vent and combustion air piping in accordance with **Table 9**
  b. Tapered vent pipe diameter reducers, as required
  c. Thimble (not required if wall is of non-combustible construction)
  d. Flashing
  e. Sheet metal screws, tape, and sealant, as required
- Factory-supplied components for installation of the vertical vent kit are listed in **Table 11**.

Table 11. Vertical Vent Terminal/Combustion Air Package (Option CC2) Components

PN	Description	Quantity
205896	Kit package	1
205885	Concentric adapter box (see **Figure 15**)	1
110052	Exhaust vent terminal assembly (see **Figure 19**)	1
53330	Combustion air inlet assembly (see **Figure 19**)	1
207232	Concentric adapter box bracket	2
53335	High-temperature silicone sealant, tube	1



EXHAUST VENT TERMINAL CAP



COMBUSTION AIR INLET

Figure 19. Option CC2 Components

⚠ DANGER ⚠

- **To prevent combustion products from entering the occupied space, all vent terminals must be positioned or located away from fresh air intakes, doors, and windows. Failure to comply could result in severe personal injury or death and/or property damage.**
- **Consider local snow depth conditions. The combustion air inlet must be at least 6 inches (152 mm) above the anticipated snow depth.**

1. Determine vent terminal location on roof:
   a. If more than one vertical vent terminal is being installed, minimum spacing between vent center lines is determined by minimum outdoor design temperature (coldest outdoor condition at installation site). Refer to **Table 12** to ensure that location complies with minimum outdoor design temperature requirements.

Table 12. Minimum Spacing Between Center Lines of Vertical Vent Pipes

Minimum Outdoor Design Temperature	Minimum Spacing Between Center Lines of Vertical Vent Pipes (Inches (mm))
≥31°F (≥0°C)	36 (914)
–10 to 30°F (–23 to –1°C)	60 (1524)
< –10°F (< –23°C)	84 (2134)

Venting/Combustion Air Connections—Continued

Vertical Vent Terminal (Option CC2) Installation—Continued

b. Select location away from fresh air intakes, allowing space for concentric adapter box inside. Vent terminal must be located away from adjacent buildings as shown in **Figure 20**.

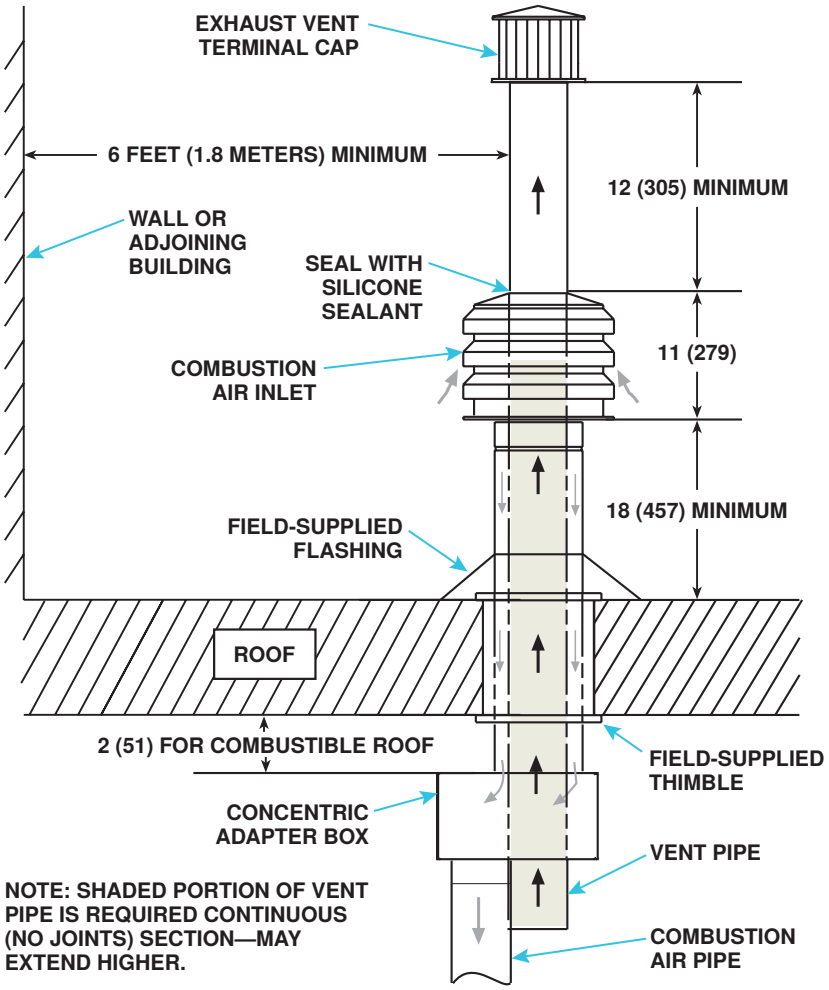

Figure 20. Option CC2 Installation

2. Install vent pipe and combustion air pipe runs:
   a. Connect piping to heater in accordance with specifications listed in **Specific Venting Requirements: Piping** and **Specific Venting Requirements: Venter Outlet and Combustion Air Inlet Connections** sections.
   b. Seal all joints in accordance with specifications listed in **Specific Venting Requirements: Joints and Sealing** section. Due to high temperature considerations, do not enclose exhaust pipe or place pipe closer than 6 inches (152 mm) to combustible material.
   c. Extend piping runs close to roof at location selected in step 1 and support piping in accordance with specifications listed in **Specific Venting Requirements: Support** section.

NOTE: The vent pipe will extend through the roof after the concentric adapter box is installed. The indoor combustion air pipe will end at the box.

3. Cut hole through roof for combustion air pipe:

a. Ensure that location and orientation of concentric adapter box are correct and mark and cut hole.

b. Ensure that hole accommodates 8-inch (203-mm) combustion air pipe. Thimble may be required depending on building construction and/or local codes. Larger diameter combustion air pipe serves as clearance for vent pipe on non-combustible construction.

4. Secure longer angles on concentric adapter box brackets (see **Figure 21**) to concentric adapter box.

NOTE: The longer angle of the concentric adapter box bracket has five 7/32-inch holes that allow the position of the bracket on the box to be adjusted. The shorter angle has three 7/32-inch holes that allow adjustment to construction.

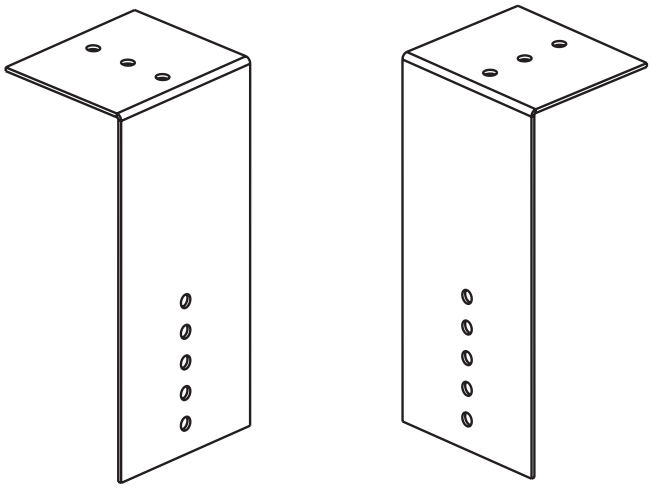

Figure 21. Concentric Adapter Box Brackets

5. Connect outside section of combustion air pipe to concentric adapter box (see **Figure 22**):

⚠ CAUTION ⚠

Ensure that length of combustion air pipe does not *exceed* 48 inches (1,219 mm) or does not extend *less than* 18 inches (457 mm) above roof.

a. Refer to **Figure 22** to determine length of dimension X as follows:

(1) Bracket length

(2) Plus roof thickness

(3) Plus anticipated snow depth

b. Second section of double-wall pipe (see dimension Y in **Figure 22**) may be connected as needed to continuous section of vent pipe. Ensure that connection is minimum of 3 inches (76 mm) above combustion air pipe and that height is 12 inches (305 mm) minimum—34 inches (864 mm) in cold climates where design ambient temperature is −10°F (−23°C) or lower.

c. Secure inlet air pipe to collar of concentric adapter box using sheet metal screws. Seal joint and seam using tape or sealant.

Venting/Combustion Air Connections—Continued

Vertical Vent Terminal (Option CC2) Installation—Continued

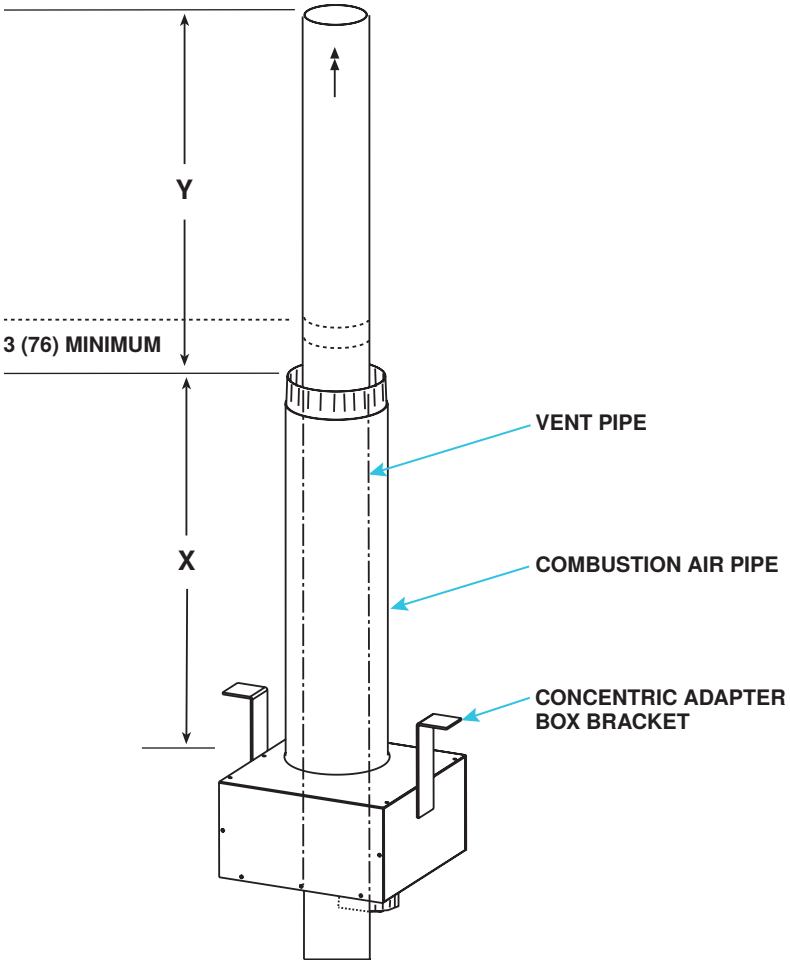

Figure 22. Combustion Air Pipe Installation

6. Secure concentric adapter box to underside of roof (see **Figure 22**):

⚠ CAUTION ⚠

- **If the roof is combustible, ensure that brackets are positioned to allow a 2-inch (51 mm) clearance between the concentric adapter box and the roof.**
- **If any holes are made in the concentric adapter box in error, ensure that they are sealed.**

a. Insert combustion air pipe through roof as shown in **Figure 23**.

b. Position concentric adapter box to match pipe runs and secure short angles of concentric adapter brackets (see **Figure 21**) to underside of roof using field-supplied hardware.

c. Install field-supplied flashing around combustion air pipe on roof outside.

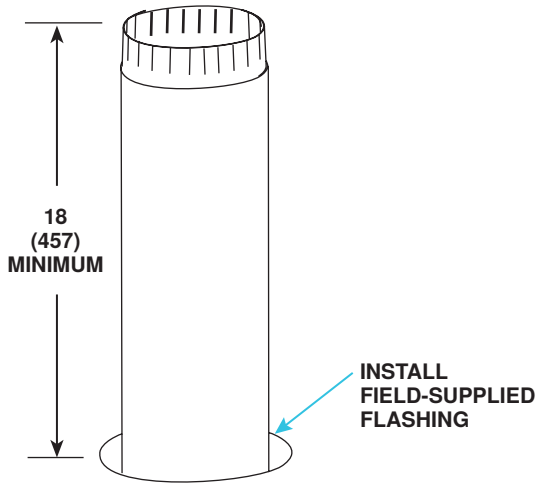

Figure 23. Combustion Air Pipe Through Roof

7. Install double-wall terminal vent pipe:

NOTE: The length of the vent pipe is determined by the installation within maximum and minimum requirements. The vent pipe extending through the box and the inlet air pipe must be one piece of double-wall vent pipe without joints.

a. Refer to **Figure 22** to determine lengths of each pipe segment and to calculate total length required. Determine mimimum length by adding requirements:
   (1) Starting at bottom, vent pipe can extend maximum of 6 inches (152 mm) below box
   (2) Plus 6 inches (152 mm) through box
   (3) Plus length of brackets above box
   (4) Plus width of roof
   (5) Plus height of outside combustion air pipe above roof
   (6) Plus mimimum of 3 inches (76 mm) beyond top of inlet air pipe
   (7) Total is mimimum length of vent pipe section—if actual piece of vent pipe is longer, extend it farther above combustion air pipe—do not extend it more than 6 inches (152 mm) below box

b. Ensure that double-wall terminal vent pipe is in proper direction and slide end of pipe into box and out through combustion air pipe. Position vent pipe to lengths determined above.

NOTE: The double-wall vent pipe does not attach to the box. The installer must provide support.

c. Connect double-wall vent pipe to single-wall or Category III vent pipe run using tapered reducer in accordance with **Figure 14**.

d. Seal completely around circumference of pipe and opening of box using silicone sealant.

8. Install combustion air inlet (see **Figure 24**):

⚠ CAUTION ⚠

The combustion air inlet must be at least 6 inches (152 mm) above the anticipated snow depth.

Venting/Combustion Air Connections—Continued

Vertical Vent Terminal (Option CC2) Installation—Continued

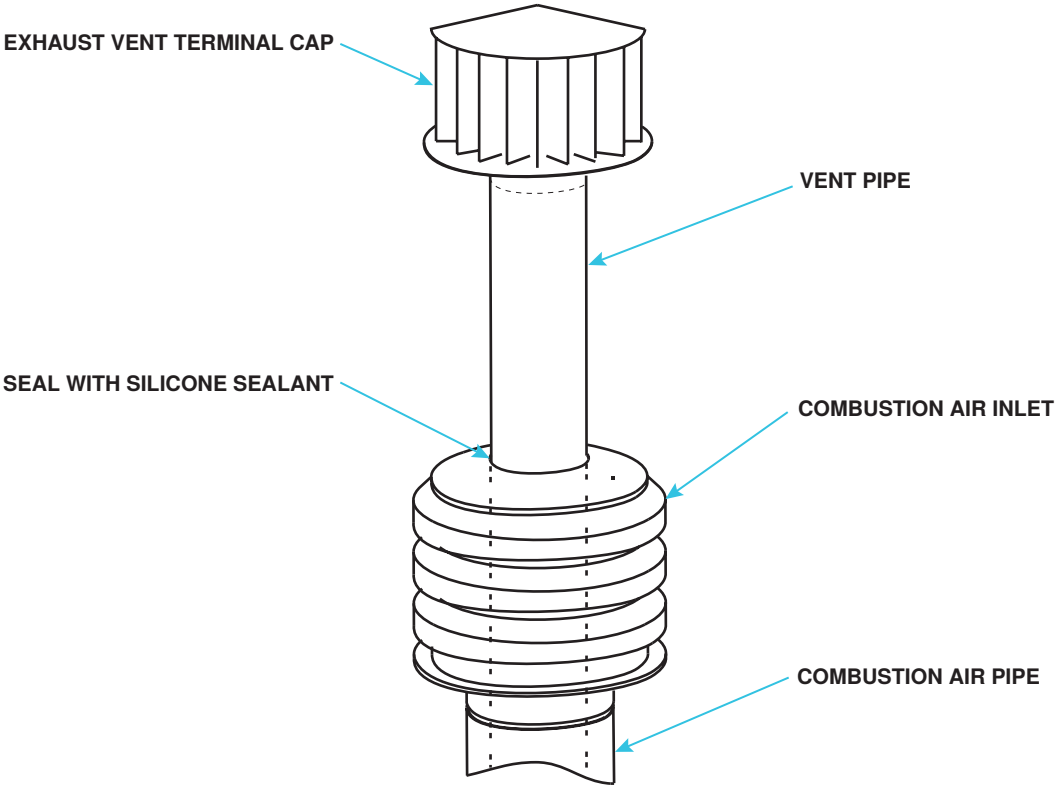

Figure 24. Combustion Air Inlet and Vent Terminal Installation

a. Install additional section of vent pipe on outside if needed and make joint in accordance with pipe manufacturer's requirements.

b. With vent pipe at required height, slide combustion air inlet over vent pipe and fasten collar to combustion air pipe using sheet metal screws.

c. Seal opening at top between vent pipe and combustion air inlet to prevent water leakage using silicone sealant.

⚠ CAUTION ⚠

In cold climates where the design ambient temperature is −10°F (−23°C) or lower, the minimum height of the exhaust vent terminal cap above the combustion air inlet is 24 inches (610 mm).

9. Install exhaust vent terminal (see **Figure 24**) in accordance with **Figure 13**.
10. Install indoor combustion air pipe:
    a. Secure single-wall combustion air pipe run to collar on concentric adapter box using sheet metal screws. If using 7-inch piping (unit sizes 200–400), install tapered reducer.
    b. Seal pipe joints with tape or sealant.
11. Verify compliance with **Figure 20** and with all specific venting requirements listed above.

Horizontal Vent Terminal (Option CC6) Installation

- Field-supplied components required for installation of the horizontal vent kit are as follows:
  a. Vent and combustion air piping in accordance with **Table 9**
  b. Tapered vent pipe diameter reducers, as required
  c. Thimble (not required if wall is of non-combustible construction)
  d. Flashing
  e. Sheet metal screws, tape, and sealant, as required
- Factory-supplied components for installation of the horizontal vent kit are listed in **Table 13**.

Table 13. Horizontal Vent Terminal/Combustion Air Package (Option CC6) Components

PN	Description	Quantity
205883	Kit package	1
205885	Concentric adapter box (see **Figure 15**)	1
53316	Assembly, screened exhaust (see **Figure 25**)	1
205894	Inlet guard (see **Figure 25**)	1
37661	Screw, sheet metal, #10-16 × 1/2	4
207232	Concentric adapter box bracket	2
53335	High-temperature silicone sealant, tube	1

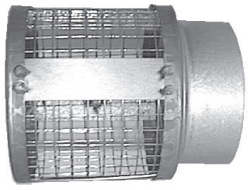

SCREENED EXHAUST ASSEMBLY

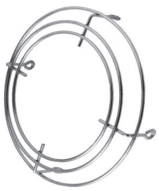

INLET GUARD

Figure 25. Option CC6 Components

⚠ DANGER ⚠

- **To prevent combustion products from entering the occupied space, all vent terminals must be positioned or located away from fresh air intakes, doors, and windows. Failure to comply could result in severe personal injury or death and/or property damage.**
- **In climates with below freezing temperatures, condensate may form icicles on the vent terminal. Locate the terminal where falling icicles do not present a hazard.**
- **Consider local snow depth conditions. The vent must be at least 6 inches (152 mm) above the anticipated snow depth.**

1. Determine vent terminal location on outside wall:
   a. Refer to **Table 9** to ensure that location complies with vent length requirements.
   b. For most applications, ensure that vent terminal is level with heater mounting height.
   c. Allow downward pitch of 1/4-inch per foot (6 mm per 305 mm) for condensate drain.

Venting/Combustion Air Connections—Continued

Horizontal Vent Terminal (Option CC6) Installation—Continued

⚠ WARNING ⚠

Avoid positioning the vent terminal above a walkway as there may be a small amount of condensate that drips from the end of the vent/combustion air terminal. In cold climates, the condensate may form ice.

d. Ensure that distance of vent terminal from adjacent public walkways and buildings and window and building openings complies with local codes. Absent any local codes, distance must comply with *National Fuel Gas Code* Z223.1.

⚠ CAUTION ⚠

Products of combustion can cause discoloration of some building finishes and deterioration of masonry materials. A clear silicone sealant normally used to protect concrete driveways may be used to protect masonry materials from discoloration and deterioration. If discoloration is an esthetic problem relocate the vent or install a vertical vent.

e. Refer to **Table 14** to ensure that location complies with minimum clearance requirements.

Table 14. Minimum Clearance Requirements for Horizontal Vent Terminal

Component/Structure	Minimum Clearance, All Directions Unless Specified (Feet (Meters))
Forced air inlet within 10 feet (3.1 meters)*	3 (0.9) above
Combustion air inlet of another appliance	6 (1.8)
Mechanical air supply inlet to any building	Canada: 6 (1.8)
Any building opening (door, window, or gravity air inlet)	4 (1.2) horizontal and below
	1 (0.3) above
Gas meter,** electric meter, and relief equipment	US: 4 (1.2) horizontal
	Canada: 6 (1.8) horizontal
Gas regulator**	US: 3 (0.9) horizontal
	Canada: 6 (1.8) horizontal
Adjoining building or parapet	6 (1.8)
Adjacent public walkway	7 (2.1) above
Grade (ground level)	3 (0.9) above
*Does not apply to the inlet of a direct vent appliance.	
**Do not terminate the vent directly above a gas meter or service regulator.	

2. Install vent pipe and combustion air pipe runs:
   a. Connect piping to heater in accordance with specifications listed in **Specific Venting Requirements: Piping** and **Specific Venting Requirements: Venter Outlet and Combustion Air Inlet Connections** sections.
   b. Seal all joints in accordance with specifications listed in **Specific Venting Requirements: Joints and Sealing** section.

⚠ CAUTION ⚠

Due to high temperature considerations, do not enclose exhaust pipe or place pipe closer than 6 inches (152 mm) to combustible material.

c. Extend piping runs close to wall location selected in step 1 and support piping in accordance with specifications listed in **Specific Venting Requirements: Support** section.

3. Cut hole through outside wall for combustion air pipe.
   a. Ensure that outside wall construction thickness is between 1 inch (25 mm) minimum and 48 inches (1,219 mm) maximum.
   b. Ensure that hole accommodates 8-inch (203-mm) combustion air pipe. Thimble may be required depending on building construction and/or local codes. Larger diameter combustion air pipe serves as clearance for vent pipe on noncombustible construction.

NOTE: The longer angle of the concentric adapter box bracket has five 7/32-inch holes that allow the position of the bracket on the box to be adjusted. The shorter angle has three 7/32-inch holes that allow adjustment to construction.

4. Secure longer angles onconcentric adapter box brackets (see **Figure 26**) to concentric adapter box.

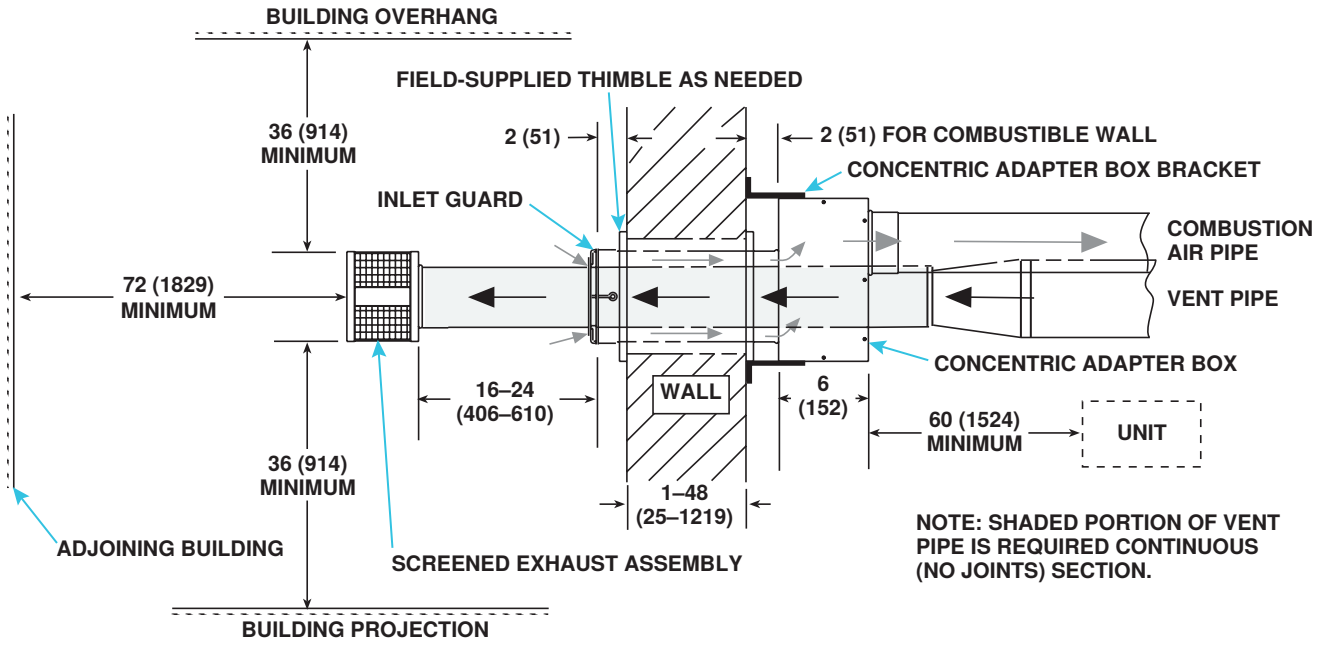

Figure 26. Option CC6 Installation

5. Connect outside section of combustion air pipe to concentric adapter box (see **Figure 26**):
   a. Determine length of combustion air pipe as follows:
      (1) Bracket length from box to wall
      (2) Plus wall thickness
      (3) Plus 2 inches (51 mm) beyond wall
   b. Secure inlet air pipe to collar of concentric adapter box using sheet metal screws. Seal joint and seam using tape or sealant.
6. Secure concentric adapter box to wall (see **Figure 26**):

⚠ CAUTION ⚠

- **If the wall is combustible, ensure that brackets are positioned to allow a 2-inch (51 mm) clearance between the concentric adapter box and the wall.**
- **If any holes are made in the concentric adapter box in error, ensure that they are sealed.**

   a. Insert combustion air pipe out through wall.
   b. Secure short angles (see **Figure 21**) of concentric adapter box brackets to wall.
   c. Seal or flash inlet air pipe on outside using sealant and/or field-supplied flashing.

Venting/Combustion Air Connections—Continued

Horizontal Vent Terminal (Option CC6) Installation—Continued

7. Install inlet guard:
   a. Position inlet guard over end of combustion air pipe in accordance with **Figure 26**.
   b. Secure air inlet guard to inlet air pipe using four 1/2-inch-long screws provided.

NOTE: If vent pipe is inserted from outside, the exhaust cap may be attached before the double-wall vent pipe is installed. If cap is attached first, ensure that the baffle strips are positioned correctly when attaching the vent terminal pipe to the vent run (refer to step 8d below).

8. Install double-wall terminal vent pipe:

NOTE: The length of the vent pipe is determined by the installation within maximum and minimum requirements. The vent pipe extending through the box and the inlet air pipe must be one piece of double-wall vent pipe without joints.

   a. Refer to **Figure 26** to determine lengths of each pipe segment and to calculate total length required. Transition to single-wall or Category III vent pipe run must be made maximum of 6 inches (152 mm) from heater side of box.
   b. Ensure that double-wall terminal vent pipe is in proper direction and slide end of pipe through box. Position pipe so that it will extend between 16–24 inches (406–610 mm) past end of combustion air pipe and no more than 6 inches (152 mm) out of box toward heater.

NOTE: The double-wall vent pipe does not attach to the box. The installer must provide support.

   c. Connect 5-inch double-wall vent pipe to 6- or 7-inch single-wall or Category III vent pipe run using tapered reducer (see **Figure 14**).
   d. Ensure that screened exhaust assembly is aligned so that its baffles are positioned at 12, 3, 6, and 9 o'clock (see **Figure 26**). Install screened exhaust in accordance with **Figure 13**.
   e. Ensure that double-wall section of vent pipe has slight downward drop of 1/4-inch per foot (6 mm per 305 mm) toward vent terminal end.
   f. Seal completely around circumference of pipe and opening of box using silicone sealant.
9. Install indoor section of combustion air pipe:
   a. Secure single-wall combustion air pipe run to collar on concentric adapter box using sheet metal screws. If using 7-inch piping (unit sizes 200–400), install tapered reducer.
   b. Seal pipe joints with tape or sealant.
10. Verify compliance with **Figure 26** and with all specific venting requirements listed above.

Piping Connections

Gas Supply Pressure

- The unit is equipped for a maximum gas supply pressure of 1/2 psi, 3.5 kPa, or 14 IN WC for natural gas or propane. The minimum supply pressure, as measured while the unit is operating at full fire, is 5 IN WC (6 IN WC for unit sizes 350 and 400 with electronic modulation) for natural gas or 11 IN WC for propane.
- Supply pressure higher than 1/2 psi requires the installation of an additional service regulator external to the unit.
- **Pressure testing supply piping:** For test pressures ***above*** 1/2 psi, disconnect the heater and manual valve from the gas supply line to be tested and cap or plug the supply line. For test pressures ***below*** 1/2 psi, before testing, close the manual valve on the heater.

Gas Supply Piping

⚠ DANGER ⚠

- **All components of a gas supply system must be leak tested prior to placing equipment in service. NEVER TEST FOR LEAKS WITH AN OPEN FLAME. Failure to comply could result in personal injury, property damage, or death.**
- **Pipe joint compounds (pipe dope) shall be resistant to the action of liquefied petroleum gas or any other chemical constituents of the gas being supplied.**

⚠ CAUTION ⚠

- **All piping must be in accordance with requirements outlined in the *National Fuel Gas Code* (ANSI/ Z223.1, latest edition) or the *Natural Gas and Propane Installation Code* (CSA B149.1, latest edition).**
- **Gas supply piping installation shall conform with good practice and with local codes.**
- **Support gas piping with pipe hangers, metal strapping, or other suitable material. DO NOT rely on the heater to support the gas pipe.**

- The heater is orificed for operation with natural gas having a heating value of 1,000 (±50) BTU per cubic foot or with propane gas having a heating value of 2,550 (±100) BTU per cubic foot. Sizing of gas supply lines depends on piping capacity and is based on cubic feet per hour based on a 0.3 IN WC pressure drop, a 0.6 specific gravity for natural gas at 1,000 BTU per cubic feet, and a 1.6 specific gravity for propane at 2,550 BTU per cubic feet. If the gas at the installation does not meet this specification, consult the factory for proper orificing.
- Variables for sizing gas supply lines are listed in **Table 15**. When sizing supply lines, consider the possibility of future expansion and increased requirements. Refer to the *National Fuel Gas Code* for additional information on line sizing.

Table 15. Gas Supply Line Sizes

Pipe Length (Feet)	Natural Gas						Propane					
	Pipe Diameter (Inches)											
	1/2	3/4	1	1-1/4	1-1/2	2	1/2	3/4	1	1-1/4	1-1/2	2
	Cubic Feet per Hour											
20	92	190	350	730	1100	2100	56	116	214	445	671	1281
30	73	152	285	590	890	1650	45	93	174	360	543	1007
40	63	130	245	500	760	1450	38	79	149	305	464	885
50	56	115	215	440	670	1270	34	70	131	268	409	775
60	50	105	195	400	610	1105	31	64	119	244	372	674
70	46	96	180	370	560	1050	28	59	110	226	342	641
80	43	90	170	350	530	990	26	55	104	214	323	604
90	40	84	160	320	490	930	24	51	98	195	299	567
100	38	79	150	305	460	870	23	48	92	186	281	531
125	34	72	130	275	410	780	21	44	79	168	250	476
150	31	64	120	250	380	710	19	39	73	153	232	433
175	28	59	110	225	350	650	17	36	67	137	214	397
200	26	55	100	210	320	610	16	34	61	128	195	372

Piping Connections—Continued

Supply Piping Connections

NOTE: The *National Fuel Gas Code* requires the installation of a minimum 3-inch sediment trap with a drip leg. Local codes may require a sediment trap longer than 3 inches (typically 6 inches). To permit burner removal, this sediment trap must extend beyond the edge of the heater.

Connect the gas supply piping as follows (see **Figure 27**):

1. Make 1/2-inch gas connection (3/4-inch for unit size 300, 350, and 400 natural gas units) at pipe nipple that extends outside cabinet using ground joint union.
2. Seal opening for gas supply pipe with grommet provided.
3. Install manual shutoff valve upstream of unit control system. Manual shutoff valve's 1/8-inch plugged tapping provides connection for supply line pressure test gauge.
4. Install minimum 3-inch sediment trap (typically 6 inches).
5. Bleed trapped air from gas lines as needed.
6. Leak test all connections using leak detecting solution.

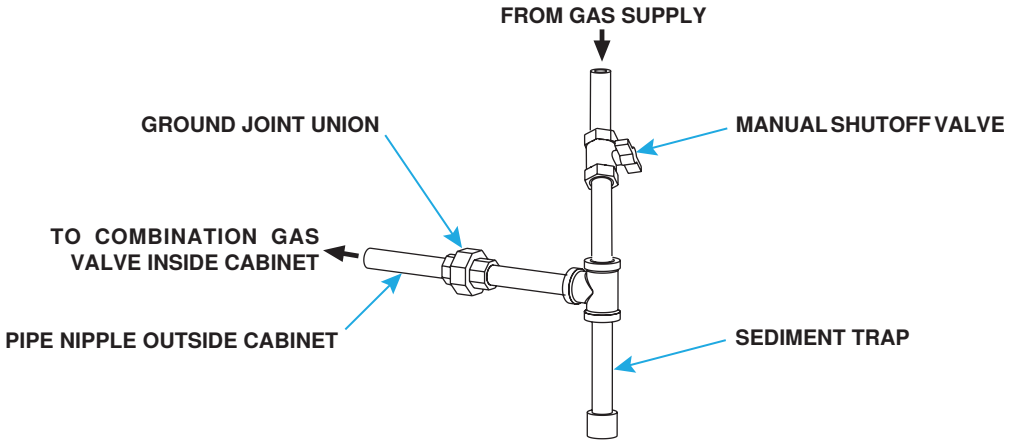

Figure 27. Gas Connections

Condensate Drain Kit (Option CS1) Installation

A furnace installed downstream from a refrigeration or makeup air system requires a condensate drain to dispose of any condensation that may form. Install the condensate drain kit as follows:

1. Using waste nut (see **Figure 28**) as template, drill three holes—one 3/4-inch drain hole and two 1/4-inch fastener holes in furnace cabinet's bottom pan.

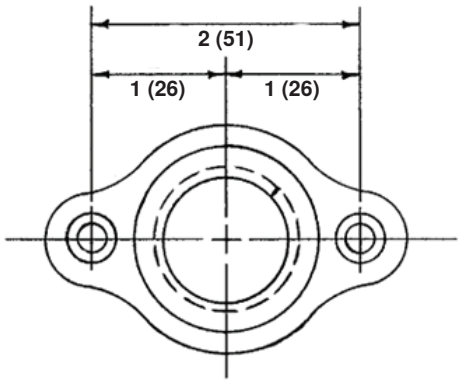

Figure 28. Waste Nut

2. Apply RTV sealant from kit to waste nut and bottom pan and secure waste nut to bottom pan using two machine screws and hex nuts from kit.

NOTE: A 4-inch (102-mm) minimum clearance is required under the furnace if a 90-degree elbow is used.

3. Thread 3/4-inch field-supplied PVC drain pipe into waste nut and terminate drain outside of building. Provide trap to prevent air from entering combustion zone.
4. Seal drain pipe and corners and openings in bottom pan using RTV sealant.

NOTE: Periodic cleaning of the condensate collector and disposal system is required.

Electrical Connections

⚠ CAUTION ⚠

- **Ensure that all wiring is in accordance with the wiring diagram provided with the unit.**
- **All electrical wiring and connections, including electrical grounding, MUST BE made in accordance with local, state, and national codes and regulations and with the *National Electric Code* (ANSI/ NFPA 70 , latest edition) or, in Canada, the *Canadian Electric Code* (Part 1, CSA C.22.1 , latest edition). In addition, the installer should be aware of any local ordinances or gas company requirements that apply.**
- **If any of the original wire as supplied with the appliance must be replaced, it MUST BE replaced with wiring material having a temperature rating of at least 220°F (105°C), except for the sensor lead and the optional bypass damper combustion air safety circuit (option AG39 or AG40) wires, which MUST BE rated at 302°F (150°C).**

NOTE: Electrical options are identified on the wiring diagram. Refer to separate instruction sheets for any optional equipment provided.

Supply Wiring

- Check the rating plate on the heater for the supply voltage and for current requirements. A separate line voltage supply with fused disconnect switch should be run directly from the main electrical panel to the unit, making connections in the junction box.
- A disconnect switch is available as optional equipment or may be provided locally. When installing the disconnect switch, ensure that the conduit and switch housing are clear of all service panels. Allow at least 4 feet (1.2 meters) of service room between the disconnect switch and any removable service panels. When providing or replacing fuses in a fusible disconnect switch, use dual-element time delay fuses sized at 1.25 × maximum total input amps.
- Seal all electrical entrance openings with field-supplied bushings (see **Figure 1**). Refer to **Table 16** for field-supplied wiring sizes—from disconnect to electrical box—for connection to the motor contactor or starter.

Table 16. Field-Supplied Wiring Sizes

Voltage/Phase	Motor HP	Wire Gauge	BX Cable
120/1	1/4– 1/2	14	3/8
208–230/1	1	12	3/8
	1–1-1/2	14	3/8
208–230/3	1/4–3	14	3/8
460/3	5	12	3/8
	1/4–5	14	3/8
575/3	1/2–5	14	3/8

Electrical Connections—Continued

Control Wiring

The heater is equipped with a low-voltage (24V) control circuit.

Table 17. Field-Supplied Control Wiring Sizes

Distance from Unit to Control (Feet (Meters))	Minimum Recommended Wire Gauge (AWG)	Total Wire Length (Feet (Meters))
75 (23)	#18	150 (46)
125 (38)	#16	250 (76)
175 (53)	#14	350 (107)

Table 18. Amp Ratings of 24V Optional Controls

Control	Ampere Rating (Amps)
Fan control coil	0.12
Time delay heater	0.14
RBM relay coil	0.12
Contactor coil	0.45
Spark ignition system	0.10
Maxitrol gas control system	0.51
Honeywell gas valve	0.50
White-Rodgers gas valve	0.60

CONTROLS

Standard Controls

Combustion Air Proving Switch

⚠ DANGER ⚠

Safe operation requires proper venting flow. Never bypass the combustion air proving switch or attempt to operate the unit without the venter running and proper flow in the vent system. Hazardous conditions could result.

- The combustion air proving switch ensures that proper combustion airflow is available. The switch is a single-pole, double-throw switch that senses pressure caused by the flow of combustion air from the venter. The switch is designed to close when a decreasing pressure is sensed in the outlet duct of the gas collection box.
- At startup when the furnace is cold, the sensing pressure is at the most negative level. As the furnace and the flue system warm up, the sensing pressure becomes less negative. After the system has reached equilibrium (approximately 20 minutes), the sensing pressure levels off. If a restriction or if excessive flue length or turns cause the sensing pressure to become less than the switch setpoint, the pressure switch will function to shut off the main burners. The main burners will remain off until the system has cooled and/or the flue system resistance is reduced. Refer to **Table 19** for approximate water column negative pressure readings and combustion air proving switch setpoints for sea level operating conditions.

Table 19. Combustion Air Proving Switch Settings at Sea Level Operating Conditions

Option AG39 or AG40?	Unit Size (MBTUh)	Factory Setpoint	Startup Cold	Equilibrium
NO	All	–0.58 (±0.05) IN WC	–1.0 IN WC	–0.70 IN WC
YES	100–225	–0.80 (±0.05) IN WC	–1.30 (±0.20) IN WC	–1.05 (±0.10) IN WC
	250, 300, 400	–0.70 (±0.05) IN WC	–1.20 (±0.20) IN WC	–0.95 (±0.10) IN WC

Combination Gas Valve

⚠ WARNING ⚠

The combination gas valve is the prime safety shutoff. To ensure positive closure, all gas supply lines must be free of dirt or scale before connecting them to the unit.

All furnaces are equipped with a 24V combination gas valve that includes the automatic electric ON/OFF valve controlled by the room thermostat, the pressure regulator, the safety pilot valve, and the manual shutoff valve. The standard combination gas valve allows for single-stage control from a single-stage, 24V thermostat.

Blower Fan Control

NOTE: To replace the blower fan control on units manufactured *before* NOV 2004, a replacement kit (PN 209184) is required.

The field-supplied blower fan is controlled as follows:

- After the gas valve opens, there is a time delay of blower fan operation to prevent the discharge of cold air.
- Blower fan operation continues after the thermostat is satisfied, as determined by the fan time delay.
- To ensure that the blower fan can continue to operate, the power supply to the furnace MUST NOT be interrupted except for when servicing the unit.

NOTE: If the customer wants the furnace off at night, the gas valve circuit SHOULD BE OPENED by a single-pole switch wired in series with the thermostat. Some thermostats are provided with this feature. Multiple units controlled from a single thermostat are shut off in the same manner. For proper operation, ensure that the blower fan control is wired correctly.

Limit Control

All units are equipped with an automatic, non-adjustable, reset limit control that acts to interrupt the electric supply to the redundant main operating valve in case of motor failure or lack of airflow due to restrictions at the inlet or outlet.

Pilot and Ignition Systems

⚠ WARNING ⚠

Due to high voltage on the pilot spark wire and pilot electrode, do not touch when energized.

- **Pilot:** All pilots are vertical, target-type with a lint-free feature. Pilot flame should be approximately 1-1/4 inches in length. Pilot gas pressure should be the same as the supply line pressure. Pilot gas is supplied through the combination valve. Pilot gas flow is controlled by an adjustment screw located in the valve body. For maintenance, refer to **Burner Rack Maintenance** and **Cleaning Pilot and Burners** sections.
- **Ignition system:** Natural gas units are equipped with a spark-ignited intermittent safety pilot system that shuts off the pilot gas flow between heat cycles. Propane units (or as an option on natural gas units) require a lockout device that stops the gas flow to the pilot if the pilot fails to light in 120 seconds. The lockout device has a 1-hour retry or can be manually reset by interruption of the thermostat circuit. Refer to the wiring diagram provided with the unit for pilot system identification and proper wiring. Pilot with lockout is option AH3. Spark pilot without lockout is option AH2.

Standard Controls—Continued

Pilot and Ignition Systems—Continued

- **Ignition controller:** As part of the intermittent safety pilot system, the ignition controller provides high voltage spark to ignite pilot gas and also acts as the flame safety device. After ignition of the pilot gas, the ignition controller electronically senses the pilot flame. A low voltage DC electrical signal is imposed on the separate metal probe in the pilot assembly. The metal probe is electrically insulated from ground. The pilot flame acts as a conduction path to ground to complete the DC circuit and prove pilot flame. Proper operation of the electronic spark ignition system requires a minimum flame signal of 0.2 microamps, as measured by a microampmeter. With pilot flame proven, the ignition controller energizes the main gas valve.

Burners, Burner Orifices, and Carryover System

NOTE: Natural gas units have a dual flash carryover system and do not require a carryover orifice.

- **Burners:** Individually-formed steel burners capable of operating on either natural or propane gas are used in this heater. These burners have accurate, machine-formed ports to provide controlled flame stability and operation without lifting or flashback. All burners are lightweight and are factory-mounted in an assembly that permits all of the burners to be removed as a unit for inspection or service.
- **Burner orifices:** Heaters are shipped with burner orifices of proper size and type for the specified gas. Refer to **Table 20** for burner and carryover orifice specifications.

Table 20. Burner and Carryover Orifice Specifications

Unit Size	Burner Orifice					Carryover Orifice	
	Quantity	Natural Gas		Propane Gas		Propane Gas	
		PN	Drill Size	PN	Drill Size	PN	Drill Size
100	4	11792	#41	61652	1.45 mm	9870	#70
125	5	84437	#42	61652	1.45 mm	9870	#70
150	7	11833	#44	11830	#55	9680	#65
175	7	84437	#42	61652	1.45 mm	9680	#65
200	9	11828	#43	11830	#55	9680	#65
225	9	84437	#42	61652	1.45 mm	9680	#65
250	12	11833	#44	11830	#55	10370	#59
300	12	84437	#42	61652	1.45 mm	10370	#59
350	14	84437	#42	61652	1.45 mm	9791	#56
400	16	84437	#42	61652	1.45 mm	9791	#56

- **Burner Carryover Systems:** All natural gas burners, except when equipped with electronic modulation option AG39 or AG40, are equipped with two flash carryover systems—one on each end of the burner rack.

NOTE: Natural gas burner racks on furnaces manufactured before *before s*eries 6 units have a gas lighter tube carryover and one flash carryover. All propane gas burners are equipped with one flash carryover and a regulated gas tube system. The carryover lighter tube receives its gas supply through a regulator simultaneously with the gas to the burner orifices.

- During regular service, check the main burner ports, the carryover assemblies, and the orifices for cleanliness.
- Typical natural gas and propane gas burner racks are shown in **Figure 29**.

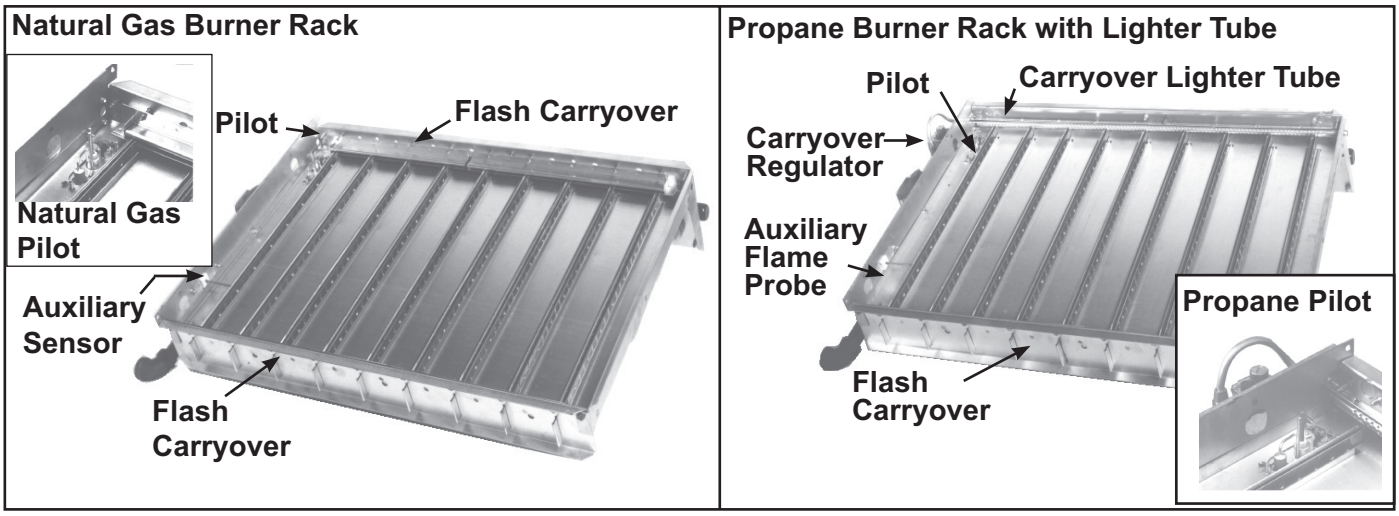

Figure 29. Typical Burner Rack with Pilot

Optional Controls

NOTE: Refer to the wiring diagram provided with the unit for proper wiring connections.

Thermostat

⚠ CAUTION ⚠

Control circuit amps should be within the anticipator amp rating of the thermostat used.

- A thermostat is not provided with the furnace. Use either an optional or a field-provided low-voltage (24V) thermostat. Install the thermostat according to the manufacturer's instructions.
- A low-voltage thermostat is equipped with a heat anticipator that levels out unit cycling for optimum temperature control. Set the anticipator at 1.0 amps for standard controls.

Two-Stage Heating Control (Options AG2)

The standard combination control valve is replaced with a two-stage combination gas control valve providing for low fire or high fire operation controlled by a two-stage thermostat. The first stage (low fire) is factory-set (not field-adjustable). Both low fire and high fire stages are controlled by a Servo regulator that maintains constant gas input under wide variations in gas supply pressure. Refer to the instructions provided with the unit for gas valve specifications, wiring, and operating instructions.

Two-Stage Makeup Air Control (Options AG3 and AG15)

Two-stage makeup air units are equipped with a two-stage gas valve, but instead of control from a two-stage room thermostat, the outlet air temperature is monitored and controlled by a two-stage ductstat. When discharge air temperature drops to the setpoint, low fire is energized. If low fire cannot satisfy the ductstat setting, high fire is energized. Makeup air applications are usually adjusted to maintain discharge air temperature between 65°F (18.3°C) and 75°F (23.9°C). In all applications, the allowable temperature rise of the furnace in the installation dictates the limits of the ductstat temperature setting. Depending on the option selection, the sensor is either connected by capillary tubing to the unit-mounted ductstat or electrically-connected to a remote temperature selector. Refer to the **Discharge Air Temperature Sensor Installation** section for instructions on locating the sensor in the ductwork.

Optional Controls—Continued

Two-Stage Heating Control (Options AG2)—Continued

- **Ductstat with capillary tubing (option AG3):** The unit-mounted ductstat (see **Figure 30**) has an adjustable range of 0°F to 100°F (–17.8°C to 37.8°C) with a fixed differential of 3°F (1.7°C). The sensor is factory-set at 70°F (21.1°C). Due to different CFM settings and outside air temperatures, the average downstream outlet temperature may not match the ductstat setting exactly. After the installation is complete, adjust the setpoint of the ductstat to achieve the desired average outlet air temperature.

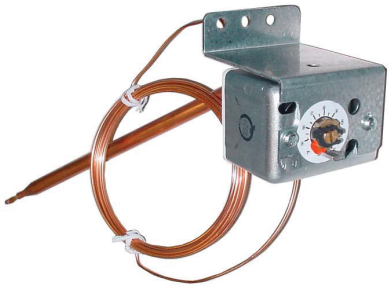

Figure 30. Unit-Mounted Ductstat

- **Ductstat with electronic remote temperature selector (option AG15):** Follow the wiring diagram provided with the unit and the manufacturer's instructions for wiring and installing the WiFi-capable remote temperature selector (see **Figure 31**). An expansion module is available as needed. After the installation is complete, adjust the selector to achieve the desired average outlet air temperature.



Figure 31. Remote Temperature Selector

Electronic Modulation (Options AG7, AG8, AG9, AG21, AG39, and AG40)

NOTE: Unit sizes 350 and 400 with electronic modulation require a minimum natural gas supply pressure of 6 IN WC. Options AG39 and AG40 are available only with natural gas and are not available on unit size 350.

- The type and capability of the electronic modulation system, depend on the option selected. Depending on heat requirements established by the thermistor sensor, the burner modulates between 100% and 50% firing. The thermistor is a resistor that is temperature sensitive in that as the surrounding temperature changes, the resistance (ohms) changes through the thermistor. This change is monitored by the solid-state control center (amplifier), which provides a varying DC current to the modulating valve to adjust the gas input. Each modulating valve is basically a regulator with electrical means of raising and lowering discharge pressure. When no DC current is available to this device, it functions as a gas pressure regulator that supplies 3.5 IN WC pressure to the main operating valve. Refer to the **Discharge Air Temperature Sensor Installation** section for instructions on locating the sensor in the ductwork.
- **Electronic modulation between 50% and 100% firing rate (option AG7):** Electronic modulation for heating that is controlled by a specially-designed room thermostat (60–85°F (15.6–29.4°C)).

NOTE: Control wires connected to a Selectrastat, a discharge air sensor, a remote temperature selector or sensor, an amplifier, or the valve must not be run close to or inside conduit with power or ignition wires. Doing so may cause the unit to function erratically or may destroy the amplifier. If shielded wires are used, shield must be insulated and grounded at the amplifier location only.

- **Electronic modulation between 50% and 100% firing rate (option AG8):** Electronic modulation for makeup air application that is controlled by a duct sensor and temperature selector (55–90°F (12.8–32.2°C)). The temperature selector setting for option AG8 is on the amplifier (see **Figure 32**). Option AG8 is available with an override thermostat.



AMPLIFIER

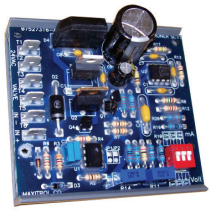

SIGNAL CONDITIONER

Figure 32. Maxitrol Amplifier and Signal Conditioner

- **Electronic modulation between 50% and 100% firing rate (option AG9):** Electronic modulation for makeup air application that is controlled by a duct sensor and temperature selector (55–90°F (12.8–32.2°C)). Option AG9 has a remote temperature selector and an override thermostat.
- **Electronic modulation between 50% and 100% firing rate (option AG21):** With option AG21, the furnace is equipped with a Maxitrol signal conditioner (see **Figure 32**) that operates much the same way as the amplifier above to control the regulator valve. The signal conditioner accepts an input signal of either 4–20 milliamps or 0–10V from a customer-supplied control device such as a computer. With the dip switches on the conditioner positioned to ON, the conditioner accepts a 4–20 milliamp signal. With the dip switches on the conditioner positioned to OFF, the conditioner accepts a 0–10V signal. The conditioner converts the signal to the 0–20V DC current required to control the modulating valve.
- **Electronic modulation between 20–28% and 100% firing rate (option AG39):** Depending on its size, a furnace equipped with option AG39 has a 20–28% turndown ratio. The furnace will ignite at any input rate in the available range and will maintain average thermal efficiencies equal to or greater than the thermal efficiency at full fire. The gas train (see **Figure 33**) includes a single-stage gas valve, a modulating valve, and two gas pressure switches. The burner rack is equipped with one flash carryover and a regulated gas lighter tube system. The carryover lighter tube receives its gas supply through the regulator simultaneously with the gas to the burner. Control of the system is through a Maxitrol amplifier (see **Figure 32**) with a corresponding remote temperature dial. The gas supply (refer to pressure requirements in **Table 21**) connects to the single-stage gas valve. To compensate for additional pressure loss through the modulating valve, the single-stage gas valve has a custom outlet pressure setting higher than when it is used on a standard gas manifold. The pilot tubing connects to the pilot port on the single-stage gas valve. When the valve receives a call for heat from the amplifier and pilot is established, gas flow from the single-stage valve goes to both the modulating valve and the regulated lighter tube system. When the signal from the amplifier to the modulating valve requires less-than-high fire operation, the modulating valve functions to lessen the gas flow to the burner to reduce the input rate to that which is necessary to maintain the desired temperature. When the input rate is reduced enough to decrease the gas pressure to 1.1 IN WC, the primary gas pressure switch in the manifold activates the gear motor that controls the bypass damper in the venter/combustion air system. The bypass damper opens to divert some of the incoming air directly into the flue duct to reduce air flow through the burner. Safety switches monitor the position of the bypass damper. When the gas pressure rises to >1.1 IN WC, the bypass damper closes. This uniquely-designed modulation system requires combustion air pressure settings different from the standard system. Refer to **Table 19** for the approximate combustion air proving switch settings at sea-level operation. Refer to the **Troubleshooting Bypass Combustion Air Damper Safety Circuit on Units with Option AG39 or AG40** section for troubleshooting.

Optional Controls—Continued

Electronic Modulation (Options AG7, AG8, AG9, AG21, AG39, and AG40)—Continued

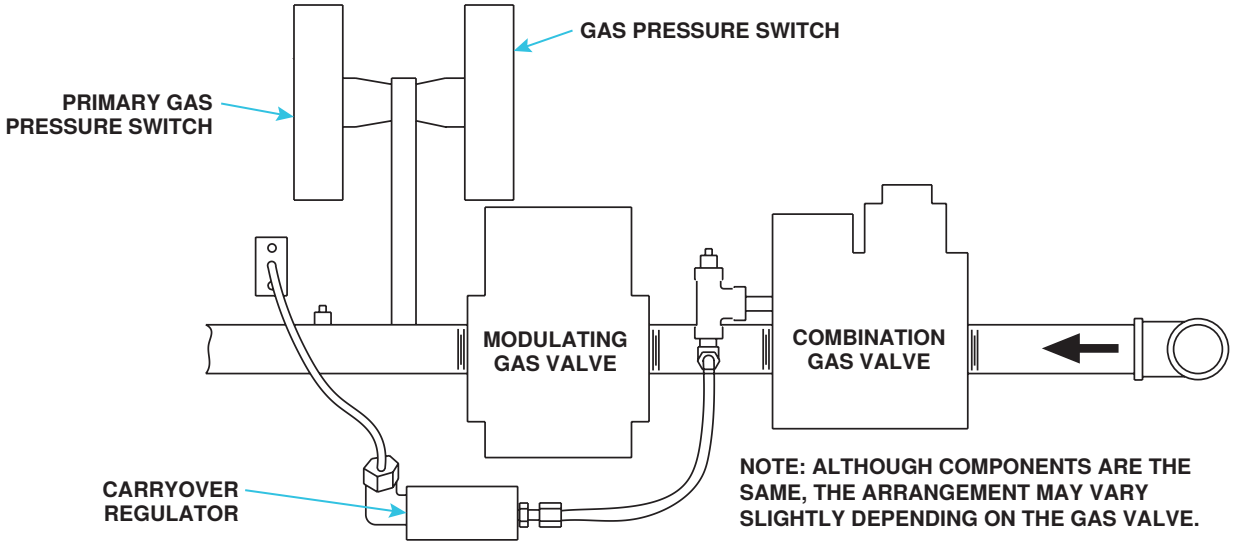

Figure 33. Typical Manifold Arrangement with Electronic Modulation

Table 21. Options AG39 and AG40 Pressure Requirements

Parameter	Unit Size (MBTUh)								
	100	125	150	175	200	225	250	300	400
Maximum turndown (%)	20		27	23	26	23	28	23	25
Input range (MBH)	20–100	25–125	40.3–150	40.3–175	51.8–200	51.8–225	69–250	69–300	100–400
Inlet pressure to modulating gas valve (IN WC)*	3.8	3.9	3.7		3.9		4.0		4.4
Required gas supply pressure (IN WC)	5.0								6.0
*Factory-set.									

- **Electronic modulation between 20–28% and 100% firing rate (option AG40):** With option AG40, the furnace is equipped with a Maxitrol signal conditioner (see **Figure 32**) that receives an input signal of either 4–20 milliamps or 0–10V from a customer-supplied control device such as a computer. With the dip switches on the conditioner positioned to ON, the conditioner accepts a 4–20 milliamp signal. With the dip switches on the conditioner positioned to OFF, the conditioner accepts a 0–10V signal. The conditioner converts the signal to the 0–20V DC current required to control the modulating valve. The heater functions and is equipped in the same way as option AG39 except that with computer control, the temperatures are selected through the software and there is no temperature selector or duct sensor. This uniquely-designed modulation system requires combustion air pressure settings different from the standard system. Refer to **Table 19** for the approximate combustion air proving switch settings at sea-level operation. Refer to **Table 21** for pressure requirements. Refer to the **Troubleshooting Bypass Combustion Air Damper Safety Circuit on Units with Option AG39 or AG40** section for troubleshooting.

Photoelectric Air Duct Smoke Detector (Option SA1)

The smoke detector (see **Figure 34**) is designed to sense the presence of smoke in the air duct system so that appropriate action can be taken to shut off fans and blowers to facilitate the management of toxic smoke and fire gases throughout the areas served by the duct system. The smoke detector is field-installed in accordance with the manufacturer's instructions provided with the detector.

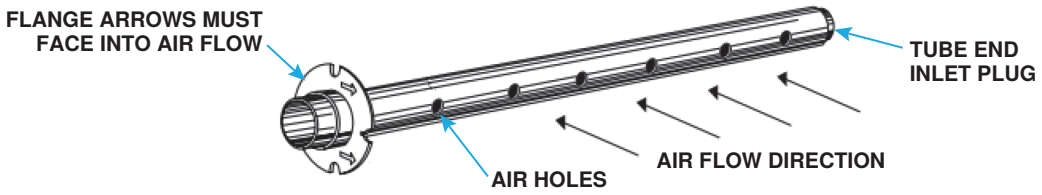

Figure 34. Air Duct Smoke Detector Sampling Tube

⚠ WARNING ⚠

To ensure safety, follow the lighting instructions located on the outlet box cover.

Pre-Startup Checklist

- ❑ Verify suspension/mounting methods and clearances (refer to **Suspension**, **Mounting**, and **Clearances** sections).
- ❑ Verify that bolts removed from shipping clips have been returned to heater cabinet (refer to **Unpacking and Inspection** section).
- ❑ Check duct connections (refer to **Duct Connections** section).
- ❑ Check venting (refer to **Specific Venting Requirements: Piping** section) and ensure that flue discharge and combustion air openings are free of obstructions.
- ❑ Ensure that electrical entrance and gas supply pipe openings are sealed.
- ❑ Ensure that all condensate drains are open (refer to **Condensate Drain Kit (Option CS1) Installation** section).
- ❑ Ensure that electrical supply is in accordance with voltage rating on unit's rating plate.
- ❑ Ensure that all field wiring is in accordance with wiring diagram and that wire gauges are as required for electrical load.
- ❑ Ensure that fuses or circuit breakers are in place and are sized correctly**.**
- ❑ Check piping for leaks and proper gas line pressure and bleed trapped air from gas lines (refer to **Supply Piping Connections** section).
  a. Turn OFF manual shutoff valve.
  b. Turn ON gas supply.
  c. Observe gas meter for movement or attach pressure gauge readable to 0.1 IN WC and, after turning gas ON for 10 seconds, turn OFF gas supply—no change in pressure should occur over 3-minute period.
  d. If step c indicates leak, locate leak by brushing soapy solution on all fittings—bubbles will appear at any leaks.
  e. Repair any leaks and repeat test.

Startup

1. Close all panels tightly.
2. Turn ON electric and gas supply to furnace.
3. Adjust thermostat or ductstat so that call for heat exists.
4. Observe for complete sequencing of safety pilot and ignition (refer to **Table 22**).

NOTE: On units equipped with a controller that includes lockout control, if the pilot is not established within 120 seconds (approximately), the unit locks out for 1 hour or must be reset by interrupting the power to the control circuit (refer to lighting instructions on unit).

Startup—Continued

Table 22. Sequence of Operation

Step	Action	Observe
1	Set thermostat at its lowest setting	
2	Turn ON electric and gas supply to furnace	
3	Turn ON manual gas valves	
4	Set thermostat at desired setting—thermostat calls for heat	Venter motor is energized after 15-second (approximate) time delay
		Venter flow switches from NC to NO contacts to energize pilot gas valve and spark gap to produce pilot flame on each operating cycle
		Sensing probe proves presence of pilot flame and energizes safety switch portion of control to deenergize spark gap and energize main valve
		Main gas ignites and unit fires at full rate
	If flame is extinguished during main burner operation, safety switch closes main valve and recycles spark gap	Thermostat is satisfied
		Solenoid gas valve is deenergized
		Pilot gas valve is deenergized
		Ignition controller isdeenergized
		Time delay relay keeps venter motor on for approximately 1 minute (post-purge)
5	To shut down, set thermostat to lowest setting	

Post-Startup Checklist

- ❑ Observe burner flame at full fire. Natural gas flame should be about 1-1/2 inches in height with blue coloring. Propane gas flame should be approximately same height with blue coloring. Yellow tipping may appear on propane gas. If yellow extends beyond 1/2- to 3/4-inch, adjust air shutters (refer to **Burner Air Shutter Adjustment** section). If shutter adjustment does not reduce yellowing, check for gas leaks at control manifold or orifice fitting.
- ❑ Turn unit OFF and ON, pausing 2 minutes between each cycle. Observe to verify smooth ignition. On two-stage or modulating burner systems, manipulate temperature adjustment slowly up and down to see if control is sequencing or modulating properly. Raising temperature setting drives burner on or to full fire.
- ❑ Using manometer or slant gauge readable up to 14 IN WC, check orifice manifold for operating pressure on full fire. Natural gas should be 3.5 IN WC at this point. Propane gas should be 10 IN WC at this point. Variations from these pressures are not recommended as ignition and efficiency performance can be adversely affected by improper pressure adjustment (refer to **Measure and Adjust Manifold (Outlet) Gas Pressure** section).
- ❑ Place owner's envelope containing Limited Warranty Card, this manual, and any optional information in accessible location near heater. Follow instructions on envelope.

⚠ DANGER ⚠

- **The gas burner in this gas-fired equipment is designed and equipped to provide safe, controlled, complete combustion. However, if the installation does not permit the burner to receive the proper supply of combustion air, complete combustion may not occur. The result is incomplete combustion, which produces carbon monoxide, a poisonous gas that can cause death.**
- **Safe operation of separated-combustion, indirect-fired gas burning equipment requires a sealed, properly-operating vent system that vents all flue products to the outside atmosphere. FAILURE TO PROVIDE PROPER VENTING WILL RESULT IN A HEALTH HAZARD THAT COULD CAUSE SERIOUS PERSONAL INJURY OR DEATH.**
- **Install either the horizontal (see Figure 26) or vertical (see Figure 20) combustion air/vent system using the concentric adapter provided. Always comply with the combustion air requirements in the installation codes and instructions.**
- **Combustion air at the burner should be regulated only by manufacturer-provided equipment. NEVER RESTRICT OR OTHERWISE ALTER THE SUPPLY OF COMBUSTION AIR TO ANY HEATER. CHECK THE COMBUSTION AIR/VENT SYSTEM FOR SOUNDNESS AND FUNCTION AND MAINTAIN IT IN PROPER OPERATING CONDITION.**

ADJUSTMENTS

Measure and Adjust Manifold (Outlet) Gas Pressure

NOTE: Always check the rating plate for minimum gas supply pressure.

Measuring manifold gas pressure cannot be done until the heater is in operation. Minimum supply pressure requirements vary based on the size of the burner and the gas control option. Most units require a minimum of 5 IN WC natural gas as stated above, but sizes 350 and 400 with electronic modulation require a minimum of 6 IN WC natural gas supply pressure.

- **For natural gas:** When the heater leaves the factory, the combination valve is set so that the outlet gas pressure of a single-stage valve or high fire of a two-stage valve is regulated to 3.5 IN WC. Low fire on a two-stage valve is set to 1.8 IN WC. Inlet supply pressure to the valve must be a minimum of 5 IN WC or as noted on the rating plate and a maximum of 14 IN WC.
- **For propane gas:** When the heater leaves the factory, the combination valve is set so that the outlet gas pressure of a single-stage valve or high fire of a two-stage valve is 10 IN WC. Low fire on a two-stage valve is set to 5 IN WC. Inlet pressure to the valve must be a minimum of 11 IN WC and a maximum of 14 IN WC.

⚠ WARNING ⚠

- **Manifold gas pressure must never exceed 3.5 IN WC for natural gas or 10 IN WC for propane gas.**
- **Before attempting to measure or adjust manifold gas pressure, the inlet (supply) pressure must be within the specified range for the gas being used, both when the heater is in operation and when it is on standby. Incorrect inlet pressure could cause excessive manifold gas pressure immediately or at some future time.**

NOTE: A manometer (fluid-filled gauge) with an inches water column scale is recommended.

1. With manual valve (on combination valve) positioned to prevent flow to main burners, connect manometer to outlet pressure tap (see **Figure 35**) on valve.

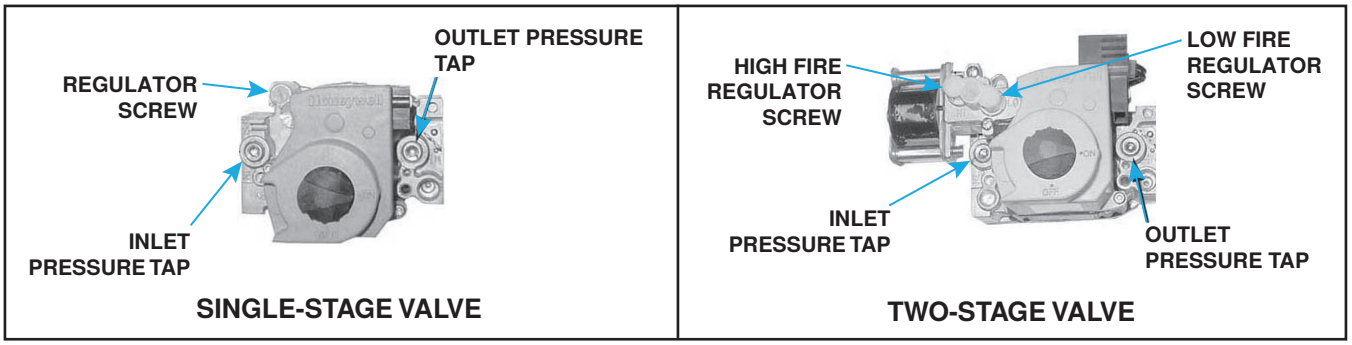

Figure 35. Combination Gas Valves

2. To measure low stage pressure on units equipped with two-stage valve, disconnect wire from HI terminal on valve. Open valve and operate heater and observe manometer reading. Be sure to reconnect wire.

Measure and Adjust Manifold (Outlet) Gas Pressure—Continued

⚠ CAUTION ⚠

DO NOT bottom out the gas valve regulator screw. This can result in excessive overfire and heat exchanger failure due to unregulated manifold pressure.

3. Normally, adjustments to factory-preset regulator should not be necessary. If adjustment is necessary, set pressure to correct settings by turning regulator screw (see **Figure 35**) IN (clockwise) to increase pressure or OUT (counterclockwise) to decrease pressure. Consult valve manufacturer's literature provided with furnace for more detailed information.
4. When manometer reading indicates that outlet pressure is correct, disconnect manometer and install cap(s) on regulator screw(s).

High-Elevation Conversion

NOTES:

- **High-elevation (>2,000 feet (>609 meters)) application with this unit depends on the installation elevation and the heating value of the gas. At high elevations, the heating value of natural gas is always lower than the heating value at sea level.**
- **Deration is necessary to compensate for low atmospheric pressure at high elevations. Generally this will require obtaining the gas heating value from the local gas utility and replacing the burner orifices.**

For high-elevation (>2,000 feet (609 meters)) installations that require orifice replacement, replace the burner orifices as follows:

1. Determine model number and rated input (BTUh) from unit's rating plate.
2. Determine appropriate orifice replacement (refer to **Table 23**) for installation elevation.
3. Unthread existing burner orifices from gas manifold.

⚠ DANGER ⚠

- **DO NOT use pipe tape or sealant (pipe dope or joint compound) on orifice threads because the hole in the orifice may become blocked and may cause fire, explosion, property damage, carbon monoxide poisoning, personal injury, or death.**
- **DO NOT attempt to drill out orifices in the field. Use only factory-supplied orifices. Improperly drilled orifices may cause fire, explosion, carbon monoxide poisoning, personal injury, or death.**

4. Thread replacement burner orifices into gas manifold—to prevent cross-threading, hand-tighten orifices into gas manifold until snug and then tighten one-and-one-half to two turns using wrench.

⚠ DANGER ⚠

DO NOT use an open flame to check for gas leaks.

5. Check all connections for gas leaks using commercial leak-detecting fluid or rich soap and water solution. Leaks are indicated by presence of bubbles. If leak is detected, tighten connection. If leak cannot be stopped by tightening connection, replace part(s).

Table 23. Burner Orifices

Installation Location	Installation Elevation (Feet (Meters))	Gas Type	Unit Size (MBTUh)									
			100	125	150	175	200	225	250	300	350	400
			PN, Drill Size (Quantity)									
US, Canada	0–2001 (0–610)	NG	11792, #41 (4)	84437, #42 (5)	11833, #44 (7)	84437, #42 (7)	11828, #43 (9)	84437, #42 (9)	11833, #44 (12)	84437, #42 (12)	84437, #42 (14)	84437, #42 (16)
		LP	61652, 1.45 mm (4)	61652, 1.45 mm (5)	11830, #55 (7)	61652, 1.45 mm (7)	11830, #55 (9)	61652, 1.45 mm (9)	11830, #55 (12)	61652, 1.45 mm (12)	61652, 1.45 mm (14)	61652, 1.45 mm (16)
US	2001–3000 (611–915)	NG	84437, #42 (4)	84437, #42 (5)	38678, #45 (7)	84437, #42 (7)	11833, #44 (9)	84437, #42 (9)	38678, #45 (12)	84437, #42 (12)	84437, #42 (14)	84437, #42 (16)
		LP	11834, #54 (4)	11834, #54 (5)	11830, #55 (7)	11834, #54 (7)	11830, #55 (9)	11834, #54 (9)	11830, #55 (12)	11834, #54 (12)	11834, #54 (14)	11834, #54 (16)
Canada	2001–4500 (611–1373)	NG	84437, #42 (4)	11828, #43 (5)	38678, #45 (7)	11828, #43 (7)	11833, #44 (9)	11828, #43 (9)	38678, #45 (12)	11828, #43 (12)	11828, #43 (14)	11828, #43 (16)
		LP	11834, #54 (4)	11834, #54 (5)	11830, #55 (7)	11834, #54 (7)	11830, #55 (9)	11834, #54 (9)	11830, #55 (12)	11834, #54 (12)	11834, #54 (14)	11834, #54 (16)
US	3001–4000 (916–1220)	NG	84437, #42 (4)	11828, #43 (5)	38678, #45 (7)	11828, #43 (7)	11833, #44 (9)	11828, #43 (9)	38678, #45 (12)	11828, #43 (12)	11828, #43 (14)	11828, #43 (16)
		LP	11834, #54 (4)	11834, #54 (5)	11830, #55 (7)	11834, #54 (7)	11830, #55 (9)	11834, #54 (9)	11830, #55 (12)	11834, #54 (12)	11834, #54 (14)	11834, #54 (16)
	4001–5000 (1221–1525)	NG	84437, #42 (4)	11828, #43 (5)	38678, #45 (7)	11828, #43 (7)	11833, #44 (9)	11828, #43 (9)	38678, #45 (12)	11828, #43 (12)	11828, #43 (14)	11828, #43 (16)
		LP	11834, #54 (4)	11834, #54 (5)	11830, #55 (7)	11834, #54 (7)	11830, #55 (9)	11834, #54 (9)	11830, #55 (12)	11834, #54 (12)	11834, #54 (14)	11834, #54 (16)
US	5001–6000 (1526–1830)	NG	11828, #43 (4)	11828, #43 (5)	16590, #46 (7)	11828, #43 (7)	38678, #45 (9)	11828, #43 (9)	16590, #46 (12)	11828, #43 (12)	11828, #43 (14)	11828, #43 (16)
		LP	97360, 1.35 mm (4)	97360, 1.35 mm (5)	39658, #56 (7)	97360, 1.35 mm (7)	39658, #56 (9)	97360, 1.35 mm (9)	39658, #56 (12)	97360, 1.35 mm (12)	97360, 1.35 mm (14)	97360, 1.35 mm (16)
	6001–7000 (1831–2135)	NG	11828, #43 (4)	11833, #44 (5)	84853, #47 (7)	11833, #44 (7)	38678, #45 (9)	11833, #44 (9)	84853, #47 (12)	11833, #44 (12)	11833, #44 (14)	11833, #44 (16)
		LP	97360, 1.35 mm (4)	97360, 1.35 mm (5)	39658, #56 (7)	97360, 1.35 mm (7)	39658, #56 (9)	97360, 1.35 mm (9)	39658, #56 (12)	97360, 1.35 mm (12)	97360, 1.35 mm (14)	97360, 1.35 mm (16)
	7001–8000 (2136–2440)	NG	11833, #44 (4)	11833, #44 (5)	84853, #47 (7)	11833, #44 (7)	16590, #46 (9)	11833, #44 (9)	84853, #47 (12)	11833, #44 (12)	11833, #44 (14)	11833, #44 (16)
		LP	11830, #55 (4)	11830, #55 (5)	39658, #56 (7)	11830, #55 (7)	39658, #56 (9)	11830, #55 (9)	39658, #56 (12)	11830, #55 (12)	11830, #55 (14)	11830, #55 (16)
	8001–9000 (2441–2745)	NG	11833, #44 (4)	38678, #45 (5)	40414, #48 (7)	38678, #45 (7)	84853, #47 (9)	38678, #45 (9)	40414, #48 (12)	38678, #45 (12)	38678, #45 (14)	38678, #45 (16)
		LP	11830, #55 (4)	11830, #55 (5)	39658, #56 (7)	11830, #55 (7)	39658, #56 (9)	11830, #55 (9)	39658, #56 (12)	11830, #55 (12)	11830, #55 (14)	11830, #55 (16)
	9001–10,000 (2746–3048)	NG	38678, #45 (4)	16590, #46 (5)	40414, #48 (7)	16590, #46 (7)	84853, #47 (9)	16590, #46 (9)	40414, #48 (12)	16590, #46 (12)	16590, #46 (14)	16590, #46 (16)
		LP	11830, #55 (4)	11830, #55 (5)	39658, #56 (7)	11830, #55 (7)	39658, #56 (9)	11830, #55 (9)	39658, #56 (12)	11830, #55 (12)	11830, #55 (14)	11830, #55 (16)

Measure and Adjust Manifold (Outlet) Gas Pressure—Continued

Gas Conversion

⚠ DANGER ⚠

Gas conversion must be performed by qualified service personnel using a factory-supplied conversion kit. Failure to use the proper conversion kit can cause fire, explosion, property damage, carbon monoxide poisoning, personal injury, or death.

If gas conversion (natural gas to propane or propane to natural gas) is required, convert the unit in accordance with the gas conversion manual found at **www.reznorhvac.com**. When conversion is complete, verify that the input rate is correct.

Burner Air Shutter Adjustment

⚠ DANGER ⚠

Failure to adjust air shutters according to directions could cause property damage, personal injury, and/or death.

NOTE: Air shutters are required on propane gas units but are optional on natural gas units.

1. Operate heater for about 15 minutes with air shutters open.

NOTE: When making the adjustment, close the air shutters no more than is necessary to eliminate the problem condition.

2. Turn slotted screw that moves air shutters and adjusts all burners simultaneously on end manifold bracket—clockwise to open shutters or counterclockwise to close shutters. Close air shutters and observe flame for yellow-tipping.

NOTE: A limited amount of yellow-tipping is permissible for liquefied petroleum gases. Natural gas should not display any yellow-tipping.

3. Open air shutters until yellow disappears.

MAINTENANCE

⚠ WARNING ⚠

If you turn OFF the power supply, turn OFF the gas.

NOTE: Use only factory-authorized replacement parts.

This unit will operate with a minimum of maintenance. To ensure long life and satisfactory performance, a furnace that is operating under normal conditions should be inspected every 4 months. If the furnace is operating in an area where an unusual amount of dust, soot, or other impurities are present in the air, more frequent inspection is recommended.

Service Checklist

The following section is designed to aid a qualified service person in maintaining and servicing this equipment. At a minimum, perform the following annually:

- ❑ Check gas valve to ensure that gas flow is being shut off completely.
- ❑ Clean heat exchanger both internally and externally.
- ❑ Check pilot burner and main burners for scale, dust, or lint accumulation and clean as needed.
- ❑ Check vent/combustion air system, inspect all joints, and replace any parts that do not appear sound.
- ❑ Check main burner ports, carryover assemblies, and orifices for cleanliness.
- ❑ Check wiring for any damaged wire—replace damaged wiring (refer to **Electrical Connections** section for wiring requirements).

Combination Gas Valve Maintenance

⚠ WARNING ⚠

The combination gas valve is the prime safety shutoff. All gas supply lines must be free of dirt or scale before connecting them to the unit to ensure positive closure.

Inspect the combination gas valve, carefully remove any external dirt accumulation, and check wiring connections. Check the valve annually to ensure that the valve is shutting off gas flow completely as follows:

1. Close manual shutoff valve to prevent flow to combination gas valve.

NOTE: Use a water column manometer that is readable to the nearest tenth of an inch.

2. Connect manometer to inlet pressure tap on combination gas valve (see **Figure 35**).
3. Observe manometer for 2 to 3 minutes—no gas pressure should be indicated.
   a. If manometer indicates any gas pressure, manual shutoff valve must be replaced or repaired before combination gas valve can be checked.
   b. If manometer does not indicate gas pressure, slowly open manual shutoff valve.
4. Close manual shutoff valve and observe manometer— no loss of gas pressure should be indicated. If loss of pressure is indicated, replace combination gas valve before furnace is restored to operation.

Vent/Combustion Air System Maintenance

Check vent/combustion air system at least once a year. Inspect all joints, seams, and terminal caps. Clean grills and screens. Replace any defective parts.

Maintenance Procedures

Burner Rack Maintenance

Remove, disassemble, clean, reassemble, and re-install burner rack as follows:

1. Remove burner rack:
   a. Turn OFF gas and electric supply.
   b. Remove control access side panel.
   c. Disconnect any pilot lines and flame sensor leads.
   d. Mark and disconnect electric valve leads.
   e. Uncouple union in gas supply.
   f. Remove sheet metal screws in top corners of burner rack assembly.
   g. Pull drawer-type burner rack out of furnace.

Maintenance Procedures—Continued

Burner Rack Maintenance—Continued

2. Disassemble burner rack:

NOTE: Natural gas burner racks manufactured *before* Series 6 may have a lighter tube carryover system. Break the lighter tube connection at the orifice and remove the supply tubing, the drip shield, and the lighter tube.

a. For natural gas burner rack, remove flash carryover system from manifold end of burner rack.
b. For propane gas burner rack:
   (1) Break lighter tube connection at regulator and remove lighter tube orifice supply tubing.
   (2) Remove retaining screws in drip shield and remove shield.
   (3) Remove retaining screws and slide out lighter tube.
c. Pull main burners horizontally away from injection opening and lift out.
d. Remove manifold bracket screws and remove manifold.
e. Remove burner orifices.
f. Remove screws and lift out pilot burner.

3. Clean burner rack in accordance with instructions in **Cleaning Pilot and Burners** section.
4. Re-assemble and re-install burner rack by reversing above steps, being careful not to create any unsafe conditions.

Cleaning Pilot and Burners

⚠ WARNING ⚠

To prevent injury when cleaning pilot and burners, wearing eye protection is recommended.

⚠ CAUTION ⚠

To prevent damage to pilot orifice, do not ream the orifice.

If the pilot flame appears short and/or yellow, check the pilot orifice for blockage caused by lint or dust accumulation:

1. Remove the pilot orifice and clean it using compressed air.
2. Check and clean the aeration slot in the pilot burner.
3. Clean the metal sensing probe and the pilot hood with an emery cloth and wipe off the ceramic insulator.
4. Check the spark gap (see **Figure 36**), which should be maintained to 0.100 inch (2.5 mm).

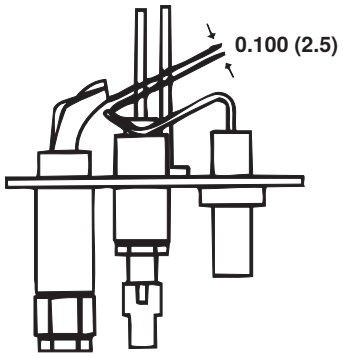

Figure 36. Pilot Assembly Spark Gap

5. After the pilot is cleaned, blow away any dirt using compressed air.
6. Clean the main burners and burner orifices using compressed air.

⚠ CAUTION ⚠

When cleaning burner ports, do not use anything that might change the port size.

7. Use an air nozzle to blow out scale and dust accumulation from the burner ports. Alternate blowing compressed air through the burner ports and then through the venturi. Use a fine wire to dislodge any stubborn particles from the burner ports.
8. Clean the burner rack carryover systems using compressed air.

Venter Motor Maintenance

Power venter motors are permanently lubricated. No oiling is required.

Spark Ignition System Maintenance

⚠ WARNING ⚠

Due to high voltage on pilot spark wire and pilot electrode, do not touch when energized.

NOTE: When checking for spark with the pilot burner assembly removed from the burner rack, the pilot assembly must be grounded to the heater for proper spark.

1. If no spark occurs, check the following:
   a. Using microampmeter, measure voltage between terminals TH and 7 on ignition controller. Voltage should be at least 20V and no higher than 32V. Refer to **General Troubleshooting** section if no voltage is observed.
   b. Check for short to ground in high tension lead and/or ceramic insulator.
   c. Verify that pilot spark gap (see **Figure 36**) is approximately 0.100 inch (2.5 mm).
   d. If the above conditions are normal and no spark occurs, replace the ignition controller.

NOTE: If replacing an obsolete ignition controller (see Figure 37), order a replacement kit: PN 257472 for a unit with option AH2 (UTEC MODEL 1003-638A, PN 257009) or PN 257473 for a unit with option AH3 (UTEC MODEL 1003-514, PN 257010). Option codes are listed on the unit wiring diagram.

Maintenance Procedures—Continued

Spark Ignition System Maintenance—Continued

OPTION AH2

PN 257009

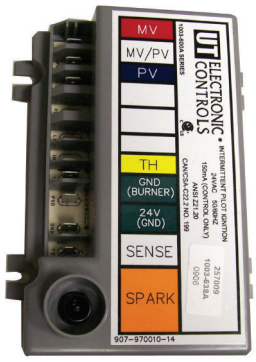

OPTION AH3

PN 257010



Figure 37. Obsolete Ignition Controllers

2. If the main gas valve fails to open with a normal full-size pilot flame established, check the following:
   a. If voltage between black and brown leads on main gas valve is 20–32 VAC and there is no main gas flow with built-in manual valve in FULL OPEN position, main valve is defective.
   b. If there is no voltage between black and brown leads on main gas valve, check for disconnected or shorted flame sensor lead or flame sensor probe.
3. If the above conditions are normal and main gas flow is still off, the ignition controller is probably defective. Do not attempt to service the ignition controller as it does not contain any replaceable components.

Cleaning Heat Exchanger

1. Clean outer surfaces (circulating air side):
   a. Remove inspection panels in ductwork or remove ductwork.
   b. Remove baffles between heat exchanger tubes. If heater has been converted for high CFM (look for conversion label), these baffles will have already been removed.
      (1) Remove A screws (see **Figure 2**).
      (2) Slide each baffle forward.
   c. Use brush and/or air hose to remove accumulated dust and grease deposits from heat exchanger tubes and baffles.
   d. Re-install baffles:
      (1) Slide baffles into slot in other end of heat exchanger.
      (2) Replace A screws (see **Figure 2**).
   e. Secure ductwork as necessary.
2. Clean inner surfaces (combustion gas side):
   a. Remove burner rack assembly in accordance with **Burner Rack Maintenance** section to allow access to inside of heat exchanger tubes.
   b. Use mirror and flashlight to examine narrow section of each tube.
   c. Use 1/2-inch diameter furnace brush to scrub tube walls.
   d. Use brush and/or air hose (18-to 24-inch) to remove any accumulated dust, rust, and/or soot.
   e. Re-assemble furnace and check for proper operation.

TROUBLESHOOTING

General Troubleshooting

Table 24. General Troubleshooting

Symptom	Probable Cause	Remedy
A. Venter motor will not start	1. No power to furnace	Turn ON power and check supply fuses or circuit breaker
	2. No 24V power to venter relay	Turn up thermostat and check control transformer output
		Check for loose or improper wire connections
	3. Defective venter relay	Replace defective part
	4. Defective motor or capacitor	Replace defective part
B. Pilot will not light with venter operating	1. Manual valve not open	Open manual valve
	2. Air in gas line	Bleed gas line
	3. Dirt in pilot orifice	Remove pilot orifice and clean with compressed air or solvent
	4. Gas pressure too high or too low	Adjust gas pressure (refer to **Measure and Adjust Manifold (Outlet) Gas Pressure** section)
	5. Kinked pilot tubing	Replace tubing
	6. Pilot valve does not open	If 24V power is available at valve, replace valve
	7. No spark	
	a. Loose wire connections	Ensure that all wires connections are solid
	b. Transformer failure	Ensure that 24V power is available
	c. Incorrect spark gap	Maintain spark gap at 0.100 inch
	d. Spark cable shorted to ground	Replace worn or grounded spark cable
	e. Spark electrode shorted to ground	Replace pilot if ceramic spark electrode is cracked or grounded
	f. Drafts affecting pilot	Ensure that all panels are in place and are tightly secured to prevent drafts at pilot
	g. Ignition control not grounded	Ensure that ignition control is grounded to furnace chassis
	h. Faulty ignition controller	If 24V power is available to ignition controller and all other causes have been eliminated, replace ignition control
B. Pilot will not light with venter operating	8. Optional lockout device interrupting control circuit due to above causes	Reset lockout by interrupting control at thermostat
	9. Faulty combustion air proving switch	Replace combustion air proving switch
C. Pilot lights but main valve will not open	1. Manual valve not open	Open manual valve
	2. Main valve not operating	
	a. Defective valve	If 24V power is available at valve connections and valve remains closed, replace valve
	b. Loose wire connections	Check and tighten all wiring connections
	3. Ignition control does not power main valve	
	a. Loose wire connections	Check and tighten all wiring connections
	b. Flame sensor grounded, pilot lights, and spark continues	Ensure that flame sensor lead is not grounded and that insulation or ceramic is not cracked; replace as required
	c. Incorrect gas pressure	Adjust gas pressure (refer to **Measure and Adjust Manifold (Outlet) Gas Pressure** section)
	d. Cracked ceramic at sensor	Replace sensor
	e. Faulty ignition controller	If all checks listed in **Spark Ignition System Maintenance** section indicate no other cause, replace ignition controller (do not attempt to repair ignition controller, which has no field-replaceable parts)

General Troubleshooting—Continued

Table 24. General Troubleshooting—Continued

Symptom	Probable Cause	Remedy
D. Insufficient heat with heater operating	1. Dirty filters in field-supplied blower system	Clean or replace filters
	2. Incorrect manifold pressure	Check manifold pressure (refer to **Measure and Adjust Manifold (Outlet) Gas Pressure** section)
	3. Limit control cycling on	Check air throughput
	4. Improper thermostat location or adjustment	Refer to thermostat manufacturer's instructions
	5. Belt slipping on field-supplied blower	Adjust belt tension in accordance with manufacturer's instructions
	6. Fan control improperly wired	Ensure that wiring connections are in accordance with wiring diagram
	7. Defective fan control	Replace fan control
	8. Field-supplied blower set for too low temperature rise	Decrease blower speed or increase static pressure

Troubleshooting Bypass Combustion Air Damper Safety Circuit on Units with Option AG39 or AG40

NOTE: For each of the following steps, check to ensure that the wiring is not defective and that wiring connections are secure.

1. Main burners are inoperative—24V is available between terminals 2 and 7 (see step 1, **Figure 38**).
2. Steady call for heat (burner cycles)—24V is available between terminals 11 and 7 and terminals 2 and 7 (see step 1, **Figure 38**).

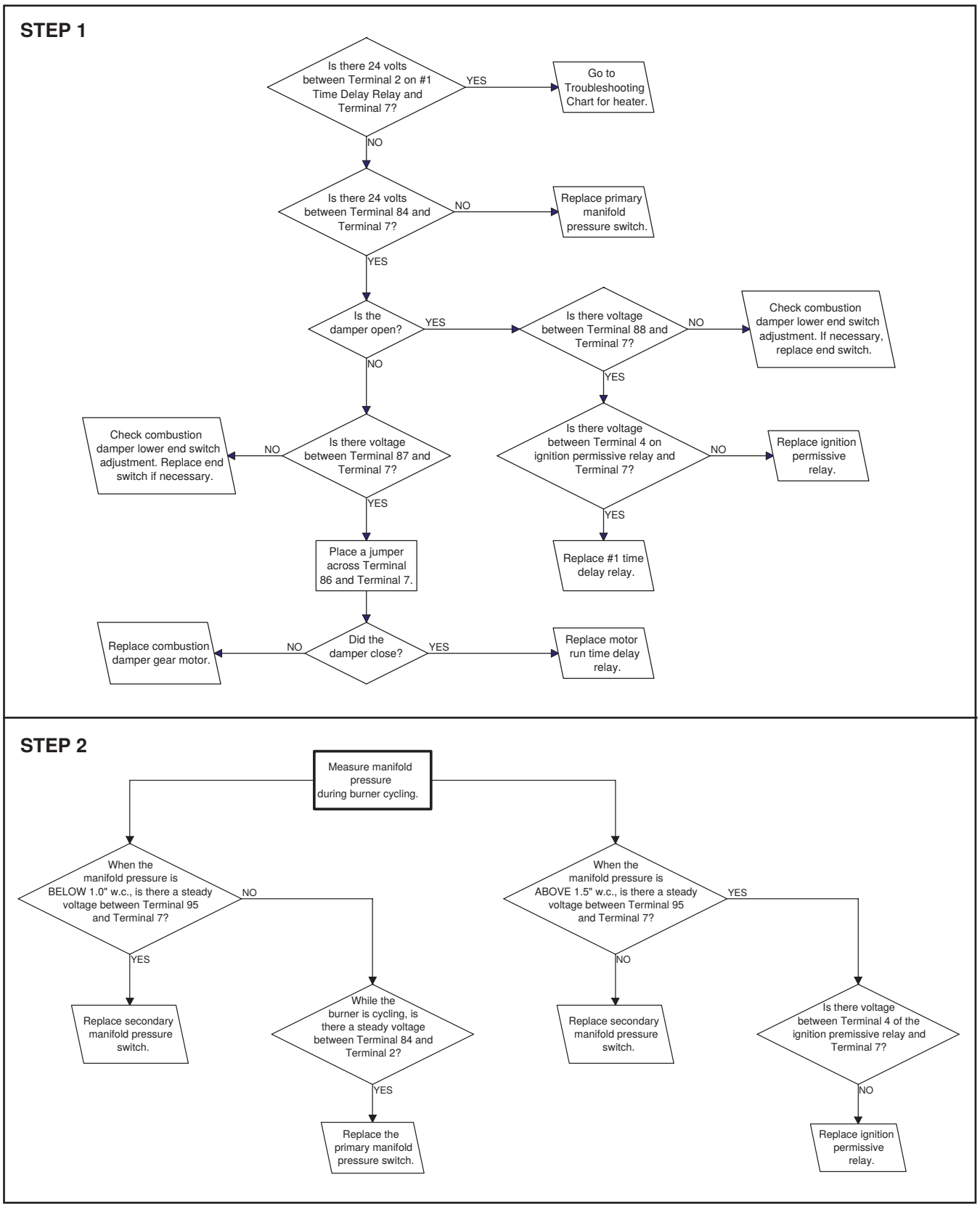

Figure 38. Troubleshooting Guide for Checking Bypass Combustion Air Damper Safety Circuit on Units with Option AG39 or AG40

INSTALLATION RECORD (TO BE COMPLETED BY INSTALLER)

Model	Serial No.	Date of Installation	Notes
	Installer	Distributor	
Name			
Company			
Address			
Phone No.			

For more information on Reznor HVAC products:

- **Contact your local Reznor representative at 1-800-695-1901**
- **Refer to the manuals and additional consumer materials found at www.reznorhvac.com**

Specifications and illustrations subject to change without notice or incurring obligations.
Latest version of this manual is available at **www.reznorhvac.com**.
©2026 Reznor LLC, Saint Charles, MO. All rights reserved.
SC-IOM (10-26) 207696-M