REZNOR®

GAS DUCT FURNACE CATALOG

COMMERCIAL/INDUSTRIAL

FUEL	INSTALLATION	CAPACITIES
Natural Gas	Indoor	75 - 800 MBH Heating
Propane	Outdoor	610 - 14,815 CFM Air



TIME TESTED. CONTRACTOR APPROVED.

REZNOR® IS YOUR GLOBAL LEADER IN HVAC TECHNOLOGY

BACKGROUND

Reznor was founded in 1888 to manufacture the “Reznor” reflector heater, which used a luminous flame gas burner developed by George Reznor. This technological breakthrough was an immediate success and hastened the expansion of gas heating in residential and commercial applications. Technological development and innovation have been the hallmarks of Reznor products through the years. As a result of this pioneering role in the heating, makeup air and ventilating equipment field, the products offered today are the most advanced in engineering design to satisfy a wide variety of applications.

SERVICES

Product service requirements are handled through contractors and/or distributors, with backup from local representatives and factory-based service team. Replacement parts inventories for both warranty and non-warranty requirements are maintained at service centers throughout the country and at the manufacturing facilities.

For the Reznor Representative in your area, call 800-695-1901.

ABOUT NORTEK GLOBAL HVAC

For more than 100 years, Nortek Global HVAC has brought the latest innovations in heating, cooling and ventilation to homes, businesses and every place in between. Our vast portfolio of residential and light commercial brands offers efficient and dependable products that live up to their trusted reputation. We’re always looking for the next advancement in HVAC because innovation is not only our legacy, it is our future.

In addition to Reznor product, Nortek Global HVAC and its subsidiaries build and sell HVAC systems under the Maytag®, Frigidaire®, Mammoth® and Gibson® brands, among others.

IMPORTANT: This guide is intended to provide specifications and technical information only.

This guide is not intended to be an instruction manual. When installing heating and ventilating equipment, you must check and conform to all local and national building codes. Improper installation of heating equipment could be dangerous. Consult manufacturer’s installation manual for instructions and important warnings.

All specifications subject to change without notice.

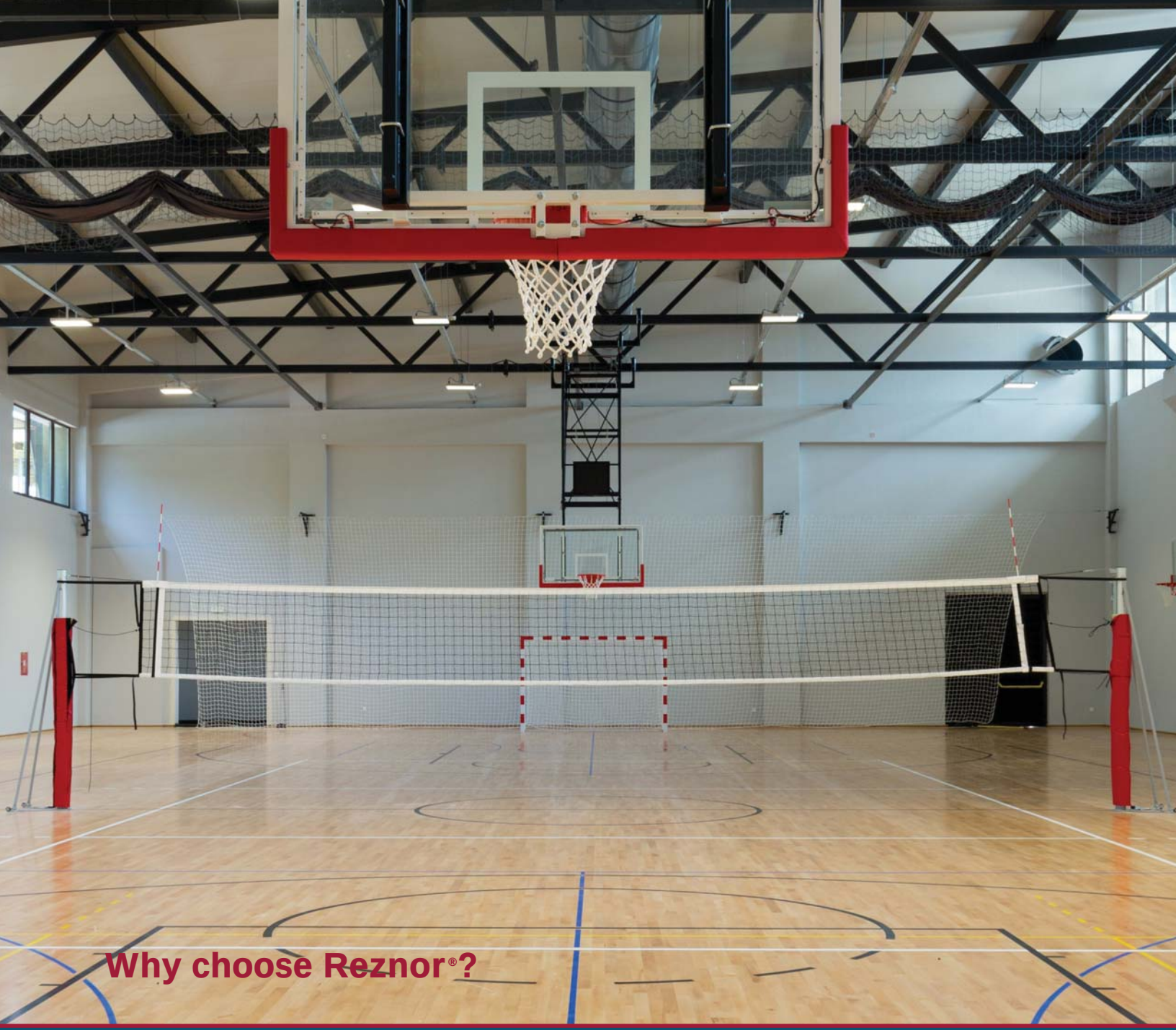

Why choose Reznor®?

With more than 130 years of experience in gas heating and air conditioning, Reznor manufactures a wide range of industrial and commercial HVAC solutions. Founded in 1888 in Pennsylvania, Reznor is a global leader thanks to its innovative and economical solutions for heating, cooling, ventilation and air quality.

Contents

	Page
EEDU Gas-Fired Duct Furnace	4
SC Gas-Fired Duct Furnace - Series 6	7
X Gas-Fired, Gravity-Vented Duct Furnace	10
HRPD Dual Duct Furnace	13
RP Gas-Fired, Power-Vented Duct Furnace	16
Duct Furnace Blower Arrangements	19
Electrical Supply And Connections	20
Power Venting Arrangements	20
Separated Combustion Venting Arrangements	22
Gas Control Systems	25
Fan Control	27
Pilot Ignition Systems	27
Sizing Gas Supply Lines	28
Pressure Drop Tables	29
Installation Requirements	31
Sizing By-Pass Air Duct	34
Sample Specifications	36

EEDU GAS-FIRED DUCT FURNACE

ENERGY EFFICIENT INDOOR, POWER-VENTED, GAS-FIRED DUCT FURNACE FOR COMMERCIAL/INDUSTRIAL USE



Reznor® Venturion® EEDU Series Indoor Duct Furnaces were developed to provide an annual fuel use improvement of up to 25% when compared with gravity-vented duct furnaces. The use of a factory-installed power venter, with metered combustion air, limits burner flue losses while reducing the required vent pipe size. A sealed vent product collection chamber, in lieu of a draft diverter, reduces the loss of dilution air from the room in both the on and off cycles.

The Series EEDU duct furnaces are available for use with either natural or propane gas, as specified, in sizes from 75,000 through 400,000 BTUH gas input. They are designed for use as heating components in heating, heating/cooling, or makeup air systems and require a separate blower system for air delivery. The furnace has a Reznor Thermocore® aluminized steel heat exchanger with venturi-design tubes. The die formed burners are of aluminized steel and include flared ports with stainless steel insert.

The EEDU model is approved for temperature rise of 50° to 90°F and includes “finger-baffles” for proper air distribution at these lower air volumes. Removing the finger-baffles will increase the airflow. These field converted units are approved for a temperature rise of 20° to 70°F.

Included as standard on the EEDU Series are an intermittent spark pilot and a single-stage 24-volt gas valve. Model EEDU Series units are designed for field connection to a 24-volt thermostat for automatic operation. All required limit and safety controls are provided, including a combustion air pressure switch, which verifies proper vent flow prior to allowing operation of the gas valve.

STANDARD FEATURES

- Orifices for natural gas
- Aluminized steel heat exchanger
- Aluminized steel burners with stainless steel insert
- 120-volt supply voltage
- Factory-installed power venter
- 120-volt limit control
- 24-volt control voltage transformer
- Combustion air pressure switch
- Redundant single-stage combination gas valve (see note 1)
- Spark-ignited intermittent safety pilot with electronic flame supervision
- Burner rack access (pullout drawer)
- Hanger/support angle
- Vertical vent cap - (Canada only)

OPTIONAL FEATURES - FACTORY INSTALLED

- Unit equipped for propane gas
- E-3 (409) stainless steel heat exchanger (see note 2)
- E-3 (409) stainless steel burners (see note 2)
- E-3 (409) stainless steel drip pan (see note 2)
- Gas Controls
- Spark-ignited intermittent safety pilot with electronic flame supervision and timed lockout
- Two-stage gas controls (Not available on size 75 for propane gas)
- Electronic modulation - 50%-100% firing rate
- Burner air shutters (required for propane gas)
- 208/230-volt 1-phase voltage alternate
- Heat exchanger side panels

NOTES:

1. Regulated combination redundant gas valve consists of combination pilot solenoid valve, electric gas valve, pilot filter, pressure regulator, pilot shut-off, and manual shut-off, all in one body. Gas supply pressure must not exceed 0.5 PSI (8 oz. - 14” w.c.). Minimum inlet pressure for natural gas is 5” w.c. Minimum inlet pressure for propane gas is 11” w.c.
2. For air inlet temperatures below 40°F or temperature rise less than 40°F, an optional stainless steel heat exchanger is recommended.
3. See temperature rise and pressure drop tables.
4. Blower must be placed on entering side of furnace.
5. Approved for installation downstream of an air conditioning coil (optional drain flange, stainless steel heat exchanger, and stainless steel burners are recommended).
6. Not approved for residential use.

REZNOR®

EEDU GAS-FIRED DUCT FURNACE continued

OPTIONAL FEATURES - FIELD INSTALLED

- Transformer for 277/460V voltage alternate (used with standard 120V unit)
- Multiple coupling kit (one - five furnaces)
- Condensate drain flange kit
- Vent terminal cap
- 1″ pipe hanger kit (includes four free-turning female threaded sockets)
- Manual shut-off valve and union (packaged inside unit)
- Adjustable fan control (bimetal helix type)
- Room override for electronic modulation with ductstat
- Single-stage thermostat (40° to 90°F)
- Two-stage thermostat (40° to 90°F)
- Thermostat guard with locking cover

TECHNICAL DATA

Model EEDU	Size	75	100	125	140	170	200	225	250	300	350	400
Input Heating Capacity	BTUH	75,000	100,000	125,000	140,000	170,000	200,000	225,000	250,000	300,000	350,000	400,000
	kW	22.0	29.3	36.6	41.0	49.8	58.6	65.9	73.3	87.9	102.6	117.2
Output Heating Capacity (80%) A	BTUH	60,000	80,000	100,000	112,000	136,000	160,000	180,000	200,000	240,000	280,000	320,000
	kW	17.6	23.4	29.3	32.8	39.9	46.9	52.8	58.6	70.3	82.1	93.8
Full Load Amps (115V)		2.0										
Unit Control Amps (24V)		0.7										
Air Volume w/Finger-Baffles	cfm	615-1,105	820-1,480	1,025-1,850	1,150-2,065	1,390-2,505	1,635-2,945	1,840-3,315	2,045-3,685	2,455-4,420	2,865-5,160	3,275-5,895
	m3/hr	1,045-1,877	1,393-2,514	1,741-3,143	1,954-3,508	2,362-4,256	2,778-5,003	3,126-5,632	3,474-6,261	4,171-7,509	4,867-8,767	5,564-10,015
Air Volume w/o Finger-Baffles B	cfm	850-2,765	1,135-3,685	1,420-4,605	1,585-5,160	1,790-6,265	2,105-7,370	2,370-8,295	2,630-9,215	3,160-11,060	3,685-12,900	4,210-14,745
	m3/hr	1,444-4,698	1,928-6,261	2,413-7,824	2,693-8,767	3,041-10,644	3,576-12,521	4,027-14,093	4,468-15,656	5,369-18,790	6,261-21,916	7,153-25,051
Net Weight	lbs	104		126	128	150	172	194	216	262	306	328
	kg	47		57	58	68	78	88	98	119	139	149
Ship Weight	lbs	128		142	144	168	192	216	240	292	338	362
	kg	58		64	65	76	87	98	109	132	153	164
Gas Connection (in.) Natural C		1/2								3/4		
Venter Outlet Size D		4”						5”		6”		

A In U.S. ratings are for altitudes to 2,000 feet. Above 2,000 feet derate by orifice change, 4% for each 1,000 feet above sea level. In Canada ratings are for altitudes to 2,000 feet. For high altitude units (2,001-4,500 ft.) derate by 10% of maximum input.

B For high air volume the finger-baffles in the heat exchanger section are removed during unit installation. See installation manual for instructions.

C Sizes shown are for natural gas connections, NOT supply line size. Propane gas connection is 1/2” for all sizes.

D Refer to power venting arrangements and wall or roof penetration details.

EEDU GAS-FIRED DUCT FURNACE continued

DIMENSIONS ±1/8” (3MM)

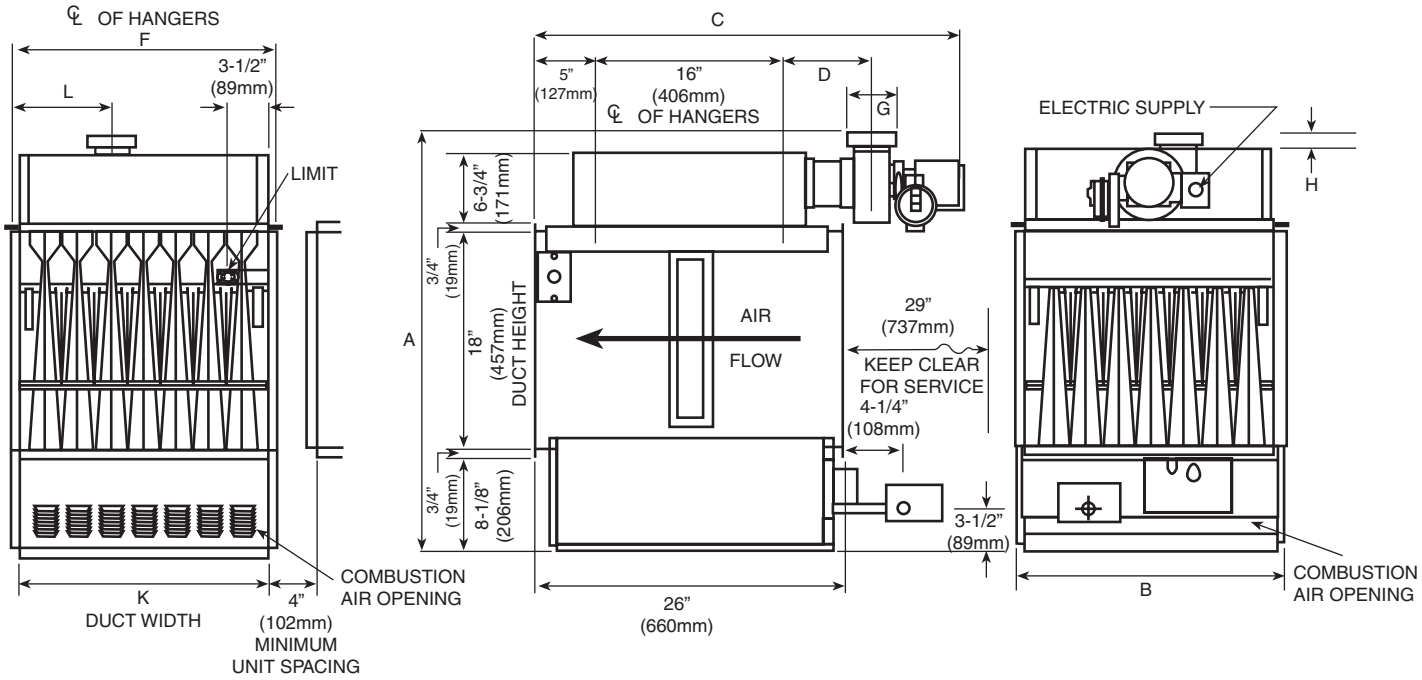

FRONT VIEW **SIDE VIEW** **REAR VIEW**

Size		A	B	C	D	F	G	H	K	L
75	in.	35	14 1/4	35 11/16	7 1/4	14 5/8	4	5/8	12 1/2	4 5/8
	mm	889	362	906	184	371	102	16	318	117
100	in.	35	14 1/4	35 11/16	7 1/4	14 5/8	4	5/8	12 1/2	4 5/8
	mm	889	362	906	184	371	102	16	318	117
125	in.	35	17	35 11/16	7 1/4	17 3/8	4	5/8	15 1/4	6
	mm	889	432	906	184	441	102	16	387	152
140	in.	35	17	35 11/16	7 1/4	17 3/8	4	5/8	15 1/4	6
	mm	889	432	906	184	441	102	16	387	152
170	in.	35	19 3/4	35 11/16	7 1/4	20 1/8	4	5/8	18	7 3/8
	mm	889	502	906	184	511	102	16	457	187
200	in.	35	22 1/2	35 11/16	7 1/4	22 7/8	4	5/8	20 3/4	8 3/4
	mm	889	572	906	184	581	102	16	527	222
225	in.	35 3/4	25 1/4	35 11/16	7 1/4	25 5/8	5	1 3/8	23 1/2	10 1/8
	mm	908	641	906	184	651	127	35	597	257
250	in.	35 3/4	28	35 11/16	7 1/4	28 3/8	5	1 3/8	26 1/4	11 1/2
	mm	908	711	906	184	721	127	35	667	292
300	in.	36	33 1/2	38 1/8	9 9/16	33 7/8	6	1 5/8	31 3/4	13 7/8
	mm	914	851	968	243	860	152	41	806	352
350	in.	36	39	38 1/8	9 9/16	39 3/8	6	1 5/8	37 1/4	16 5/8
	mm	914	991	968	243	1,000	152	41	946	422
400	in.	36	44 1/2	38 1/8	9 9/16	44 7/8	6	1 5/8	42 3/4	19 3/8
	mm	914	1,130	968	243	1,140	152	41	1,086	492

CLEARANCE FROM COMBUSTIBLES

1. Top, flue connections, front - 6” (152mm)
2. Bottom, sides - 12” (305mm)
3. Back, service access requires 29” (737mm)

REZNOR®

SC GAS-FIRED DUCT FURNACE - SERIES 6

INDOOR, SEPARATED COMBUSTION, GAS-FIRED, DUCT FURNACE FOR COMMERCIAL/INDUSTRIAL USE



Model SDH is the a separated-combustion version of the Reznor® Model SC Series Separated Combustion gas-fired duct furnaces are designed to separate their combustion air from the air in the heated space. These units are designed and manufactured in accordance with the ANSI definition of "separated combustion." While discharging exhaust air, the power venter draws in combustion air from the outside atmosphere. Exclusive outside combustion air prevents dirt, lint, dust or other contaminants in the heated space from entering the combustion zone of the furnace. The separated combustion furnace is designed for use in building areas with negative pressure and/or extremely dirty or mildly corrosive atmospheres. A specially designed combustion air inlet/vent terminal assembly available with SC Series units requires only a single-building penetration for both exhaust and combustion air.

Reznor Model SC Series 6 duct furnaces are available in sizes from 100,000 through 400,000 BTUH gas input for use with either natural or propane gas, as specified. These units are designed for duct connection and require a separate air moving device upstream from the furnace. Model SC Series 6 furnaces are 80% thermal efficient.

Standard features include a spark-ignited intermittent safety pilot and a single-stage, 24-volt gas valve. Each unit is equipped with all required limit and safety controls, including a combustion air pressure differential switch to verify proper vent flow before allowing the gas valve to function. Operation of the heater is controlled through field connection to a remote 24-volt thermostat.

Model SC is approved for a temperature rise range of 30°F to 90°F and include "finger-baffles" for proper air distribution at these lower air volumes. Removing these finger-baffles increases the airflow. These field converted units are approved for a temperature rise of 20°F to 75°F.

Model SC furnaces are approved for installation downstream of an air conditioning coil. (When used in this application, installing an optional condensate drain on the furnace is strongly recommended. Also recommended, is the selection of optional stainless steel burners and heat exchanger.)

STANDARD FEATURES

- Orifices for natural gas
- Aluminized steel heat exchanger
- Aluminized burners with a stainless steel insert
- 115 volt supply voltage
- 115 volt venter motor with stainless steel shaft
- 24 volt control voltage transformer
- Redundant single-stage combination gas valve
- Spark-ignited intermittent safety pilot with electronic flame supervision
- High limit safety cutout
- Post-purge control sequence
- Terminal block wiring
- Side access for burners and controls (slide-out burner drawer)
- Adjustable fan control
- Threaded suspension couplings (2) for 1" pipe hangers

OPTIONAL FEATURES - FACTORY INSTALLED

- Unit equipped for propane gas
- E-3 (409) stainless steel heat exchanger (see note 2)
- E-3 stainless steel bottom drip pan
- E-3 (409) stainless steel burner (see note 2)
- Gas Controls
  - Spark-ignited intermittent safety pilot with electronic flame supervision and timed lockout
  - Two-stage gas controls
  - Electronic modulation - 50%-100% firing rate
  - Electronic modulation gas control, 20/28%-100% firing rate - not available on size 350
- Burner air shutters (required for units equipped for propane gas)
- 208/230/460/-volt/60/1 supply voltage
- High and low gas pressure switches
- Right side controls (facing air stream)

REZNOR®

SC GAS-FIRED DUCT FURNACE - SERIES 6 continued

OPTIONAL FEATURES - FIELD INSTALLED

- Condensate drain flange kit
- Manual shut-off valve and union
- Room override for electronic modulation with ductstat
- Horizontal or vertical combustion air inlet/vent terminal assembly - installation required
- Single-stage thermostat
- Thermostat guard with locking cover

NOTES:

1. Regulated combination redundant gas valve consists of combination pilot solenoid valve, electric gas valve, pilot filter, pressure regulator, pilot shut-off, and manual shut-off, all in one body. Gas supply pressure must not exceed 0.5 PSI (8 oz. - 14" w.c.). Minimum inlet pressure for natural gas is 5" w.c. or as noted on the rating plate. Minimum inlet pressure for propane gas is 11" w.c.
2. For air inlet temperatures below 40°F or temperature rise less than 40°F, an optional stainless steel heat exchanger is recommended.
3. See temperature rise and pressure drop tables.
4. Blower must be placed on entering side of furnace.
5. Approved for installation downstream of an air conditioning coil (optional drain flange, stainless steel heat exchanger, and stainless steel burners are recommended).
6. Not approved for residential use.

TECHNICAL DATA

Model SC	Size		100	125	150	175	200	225	250	300	350	400
Input Heating Capacity	BTUH		100,000	125,000	150,000	175,000	200,000	225,000	250,000	300,000	350,000	400,000
	kW		29.3	36.6	44.0	51.3	58.6	65.9	73.3	87.9	102.6	117.2
Output Heating Capacity (80%) A	BTUH		80,000	100,000	120,000	140,000	160,000	180,000	200,000	240,000	280,000	320,000
	kW		23.4	29.3	35.2	41.0	46.9	52.8	58.6	70.3	82.1	93.8
Full Load Amps (115V)			1.9									
Unit Control Amps (24V)			0.83									
Air Volume w/Finger-Baffles	cfm		820-1,480	1,025-1,850	1,235-2,200	1,440-2,590	1,645-2,960	1,850-3,330	2,055-3,700	2,465-4,440	2,880-5,185	3,290-5,925
	m^3/hr		1,393-2,514	1,741-3,143	2,098-3,738	2,446-4,400	2,795-5,029	3,143-5,657	3,491-6,286	4,188-7,543	4,893-8,809	5,590-10,066
Air Volume w/o Finger-Baffles B	cfm		985-3,700	1,230-4,630	1,480-5,555	1,725-6,480	1,975-7,405	2,020-8,330	2,465-9,255	2,960-11,110	3,455-12,960	3,950-14,815
	m^3/hr		1,673-6,286	2,090-7,866	2,514-9,438	2,931-11,009	3,355-12,581	3,432-14,152	4,188-15,724	5,029-18,875	5,870-22,018	6,711-25,170
Net Weight	lbs		158	178	203		283		321		350	410
	kg		72	81	92		128		146		159	186
Ship Weight	lbs		184	204	244		314		354		384	447
	kg		83	93	111		142		161		174	203
Gas Connection (in.) Natural C			1/2							3/4		
Maximum Vent Length C	6" Pipe	ft	40	50							30	
		M	12.2	15.2							9.1	
	7" Pipe	ft	N/A				70					
		M	N/A				21.3					

A In U.S. ratings are for altitudes to 2,000 feet. Above 2,000 feet derate by orifice change, 4% for each 1,000 feet above sea level. In Canada ratings are for altitudes to 2,000 feet. For high altitude units (2,001-4,500 ft.) derate by 10% of maximum input.

B For high air volume the finger-baffles in the heat exchanger section are removed during unit installation. See installation manual for instructions.

C Sizes shown are for natural gas connections, NOT supply line size. Propane gas connection is 1/2" for all sizes.

REZNOR®

SC GAS-FIRED DUCT FURNACE - SERIES 6 continued

DIMENSIONS ±1/8” (3MM)

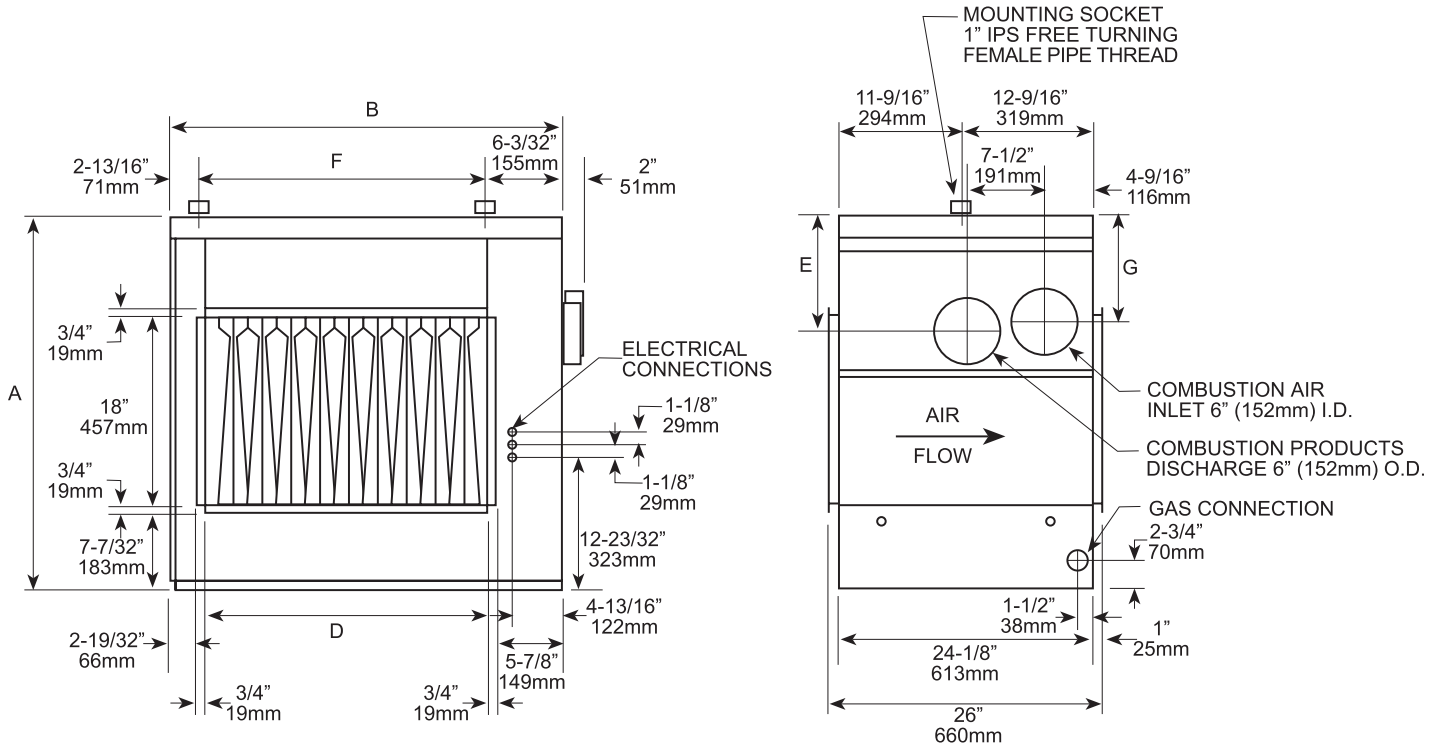

REAR VIEW (SUPPLY AIR VIEW)

SIDE VIEW

Size		A	B	D	E	F	G
100	in.	32 1/4	22 15/32	12 1/2	8 1/8	13 9/16	6 15/16
	mm	819	571	318	206	344	176
125	in.	32 1/4	25 7/32	15 1/4	8 1/8	16 15/16	6 15/16
	mm	819	641	387	206	430	176
150, 175	in.	32 1/4	30 23/32	20 3/4	8 1/8	21 13/16	6 15/16
	mm	819	780	527	206	554	176
200, 225	in.	35 1/4	36 7/32	26 1/4	10 3/4	27 5/16	9 15/16
	mm	895	920	667	273	694	252
250, 300	in.	35 1/4	44 15/32	34 1/2	10 3/4	35 9/16	9 15/16
	mm	895	1130	876	273	903	252
350	in.	35 1/4	49 31/32	40	10 3/4	41 1/16	9 15/16
	mm	895	1269	1016	273	1043	252
400	in.	35 1/4	55 15/32	45 1/2	10 3/4	46 9/16	9 15/16
	mm	895	1409	1156	273	1183	252

CLEARANCE FROM COMBUSTIBLES

1. Top, flue connections, side opposite controls - 6” (152mm)
2. Bottom - 6” (152mm)
3. Control side - width of unit plus 6” (152mm)

NOTES

1. Standard airflow as shown. Direction of airflow may be reversed by field relocation of airflow baffles.
2. See venting arrangements section for more information.
3. Burner and control access shown left hand side. Specify right hand side for opposite access and connections.

X GAS-FIRED, GRAVITY-VENTED DUCT FURNACE

INDOOR, GAS-FIRED, GRAVITY-VENTED DUCT FURNACE FOR COMMERCIAL/INDUSTRIAL USE



The first ever commercial gas-fired unit heaters with over 90% fuel efficiency was introduced on a Reznor® X Series Duct Furnaces are designed to provide 80% thermal efficiency for indoor application with gravity venting. They are certified for use with natural or propane gas, as specified, in sizes from 75,000 through 400,000 BTUH input. These models are used as heating components in heating, heating/cooling, or makeup air systems and require a separate blower system for air delivery. The furnace has a Reznor Thermocore® aluminized steel heat exchanger with venturi-design tubes. The die-formed burners are of aluminized steel and include flared ports with a stainless steel insert.

The Model X furnace is approved for a temperature rise of 50°F to 90°F and includes “finger-baffles” for proper air distribution at these lower air volumes. Removing the finger-baffles increases the airflow. These field converted units are approved for a temperature rise of 20°F to 75°F.

Standard features include a spark ignition pilot and a single-stage, 24-volt gas valve. Model X units are wired for field connection to a remote 24-volt thermostat for automatic operation. Each unit is provided with all required limit and safety controls, including a blocked vent shut-off system.

FACTORY INSTALLED OPTIONS

- Orifices for natural gas
- Aluminized steel heat exchanger
- Aluminized steel burners with stainless steel insert
- 120-volt supply voltage
- 24 volt control voltage transformer
- High limit safety cutout
- Single-stage combination gas valve (see note 1)
- Side access for burners and controls (left side facing air stream)
- Horizontal or vertical flue discharge
- Spark-ignited pilot
- Fan control
- Terminal blocks for connecting field wiring
- Blocked vent shut-off system

OPTIONAL FEATURES - FACTORY INSTALLED

- Unit equipped for propane gas
- E-3 (409) stainless steel heat exchanger (see note 2)
- E-3 (409) stainless steel burners (see note 2)
- E-3 (409) stainless steel drip pan (see note 2)
- Gas Controls
- Spark-ignited intermittent safety pilot with electronic flame supervision
- Spark-ignited intermittent safety pilot with electronic flame supervision and timed lockout
- Two-stage controls
- Electronic modulation - 50%-100% firing rate
- Burner air shutters (required on units equipped with propane gas)
- 208/230/460-volt alternate supply voltage
- Right side controls (facing airstream)

NOTES:

1. Regulated combination redundant gas valve consists of combination pilot solenoid valve, electric gas valve, pilot filter, pressure regulator, pilot shut-off, and manual shut-off, all in one body. Gas supply pressure must not exceed 0.5 PSI (8 oz. - 14” w.c.). Minimum inlet pressure for natural gas is 5” w.c. Minimum inlet pressure for propane gas is 11” w.c.
2. For air inlet temperatures below 40°F or temperature rise less than 40°F, an optional stainless steel heat exchanger is recommended.
3. See temperature rise and pressure drop tables.
4. Blower must be placed on entering side of furnace.
5. Approved for installation downstream of an air conditioning coil (optional drain flange, stainless steel heat exchanger, and stainless steel burners are recommended).
6. Not approved for residential use.

REZNOR®

X GAS-FIRED, GRAVITY-VENTED DUCT FURNACE continued

OPTIONAL FEATURES - FIELD INSTALLED

- Single-stage thermostat
- Two-stage thermostat
- Electronic room override (makeup air applications only)
- Thermostat guard with locking cover
- Manual shut-off valve and union
- Power venter with venter adapter
- Condensate drain flange kit
- Disconnect switch (UL Listed)

TECHNICAL DATA

Model X	Size	75	100	125	150	175	200	225	250	300	350	400
Input Heating Capacity	BTUH	75,000	100,000	125,000	150,000	175,000	200,000	225,000	250,000	300,000	350,000	400,000
	kW	22.0	29.3	36.6	44.0	51.3	58.6	65.9	73.3	87.9	102.6	117.2
Output Heating Capacity (80%) A	BTUH	60,000	80,000	100,000	120,000	140,000	160,000	180,000	200,000	240,000	280,000	320,000
	kW	17.6	23.4	29.3	35.2	41.0	46.9	52.8	58.6	70.3	82.1	93.8
Full Load Amps (115V)		0.2										
Unit Control Amps (24V)		0.3										
Air Volume w/Finger-Baffles	cfm	610-1,105	815-1,475	1,020-1,840	1,225-2,210	1,430-2,580	1,635-2,945	1,840-3,315	2,045-3,685	2,455-4,420	2,865-5,160	3,275-5,895
	m^3/hr	1,036-1,877	1,385-2,506	1,733-3,126	2,081-3,755	2,429-4,383	2,778-5,003	3,126-5,632	3,474-6,261	4,171-7,509	4,867-8,767	5,564-10,015
Air Volume w/o Finger-Baffles B	cfm	735-2,765	980-3,685	1,225-4,605	1,475-5,530	1,720-6,450	1,965-7,370	2,210-8,295	2,455-9,215	2,945-11,060	3,440-12,900	3,930-14,745
	m^3/hr	1,249-4,698	1,665-6,261	2,081-7,824	2,506-9,395	2,922-10,958	3,338-12,521	3,755-14,093	4,171-15,656	5,003-18,790	5,844-21,916	6,677-25,051
Net Weight	lbs	150	150	163	182	186	224	231	276	286	320	355
	kg	68		74	83	84	102	105	125	130	145	161
Ship Weight	lbs	170		200	220	230	275	290	350	360	390	420
	kg	77		91	100	104	125	132	159	163	177	191
Gas Connection (in.) Natural C		1/2								3/4		
Flue Size		5" Round	6" Round	7" Oval	8" Oval		8" Round		10" Oval		12" Oval	

A In U.S. ratings are for altitudes to 2,000 feet. Above 2,000 feet derate by orifice change, 4% for each 1,000 feet above sea level. In Canada ratings are for altitudes to 2,000 feet. For high altitude units (2,001-4,500 ft.) derate by 10% of maximum input.

B For high air volume the finger-baffles in the heat exchanger section are removed during unit installation. See installation manual for instructions.

C Sizes shown are for natural gas connections and are applicable to single stage gas valves, NOT supply line size. Propane gas connection is 1/2" for all sizes.

REZNOR®

X GAS-FIRED, GRAVITY-VENTED DUCT FURNACE continued

DIMENSIONS ±1/8” (3MM)

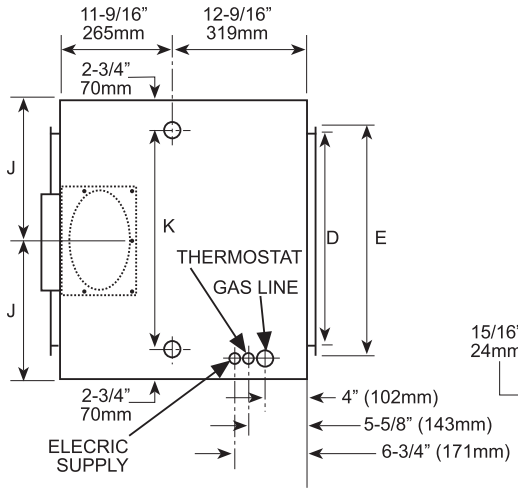

TOP VIEW

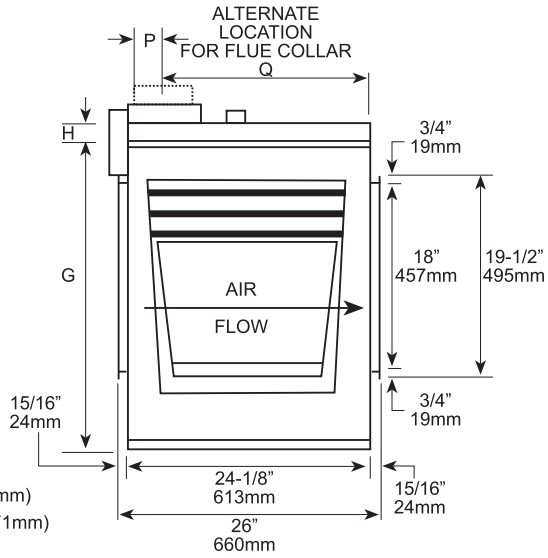

SIDE VIEW

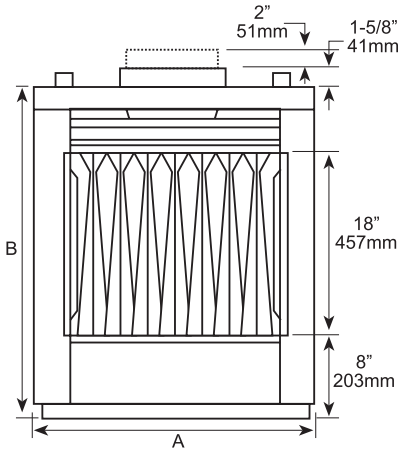

FRONT VIEW

Size		A	B	D	E	G	H	J	K	P	Q
75	in.	19 1/4	32 1/4	12 1/2	14	30 1/4	2	9 5/8	13 3/4	3 1/2	20 3/4
	mm	489	819	318	356	768	51	244	349	89	527
100	in.	19 1/4	32 1/4	12 1/2	14	30 1/4	2	9 5/8	13 3/4	3 1/2	20 3/4
	mm	489	819	318	356	768	51	244	349	89	527
125	in.	22	32 1/4	15 1/4	16 3/4	30 1/4	2	11	16 1/2	3 1/2	20 3/4
	mm	559	819	387	425	768	51	279	419	89	527
150, 175	in.	27 1/2	32 1/4	20 3/4	22 1/4	30 1/4	2	13 3/4	22	3 1/2	20 3/4
	mm	699	819	527	565	768	51	349	559	89	527
200, 225	in.	33	35 1/4	26 1/4	27 3/4	31 3/4	3 1/2	16 1/2	27 1/2	5	19 1/4
	mm	838	895	667	705	806	89	419	699	127	489
250, 300	in.	41 1/4	35 1/4	34 1/2	36	31 3/4	3 1/2	20 5/8	35 3/4	5	19 1/4
	mm	1,048	895	876	914	806	89	524	908	127	489
350	in.	46 3/4	35 1/4	40	41 1/2	31 3/4	3 1/2	23 3/8	41 1/4	5	19 1/4
	mm	1,187	895	1,016	1,054	806	89	594	1,048	127	489
400	in.	52 1/4	35 1/4	45 1/2	47	31 3/4	3 1/2	26 1/8	46 3/4	5	19 1/4
	mm	1,327	895	1,156	1,194	806	89	664	1,187	127	489

CLEARANCE FROM COMBUSTIBLES

1. Top, flue connections, side opposite controls - 6” (152mm)
2. Control side - unit width plus 6” (152mm)
3. Bottom - 3” (76mm)

NOTES

1. Burner and control access shown left hand side. Specify right hand for opposite access and connections (Option AJ2).
2. Standard airflow as shown. Direction of airflow may be reversed by field relocation of air baffles.
3. See power venting arrangement section for more information.

REZNOR®

HRPD DUAL DUCT FURNACE



OUTDOOR, POWER-VENTED,DUAL DUCT FURNACES

Reznor® Model HRPD Series Rooftop Dual Duct Furnaces are designed to be used in series as the heating component in a heating, heating/cooling, or makeup air system. Each of the dual furnaces is certified for 80% thermal efficiency for use with either natural or propane gas, as specified. Eight sizes are available from 250,000 through 800,000 BTUH input. Each furnace includes an integral power vent system which provides metered combustion air, dilutes flue products, and eliminates the need for vent caps. The weatherized, aluminized steel cabinets are mounted on 12 gauge zinc grip rails designed for setting directly on a roof or slab surface. A separate blower system, such as Reznor Model RBL, is required for air delivery.

Each furnace has a Thermocore® aluminized steel heat exchanger with venturi-design tubes. The die-formed burners are of aluminized steel and include flared ports with a stainless steel insert.

Standard features for each furnace include a spark-ignited intermittent pilot and a single stage, 24-volt gas valve. Each furnace has all the required limit and safety controls including a venter pressure switch which verifies power venter flow prior to allowing operation of the gas valve.

STANDARD FEATURES

- Orifices for natural gas
- Aluminized steel heat exchangers (When inlet air temperature is below 40°F or temperature rise is less than 40°F, optional stainless steel heat exchanger is recommended.)
- Aluminized steel burners with stainless steel insert
- 120-volt supply voltage
- 24-volt control voltage transformers
- Redundant, single-stage combination gas valves
- Spark-ignited intermittent safety pilots with electronic flame supervision
- High limit safety cutouts
- Power venters
- Differential air pressure switches to verify vent flow
- Terminal block wiring
- Left side access for burners and controls (slide out burner drawers)
- Fan control
- Weatherized cabinet with interlocking joints (U.S. Patent No. 5,373,653) and mounting rails

OPTIONAL FEATURES - FACTORY INSTALLED

- Orifices for propane gas
- Elevations to 9,000 ft
- 409 stainless steel heat exchangers
- 409 stainless steel burners
- 409 stainless steel bottom pans
- Burner Controls for Recirculated Heating
  - **Two-stage** gas valve on each furnace (operate in tandem from 2-stage room thermostat)

OPTIONAL FEATURES - FACTORY INSTALLED CONTINUED

  - **Electronic modulation**, 50-100% tandem operation from room thermostat
- Gas Controls for Makeup Air
  - **Two-stage operation** with 1-stage gas valve and 2-stage ductstat (50 or 100%)
  - **Four-stage operation** with 2-stage gas valves controlled from 2-stage ductstats with either unit-mounted controls or remote electronic controls with or without display module
  - **4:1 Turndown Electronic modulation** (25% of full output) with duct probe (55-90°F) with unit setpoint, with remote adjustment, or with signal conditioner for customer-provided computer control
  - **8:1 Turndown Electronic modulation** (12% of full fire output) 20-100% firing rate on first furnace controlled from ductstat with remote adjustment and 2-stage with outside air stat on second furnace or same turndown capability with signal conditioner for customer-provided computer control – 8:1 turndown electronic modulation requires stainless steel heat exchangers, burners, and bottom pans (8:1 turndown not available on Size 700)
- Voltage supply, 208, 230, or 460 single phase
- Intermittent spark pilots with timed lockout
- Right side controls (right when facing airstream)
- High and low gas pressure switches
- Airflow proving switch
- Curb cap base

HRPD DUAL DUCT FURNACE continued

OPTIONAL FEATURES - FIELD INSTALLED

- Vent extension kits
- 24V, one or two stage, heating only or heating/cooling thermostats
- Room override thermostat for electronic modulation
- Thermostat guard with locking cover
- Packaged switches, 2 or 3 position
- Disconnect switch (UL listed)

NOTES:

1. Burner and control access shown left hand side (standard). Specify right hand side for opposite access and connections.
2. Standard airflow as shown. Direction of airflow may be reversed by field relocation of airflow baffles in the heat exchangers. These furnaces must be disassembled to change airflow direction as well as the baffle change.
3. One-inch fiberglass insulation full length and width of top.
4. Approved for installation downstream of an air-conditioning coil (optional stainless steel heat exchangers, stainless steel burners, and stainless steel bottom sections are recommended).
5. Not approved for residential use.

TECHNICAL DATA

Model HRPD	Size	250	300	350	400	500	600	700	800
Input Heating Capacity	BTUH	250,000	300,000	350,000	400,000	500,000	600,000	700,000	800,000
	kW	73.3	87.9	102.6	117.2	146.6	175.9	205.2	234.5
Output Heating Capacity (80%) A	BTUH	200,000	240,000	280,000	320,000	400,000	480,000	560,000	640,000
	kW	58.6	70.3	82.1	93.8	117.2	140.7	164.1	187.6
Standard Full Load Amps	120V	3.8							
Standard Control Amps	24V	1.66							
Temperature Rise Range (two furnaces @ full rate)		40°F - 100°F							
Air Volume Range	cfm	1,855-4,630	2,225-5,555	2,595-6,480	2,965-7,405	3,705-9,255	4,445-11,110	5,185-12,960	5,925-14,815
	m^3/hr	3,147-7,866	3,775-9,440	4,406-11,011	5.034-12,585	6,293-15,731	7,550-18,878	8,809-22,024	10,068-25,171
Net Weight	lbs	402	434		494	590		666	722
	kg	182	197		224	268		302	327
Ship Weight	lbs	464	528		566	666		744	806
	kg	210	240		257	302		337	366
Gas Connection (in.) Natural B	Natural	1/2					3/4		
	Propane	1/2							

A Ratings are to 2000 ft elevation. In the United States, above 2000 ft derate is by orifice change; 4% for each 1000 ft above sea level. In Canada, above 2,000 ft to 4,500 ft, derate is by 10% of maximum input.

B Units are manifolded to single gas connection.

HRPD DUAL DUCT FURNACE continued

DIMENSIONS ±1/8" (3MM)

Size		A	B	C	D	E
250	in.	30 15/16	28 1/2	15 1/4	20 5/16	3 3/32
	mm	786	724	387	516	79
300	in.	36 7/16	34	20 3/4	25 13/16	1 21/32
	mm	926	864	527	656	42
350	in.	36 7/16	34	20 3/4	25 13/16	1 21/32
	mm	926	864	527	656	42
400	in.	41 15/16	39 1/2	26 1/4	31 5/16	1 21/32
	mm	1,065	1,003	667	795	42
500	in.	50 3/16	47 3/4	34 1/2	39 9/16	1 21/32
	mm	1,275	1,213	876	1,005	42
600	in.	50 3/16	47 3/4	34 1/2	39 9/16	1 21/32
	mm	1,275	1,213	876	1,005	42
700	in.	55 11/16	53 1/4	40	45 1/16	1 21/32
	mm	1,414	1,353	1,016	1,145	42
800	in.	61 3/16	58 3/4	45 1/2	50 9/16	1 21/32
	mm	1,554	1,492	1,156	1,284	42

	inches	mm
Top	36	914
Side opposite controls	6	152
Control side - unit width plus	6	152
Bottom - Unit is certified for installation on a combustible surface when equipped with standard heater mounting rails.		

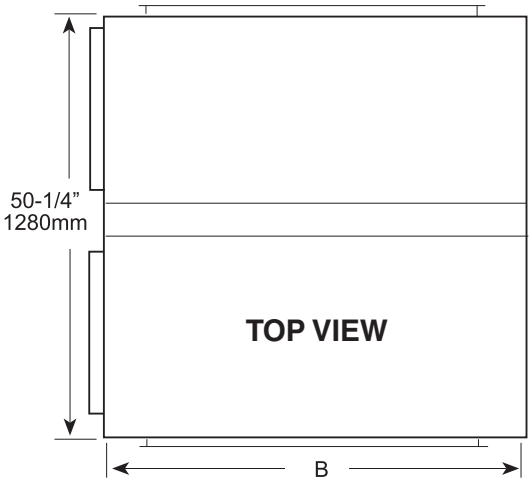

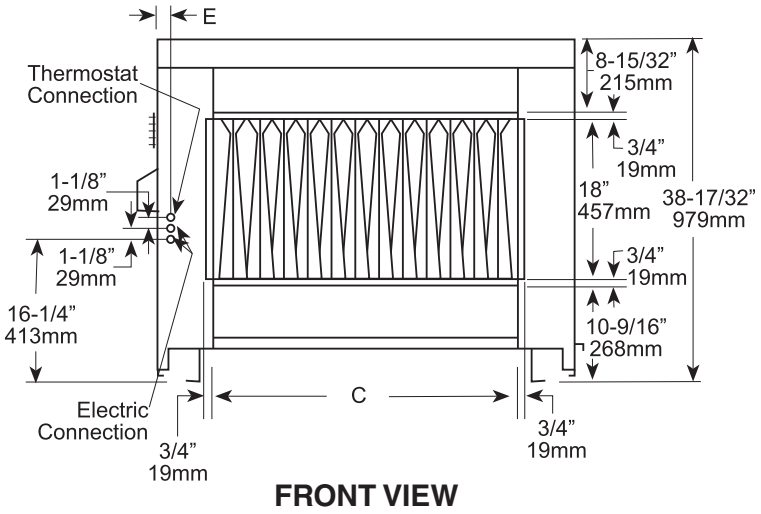

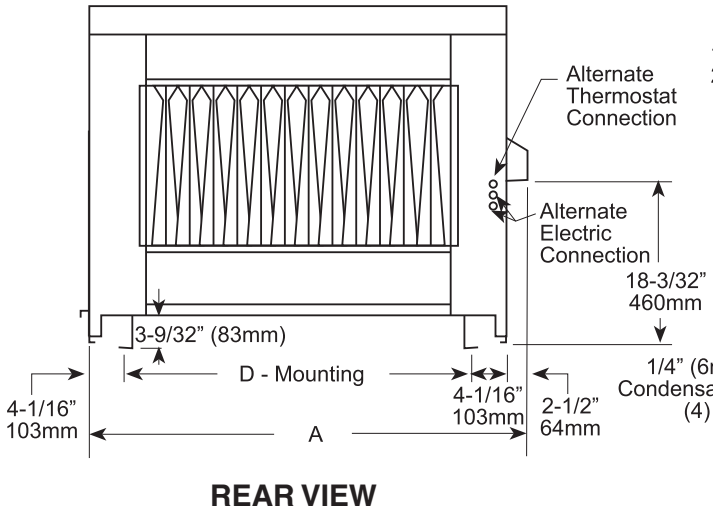

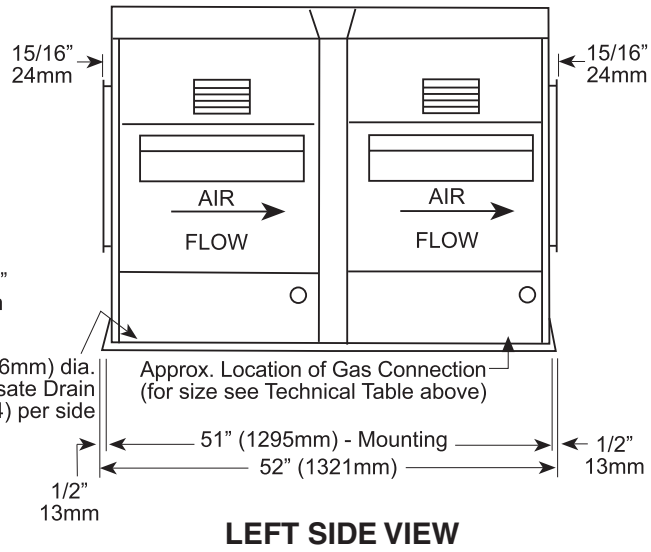

REZNOR®

RP GAS-FIRED, POWER-VENTED DUCT FURNACE



ROOFTOP, GAS-FIRED, POWER-VENTED DUCT FURNACE FOR COMMERCIAL/INDUSTRIAL USE

Reznor® RP Series Rooftop Duct Furnaces are designed to be used as the heating component in a heating, heating/cooling, or makeup air system. The RP Series furnaces are certified for 80% thermal efficiency for use with either natural or propane gas, as specified, in sizes from 125,000 through 400,000 BTUH input. The furnace includes an integral power vent system which provides metered combustion air, dilutes flue products, and eliminates the need for a vent cap. The weatherized, aluminized steel cabinet is designed for outdoor mounting. A separate blower system is required for air delivery.

The furnace has a Thermocore® aluminized steel heat exchanger with venturi-design tubes. The die-formed burners are of aluminized steel and include flared ports with a stainless steel insert.

The Model RP furnace is approved for a temperature rise of 50°F to 90°F and includes “finger-baffles” for proper air distribution at these lower air volumes. Removing the finger-baffles increases the airflow and decreases the temperature rise. For temperature rise ranges, please see the table on page 17.

Standard features include a spark-ignited intermittent pilot and a single-stage 24-volt gas valve. Each unit has all the required limit and safety controls including a venter pressure switch which verifies power vent flow prior to allowing operation of gas valve. For automatic operation, each unit is wired for field connection to a remote 24-volt thermostat.

STANDARD FEATURES

- Orifices for natural gas
- Aluminized steel heat exchanger (When inlet air temperature is below 40°F or temperature rise is less than 40°F, optional stainless steel heat exchanger is recommended.)
- Aluminized steel burners with stainless steel insert
- 120-volt supply voltage
- 24-volt control voltage transformer
- Redundant, single-stage combination gas valve
- Spark-ignited, intermittent safety pilot with electronic flame supervision
- High limit safety cutout
- Power venter
- Differential air pressure switch to verify vent flow
- Terminal block wiring
- Left side access for burners and controls (slide out burner drawer)
- Fan control
- Weatherized steel cabinet with interlocking joints for outdoor mounting

OPTIONAL FEATURES - FACTORY INSTALLED

- Orifices for propane gas
- Elevations from 2,001 to 9,000 ft.
- 409 stainless steel heat exchanger
- 409 stainless steel burners
- 409 stainless steel bottom pan
- Burner Controls for Recirculated Heating
  - Two-stage gas valve
  - Electronic Modulation
- Gas Controls for Make up Air
  - Two-stage gas valve with ductstat
  - Electronic modulation - 50%-100% firing rate with duct probe (55°-90°F)
  - Electronic modulation - 50%-100% firing rate with duct probe (55°-90°F) and remote adjustment
  - Electronic modulation - 20/28%-100% firing rate not available on size 350
- Intermittent spark pilot with timed lockout
- Voltage - 208/230/460
- Right side controls (facing airstream)
- High and low pressure gas switches

NOTES:

1. Burner and control access shown left hand side (standard). Specify right hand side for opposite access and connections.
2. Standard airflow as shown. Direction of airflow may be reversed by field relocation of airflow baffles in the heat exchanger.
3. To install units side-by-side, specify one unit with standard left-hand controls and one unit with optional right-hand controls. Ductwork must attach only to separate duct flanges, never attach duct to heater cabinet.
4. All casing parts are suitable for outdoor installation. Heater mounting rails are 12 Ga. zinc grip steel.
5. One inch thick fiberglass insulation full length and width of top.
6. Approved for installation downstream of an air conditioning coil (optional drain flange, stainless steel heat exchanger, and stainless steel burners are recommended).
7. Not approved for residential use.

RP GAS-FIRED, POWER-VENTED DUCT FURNACE continued

OPTIONAL FEATURES - FIELD INSTALLED

- Vertical vent terminal
- One-stage thermostat
- Two-stage thermostat
- Electronic modulating room override thermostat
- Thermostat guard with locking cover
- Manual gas shut-off valve and union
- Disconnect switch (UL Listed)

TECHNICAL DATA

Model RP	Size	125	150	175	200	225	250	300	350	400
Input Heating Capacity	BTUH	125,000	150,000	175,000	200,000	225,000	250,000	300,000	350,000	400,000
	kW	36.6	44.0	51.3	58.6	65.9	73.3	87.9	102.6	117.2
Output Heating Capacity (80%) A	BTUH	100,000	120,000	140,000	160,000	180,000	200,000	240,000	280,000	320,000
	kW	29.3	35.2	41.0	46.9	52.8	58.6	70.3	82.1	93.8
Full Load Amps (120V)		1.9								
Unit Control Amps (24V)		0.83								
Air Volume w/Finger-Baffles	cfm	1,020-1,840	1,225-2,210	1,430-2,580	1,635-2,945	1,840-3,315	2,045-3,685	2,455-4,420	2,865-5,160	3,275-5,895
	m^3/hr	1,733-3,126	2,081-3,755	2,429-4,383	2,778-5,003	3,126-5,632	3,474-6,261	4,171-7,509	4,867-8,767	5,564-10,015
Air Volume w/o Finger-Baffles (US) B	cfm	1,225-4,605	1,475-5,530	1,720-6,450	1,965-7,370	2,210-8,295	2,455-9,210	2,945-11,060	3,440-12,900	3,930-14,745
	m^3/hr	2,081-7,824	2,506-9,395	2,922-10,958	3,338-12,521	3,755-14,093	4,171-15,647	5,003-18,790	5,844-21,916	6,677-25,051
Air Volume w/o Finger-Baffles (Canada) B	cfm	1,840-4,605	2,210-5,530	2,580-6,450	2,940-7,370	3,315-8,295	3,685-9,210	4,420-11,060	5,160-12,900	5,895-14,745
	m^3/hr	3,126-7,824	3,755-9,395	4,383-10,958	4,995-12,521	5,632-14,093	6,261-15,647	7,509-18,790	8,767-21,916	10,015-25,051
Net Weight	lbs	201	217		247		295		333	361
	kg	91	98		112		134		151	164
Ship Weight	lbs	232	264		283		333		372	403
	kg	105	120		128		151		169	183
Gas Connection (in.) Natural C		1/2”						3/4”		

TEMPERATURE RISE RANGE		
U.S.	Temperature Rise w/Air-Baffles	50°F - 90°F
	Temperature Rise w/o Air-Baffles B	20°F - 75°F
Canada	Temperature Rise w/Air-Baffles	50°F - 90°F
	Temperature Rise w/o Air-Baffles B	20°F - 50°F

A In U.S. ratings are for altitudes to 2,000 feet. Above 2,000 feet derate by orifice change, 4% for each 1,000 feet above sea level. In Canada ratings are for altitudes to 2,000 feet. For high altitude units (2,001-4,500 ft.) derate by 10% of maximum input.

B For high air volume the finger-baffles in the heat exchanger section are removed during unit installation. See installation manual for instructions.

C Sizes shown are for natural gas connections and are applicable to single stage gas valves, NOT supply line size. Propane gas connection is 1/2” for all sizes.

RP GAS-FIRED, POWER-VENTED DUCT FURNACE continued

DIMENSIONS ±1/8” (3MM)

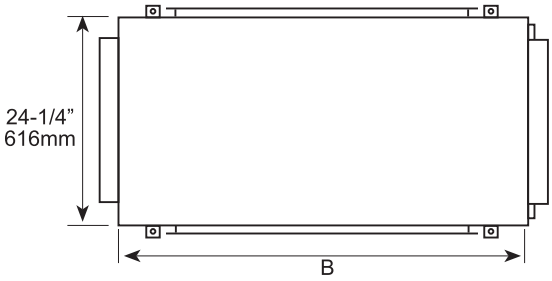

TOP VIEW

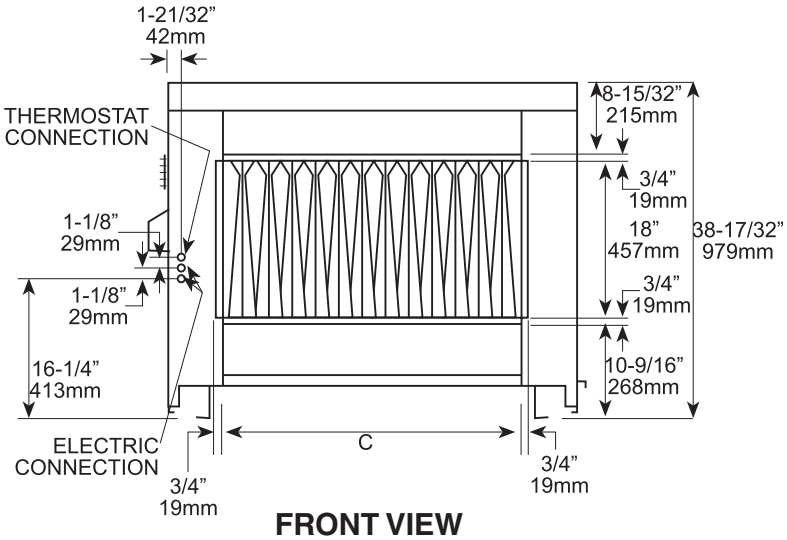

FRONT VIEW

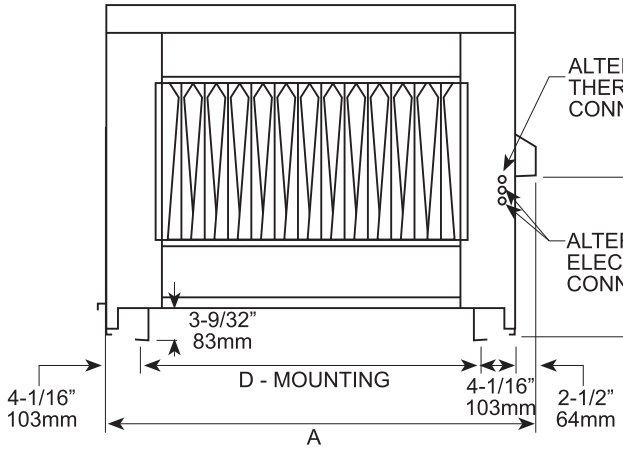

REAR VIEW

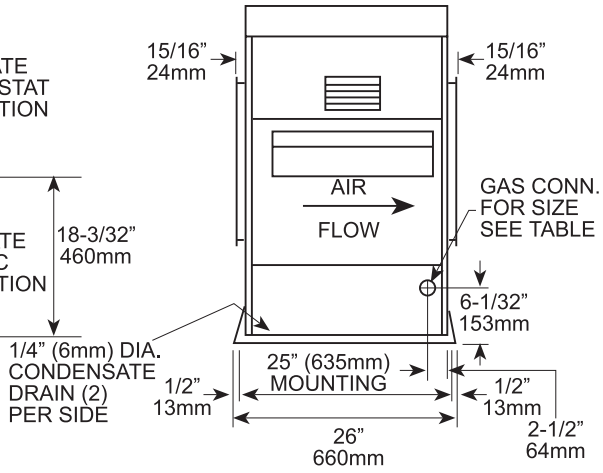

LEFT SIDE VIEW

Size		A	B	C	D	Gas Connection	
125	in.	30 15/16	28 1/2	15 1/4	20 5/16	NATURAL	1/2
	mm	786	724	387	516	LP	1/2
150	in.	36 7/16	34	20 3/4	25 13/16	NATURAL	1/2
	mm	926	864	527	656	LP	1/2
175	in.	36 7/16	34	20 3/4	25 13/16	NATURAL	1/2
	mm	926	864	527	656	LP	1/2
200	in.	41 15/16	39 1/2	26 1/4	31 5/16	NATURAL	1/2
	mm	1,065	1,003	667	795	LP	1/2
225	in.	41 15/16	39 1/2	26 1/4	31 5/16	NATURAL	1/2
	mm	1,065	1,003	667	795	LP	1/2
250	in.	50 3/16	47 3/4	34 1/2	39 9/16	NATURAL	1/2
	mm	1,275	1,213	876	1,005	LP	1/2
300	in.	50 3/16	47 3/4	34 1/2	39 9/16	NATURAL	3/4
	mm	1,275	1,213	876	1,005	LP	1/2
350	in.	55 11/16	53 1/4	40	45 1/16	NATURAL	3/4
	mm	1,414	1,353	1,016	1,145	LP	1/2
400	in.	61 3/16	58 3/4	45 1/2	50 9/16	NATURAL	3/4
	mm	1,554	1,492	1,156	1,284	LP	1/2

CLEARANCE FROM COMBUSTIBLES

1. Top - 36” (914 mm)
2. Side opposite controls - 6” (152mm)
3. Control side - unit width plus 6” (152mm)
4. Bottom - 0” (Unit is certified for installation on a combustible surface when equipped with standard heater mounting rails.)

DUCT FURNACE BLOWER ARRANGEMENTS

Proper arrangement of blower and duct furnace with respect to angle of approach of duct connection and the arrangement of the discharge opening of the blower are shown. Blowers should be bottom horizontal discharge when coupled to the duct furnace. When a top horizontal discharge blower is connected to the duct furnace, be sure that sufficient length of duct is provided to permit even flow of air at the end of the duct. Or, baffles may be inserted between the blower and the heater to assure an even flow or air across the heat exchanger.

STRAIGHT THROUGH AIR

Suggested blower connections for straight through airflow.

Use either method for good air coverage and efficient operation.

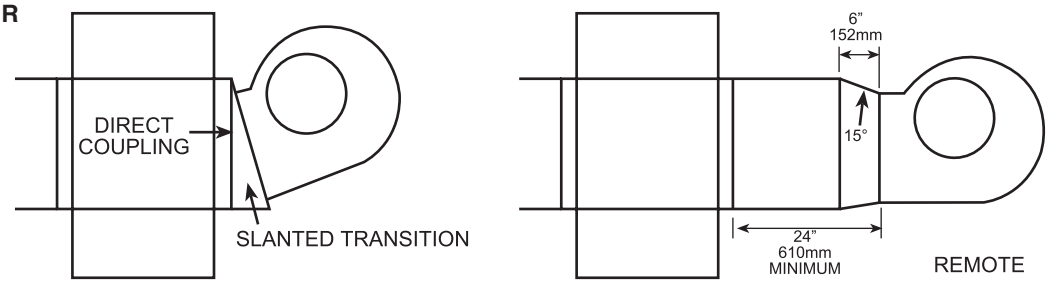

WITH ELBOWS UP OR DOWN

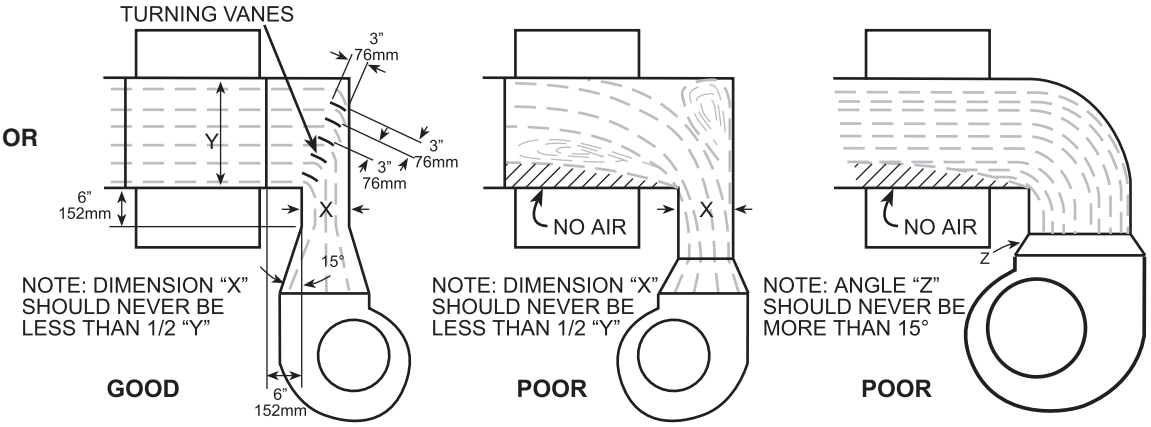

WITH ELBOWS RIGHT OR LEFT

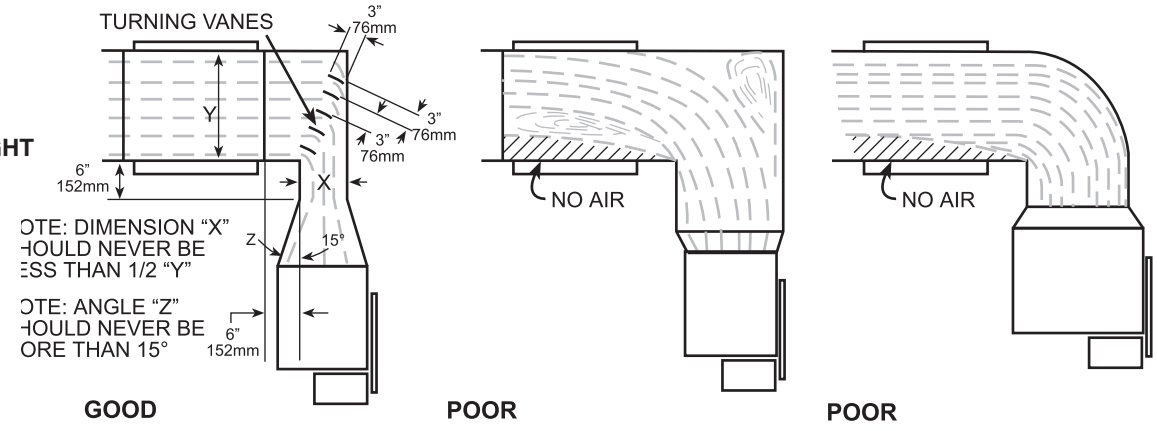

Abrupt angle approaches, such as illustrated above, can be detrimental to unit life. Be certain that ample air is directed at the base of the tube section by using turning vanes as shown.

CAUTION: Duct connections exposed to weather must be water-tight. High temperature (250°F - 121°C) caulking or sheet metal flashing should be used.

REZNOR®

ELECTRICAL SUPPLY AND CONNECTIONS

All electrical wiring and connections including electrical grounding should be made in accordance with the National Electric Code ANSI/NFPA No. 70-(latest edition) or, in Canada, the Canadian Electrical Code, Part I-C.S.A. Standard C22.1. Check any local ordinance or gas company requirements that apply

A separate line voltage supply should be run directly from the main panel to a disconnect switch, at the unit, and then making connection to leads in the unit junction box. All external wiring must be made within approved conduit and have a minimum temperature rise rating of 60°C.

The unit must be electrically grounded in accordance with the National Electrical Code, ANSI/NFPA No. 70-(latest edition) or C.S.A. Standard C22.1 when installed, if an external electrical source is used.

POWER VENTING ARRANGEMENTS

MODEL EEDU SERIES

The Model EEDU heater series is designed to operate safely and efficiently with single wall vent pipe, either vertically or horizontally. Horizontal venting is recommended for maximum fuel savings.

VENTING REQUIREMENTS

Vent Pipe - If installed with a horizontal vent run, use either vent pipe approved for a Category III heater or appropriately sealed 26-gauge galvanized steel or equivalent single-wall pipe. If at least half of the equivalent length of the vent system is vertical, vent pipe approved for a Category I heater may be used. Single-wall pipe or double-wall (Type B) vent pipe are suitable for use with a Category I heater.

Use only one of the flue pipe diameters listed in the Vent Length Tables for the furnace size being installed.

Venter Outlet - If the vent pipe used is larger than the diameter of the venter outlet (Table 2 on page 21), make the transition at the venter outlet.

The venter housing may be rotated; see the illustration below. A minimum of 12” of straight pipe is required at the venter outlet.

VENT CONNECTION AND DIRECTION

Standard venter location is shown in Figure A.

Venter housing may be rotated as shown in Figure B.

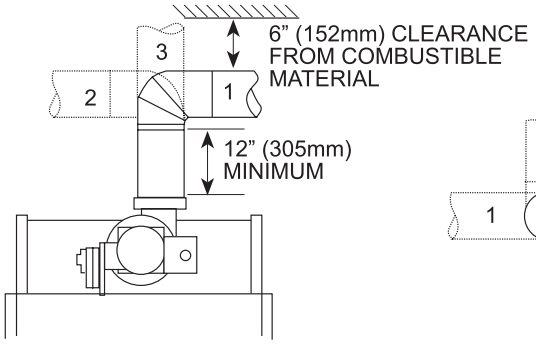

FIGURE A

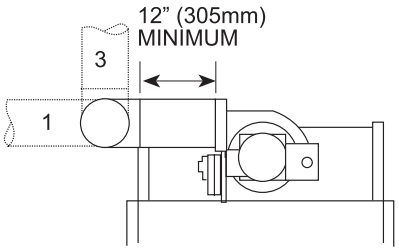

FIGURE B

CAUTION: In all positions, 6” clearance from single wall vent pipe to combustible material must be maintained, and all joints must be sealed.

WARNING: Units installed in multiples or close coupled require individual vent pipe runs and vent caps. Manifolding of vent runs is not permitted due to possible recirculation of combustion products into the building and back pressure effects on the combustion air proving switch.

WARNING: Follow all venting instructions provided with the heater.

POWER VENTING ARRANGEMENTS continued

MODEL EEDU SERIES continued

TABLE 1: Maximum Permissible Vent Lengths with Standard Vent Pipe Diameters

Size	Vent Pipe Diameter (inches)	Maximum Vent Length (feet) *A*	Equivalent Straight Length* (feet)	
			90° Elbow	45° Elbow
75	4	40	6	3
100	4	50	7	3.5
125	4	50	7	3.5
140	4	50	7	3.5
170	4	50	7	3.5
200	4	50	7	3.5
225	5	50	9	4.5
250	5	50	9	4.5
300	6	50	11	5.5
350	6	50	11	5.5
400	6	50	11	5.5

TABLE 2: Optional Maximum Permissible Vent Lengths *(Requires an increase in vent pipe diameter.)*

Size	Vent Pipe Diameter (inches)	Maximum Vent Length (feet) *A*	Equivalent Straight Length* (feet)	
			90° Elbow	45° Elbow
170	5	60	9	4.5
200	5	70	9	4.5
225	5	70	11	5.5
250	5	70	12	6
300	7	70	13	6.5
350	7	80	13	6.5
400	7	90	14	7

NOTE:
If the system contains all vertical pipe or combination of vertical and horizontal vent pipe, the Maximum Permissible Vent Length show in Tables 1 and 2 may be increased one foot for each foot of vertical pipe, up to a maximum increase of 10 feet for model sizes 75 - 125 and up to 20 feet for model sizes 140 - 400.

POWER VENTING GRAVITY UNITS - MODEL X SERIES

To avoid errors and ensure successful installation, be sure to understand the fundamental operation before taking up wiring diagrams and technical details. Install optional power venter only on the model and size of heater for which it is designed.

Always use the adapter provided for attaching the venter.

When a venter is used with a heater, the room thermostat turns the venter on and off and the venter turns the gas controls on and off. When the space calls for heat, the room thermostat contacts close the circuit which starts the venter. When the venter starts, air from the venter blower closes an air switch that is built into the venter.

The closing of the airflow switch sends an electric current to the burner controls, opening the gas valve and sending gas to the burners. When the thermostat is satisfied, the thermostat turns off the venter and the gas controls. As the venter blower stops, the airflow switch resets to the open position.

SEPARATED COMBUSTION VENTING ARRANGEMENTS

MODEL SC SERIES

Reznor® Separated Combustion Systems

For years, Reznor has pioneered in separated combustion system technology, eliminating “open flame” combustion problems. This has resulted in a complete line of Reznor products using the separated combustion principle-

- air for combustion is mechanically induced from outside the building, preventing dirt, lint, dust or other contaminants in the indoor atmosphere from entering the burner, pilot or combustion zone of the furnace,
- the airflow is metered to provide optimum and efficient combustion that is unaffected by negative building pressure or wind,
- after combustion, the air is exhausted back to the outdoor atmosphere.

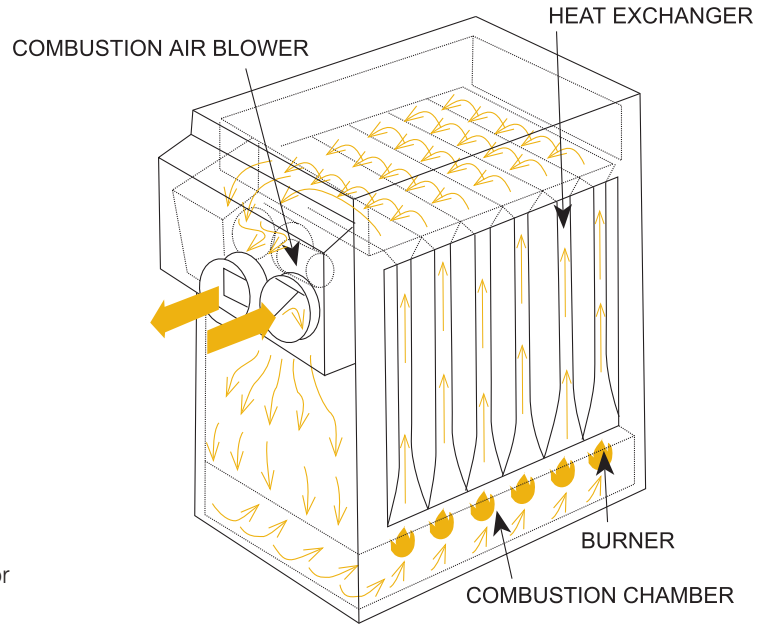

Reznor separated combustion products provide all of the benefits while requiring only one building penetration. See the venting illustration below and on page 23.

HORIZONTAL VENT TERMINAL/COMBUSTION AIR INLET ASSEMBLY - FIGURE A

Illustrations show approved vent terminals and usage. No other venting arrangements are approved or certified for use with SC Models.

Both the horizontal and vertical assemblies include: concentric adapter, screened exhaust or exhaust cap, inlet ring or combustion air inlet, vent pipe rubber seal and a tube of high temperature silicone sealant.

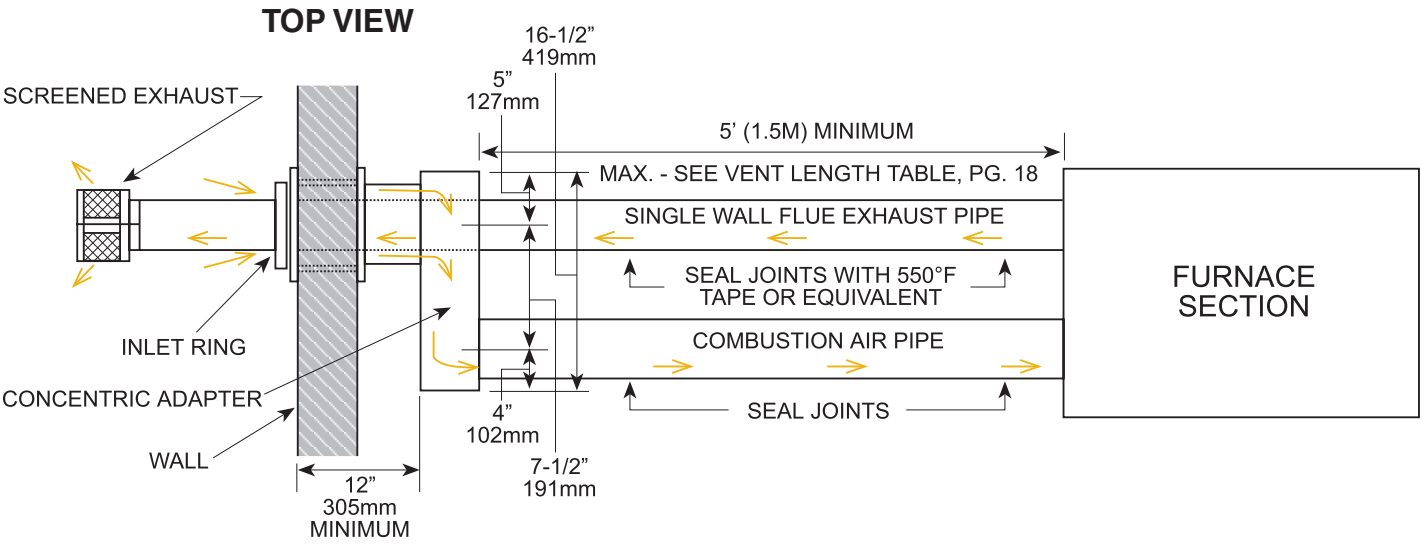

SEPARATED COMBUSTION VENTING ARRANGEMENTS continued

MODEL SC SERIES continued

HORIZONTAL VENT TERMINAL/COMBUSTION AIR INLET ASSEMBLY - FIGURE A CONTINUED

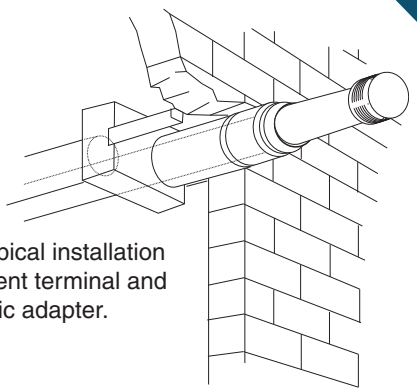

Model SC - Typical installation of horizontal vent terminal and concentric adapter.

FRONT VIEW

SEPARATED COMBUSTION VENTING ARRANGEMENTS continued

MODEL SC SERIES continued

STANDARD VERTICAL VENT TERMINAL/COMBUSTION AIR INLET ASSEMBLY - FIG. B

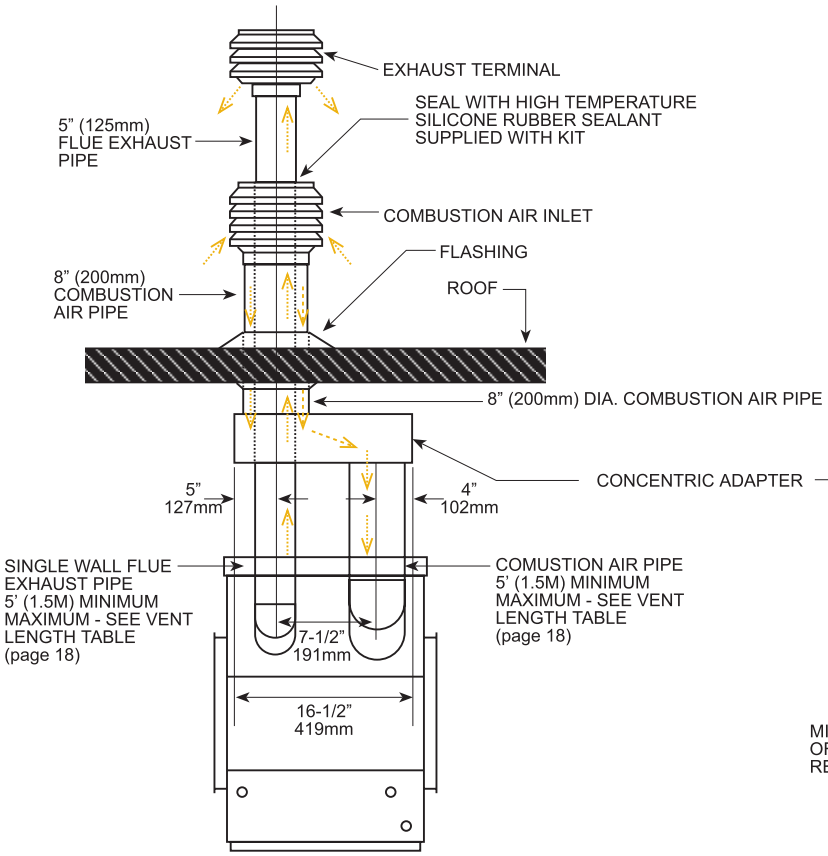

CONTROL SIDE VIEW

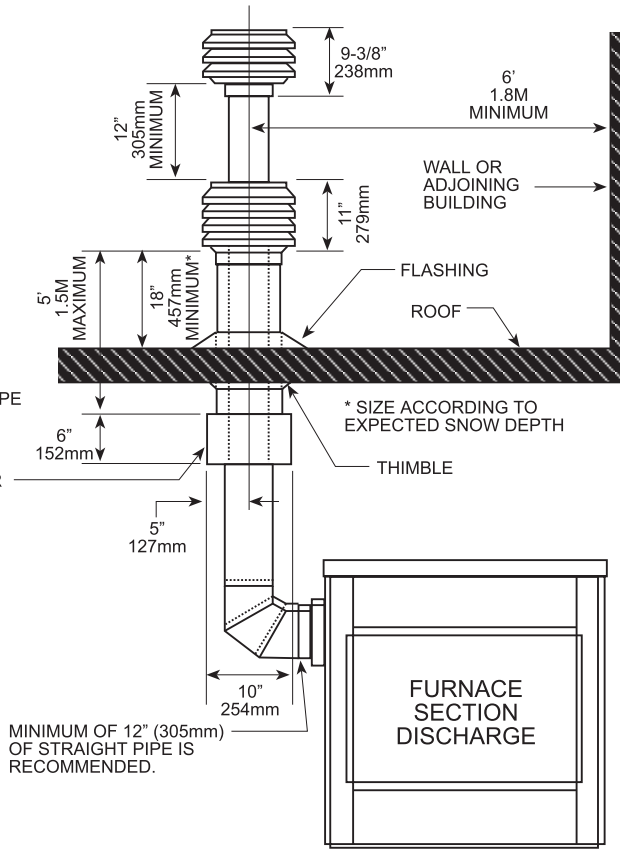

FRONT VIEW

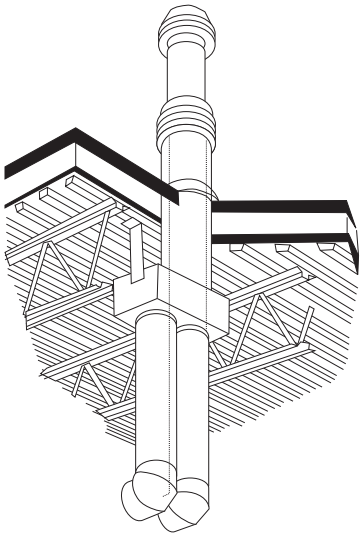

Model SC - Typical installation of vertical vent terminal and concentric adapter.

REZNOR®

SEPARATED COMBUSTION VENTING ARRANGEMENTS continued

MODEL SC SERIES continued

VENTING REQUIREMENTS

Vent terminals are required as illustrated in Figure A or B. No other venting arrangements are approved or certified for use on SC Models.

All pipes are field-supplied and should be either 26 gauge or heavier galvanized steel or a material of equivalent durability and corrosion resistance or vent pipe approved for a Category III appliance. Single wall pipe is also recommended for combustion air pipes.

All joints of the 5" flue exhaust pipe within the confines of the 8" combustion air pipe must be sealed with the high temperature silicone rubber sealant included with the kit. Some connections require taper-type pipe connectors. When the diameter change is at the heater, install the connection within six inches (152mm) of the heater. When the diameter change is at the adapter box, install the connection within six inches (152mm) of the box.

VENT LENGTHS FOR SC SERIES 6 HEATERS		
Size	**Pipe Diameter**	**Maximum Length**
100	6 inch	40 Feet
125 - 300	6 inch	50 Feet
200 - 400	7 inch	70 Feet
350 - 400	6 inch	30 Feet
90° elbow equals 8 feet of pipe. 45° elbow equals 4 feet of pipe. Minimum vent length is 5 feet.		

NOTE:
Thimble, flashing, flue pipe, combustion air pipe and taper-type connectors are field supplied. (A thimble is not required if wall or roof penetration is of noncombustible construction.)

GAS CONTROL SYSTEMS

(AVAILABLE WITH EITHER NATURAL OR PROPANE GAS UNLESS NOTED OTHERWISE.) HEATING APPLICATION OPTIONS

OPTION AG1

ONE-STAGE CONTROL:

Single-stage gas valve which cycles on at 100% fire on a call for heat. Thermostat is not included.

OPTION AG2

TWO-STAGE CONTROL:

Two-stage gas valve which fires at 100% or 50%, as required, on call by a remote two-stage thermostat. Thermostat not included.

OPTION AG7

ELECTRONIC MODULATION (55°-90°F):

Solid state control system, providing close temperature control through related manifold pressure. On a call for heat from a remote electronic thermostat, controls modulate between 50% and 100%. Remote thermostat not included.

MAKEUP AIR APPLICATION OPTIONS

OPTION AG3

TWO-STAGE CONTROL FROM DUCTSTAT (60°-110°F):

Two-stage gas valve which fires at 100% or 50% as required, on call from a unit-mounted, two-stage ductstat.

GAS CONTROL SYSTEMS continued

MAKEUP AIR APPLICATION OPTIONS continued (REQUIRE FAN CONTROL - PAGE 27)

OPTION AG15

TWO-STAGE CONTROL USING ELECTRONIC DUCTSTAT WITH REMOTE TEMPERATURE ADJUSTMENT (50°-130°F):
Same type of control as Option AG3, but the setpoint of the ductstat is adjustable from a remote temperature-selector. Includes factory-installed sensor and field-installed temperature-selector module with an adjustable stage-adapter module.

OPTION AG8

ELECTRONIC MODULATION (55°-90°F) WITH DUCTSTAT:
Solid stage control system, providing close temperature control through regulated manifold pressure. On a call for heat from a unit-mounted ductstat, controls modulate between 50% and 100%, as required. A room override thermostat (Option CL9) is available for use with this system.

OPTION AG9

ELECTRONIC MODULATION WITH DUCTSTAT AND REMOTE TEMPERATURE SELECTION:
Control is the same as Option AG8 except that the duct sensor setpoint may be reset from a remote selector. Remote temperature selector is included. A room override thermostat (Option CL9) is available for use with this system.

OPTION AG21

ELECTRONIC MODULATION WITH DDC CONTROL:
Modulation range is the same as AG8 except that it includes a signal conditioner for use with customer-supplied 4-20MA or 0-10V input signal. Includes Maxitrol A200 signal conditioner and special modulating gas regulator. Available on all duct furnace models.

NOTE: Option AG21 is designed to connect directly to a building automation system or energy management system computer. Automated controllers must be supplied by others.

OPTION AG39

ELECTRONIC MODULATION BETWEEN 20%-28% AND 100% FIRING RATE (RP/SC Models Only):
Reznor® Option AG39 (U.S. Patent 6,1090225) is an electronic modulation gas control that will provide precise control of discharge air temperature over an increased range of outside air conditions. It is available on selected sizes of Model Series SC and RP. This option allows the furnace input ratio to be fully modulated between 100% and 28 to 20%.

The part-load thermal efficiency of this system complies with and exceeds the current seventy-five percent minimum requirement of ASHRAE standard 90.1 for part-load efficiencies. This system offers an average thermal efficiency over the range of modulation that is equal to or exceeds the full input rate thermal efficiency.

Furnaces with Option AG39 require stainless steel burners, a stainless steel heat exchanger, and a stainless steel bottom pan. The gas train includes a single-stage gas valve, a modulating valve, and two gas pressure switches. The burner rack is equipped with one flash carryover and a regulated gas lighter tube system. The carryover lighter tube receives its gas supply through the regulator, simultaneously with the gas to the burner. Control of the system is through a Maxitrol #A1092 amplifier with a corresponding remote temperature dial (Maxitrol® #TD92-0509).

Sensor Location
The duct temperature sensor is factory installed in the cabinet leg. Although the sensor has a mixing tube, at this distance from the discharge it does not receive a true mix, so the temperature read by the sensor will be slightly higher than the actual air entering the ductwork. The system will provide comfort level heat if the selector is set slightly lower to compensate for this reading. The offset temperature will vary with the application. If a direct correlation of these two temperatures is required, move the duct sensor to a location in the ductwork about 10-12 feet (3-3.7M) from the furnace discharge.

NOTE: When AG39 is ordered with right hand controls (AJ2), sensor is shipped loose for field installation.

OPTION AG40

ELECTRONIC MODULATION BETWEEN 20/28% AND 100% FIRING RATE WITH DDC CONTROL (RP/SC Models Only):
Same system as AG39 but includes signal conditioner for use with customer-supplied 4-20MA or 0-10V input signal. Available on selected sizes of Model Series SC and RP.

GAS CONTROL SYSTEMS continued

MAKEUP AIR APPLICATION OPTIONS continued

Model	Size	Maximum Turndown Percent	MBH Input Range	Gas Supply Pressure Required
SC	100	20%	20 - 100	5" w.c.
RP/SC	125	20%	25 - 125	5" w.c.
RP/SC	150	27%	40.3 - 150	5" w.c.
RP/SC	175	23%	40.3 - 175	5" w.c.
RP/SC	200	26%	51.8 - 200	5" w.c.
RP/SC	225	23%	51.8 - 225	5" w.c.
RP/SC	250	28%	69 - 250	5" w.c.
RP/SC	300	23%	69 - 300	5" w.c.
RP/SC	400	25%	100 - 400	6" w.c.

FAN CONTROL

The fan control is a heat-sensitive device which operates a remote blower whenever the heat exchanger temperature is above approximately 125°F. This control provides a 45-second fan delay on start-up to prevent circulation of cold air and a delay of fan shutdown for heat dissipation. The fan control provides a safety backup by providing fan operation in case of gas valve malfunctioning in the open position.

A fan control is required with all Makeup Air Gas Control Systems described above. The fan control is factory installed and included with all makeup air gas controls except on Model EEDU. On Model EEDU, the fan control must be ordered separately and field installed

PILOT IGNITION SYSTEMS

INTERMITTENT SPARK PILOT

Automatic lighting of pilot with an electronic spark on a call for heat. Pilot gas flow is shut off between heat cycles. Certified for use with natural and propane gas for outdoor units in the United States. Certified for use with natural gas only on indoor units installed in the United States. Certified for use with natural gas only for installation of indoor and outdoor units in Canada.

INTERMITTENT SPARK PILOT WITH 100% SHUT-OFF

Automatic lighting of pilot with an electronic spark on a call for heat. Pilot gas flow is shut off between heat cycles. This system also incorporates a lockout device which stops gas flow to the pilot if the pilot fails to light in 120 seconds. Reset of lockout requires manual interruption of thermostat cycle. Certified for use with natural or propane gas.

SIZING GAS SUPPLY LINES

CAPACITY OF PIPING
Cubic Feet Per Hour Based on 0.3" w.c. Pressure Drop
Specific Gravity for Natural Gas - 0.6 (1000BTU/CU Foot) • Specific Gravity for Propane Gas - 1.6 (2550 BTU/CU Foot)

Length of Pipe	Diameter of Pipe											
	1/2"		3/4"		1"		1-1/4"		1-1/2"		2"	
	Natural	Propane	Natural	Propane	Natural	Propane	Natural	Propane	Natural	Propane	Natural	Propane
20'	92	56	190	116	350	214	730	445	1100	671	2100	1281
30'	73	45	152	93	285	174	590	360	890	543	1650	1007
40'	63	38	130	79	245	149	500	305	760	464	1450	885
50'	56	34	115	70	215	131	440	268	670	409	1270	775
60'	50	31	105	64	195	119	400	244	610	372	1105	674
70'	46	28	96	59	180	110	370	226	560	342	1050	641
80'	43	26	90	55	170	104	350	214	530	323	990	604
90'	40	24	84	51	160	98	320	195	490	299	930	567
100'	38	23	79	48	150	92	305	186	460	281	870	531
125'	34	21	72	44	130	79	275	168	410	250	780	476
150'	31	19	64	39	120	73	250	153	380	232	710	433
175'	28	17	59	36	110	67	225	137	350	214	650	397
200'	26	16	55	34	100	61	210	128	320	195	610	372

NOTE: When sizing supply lines, consider possibilities of future expansion and increased heating requirements. Refer to National Fuel Gas Code for additional information on sizing.

PRESSURE DROP TABLES

MODEL SERIES X, RP, EEDU, SC AND HRPD

These tables use ANSI Z83.9-1986 formula for determining CFM and temperature rise.

The formula used in these calculations is: CFM = $\dfrac{\text{Output of Heater}}{\text{Temperature Rise x 1.08}}$

Pressure drop measurements are shown in inches of w.c. The Temperature Rise range listed on each chart is the approved range for installing that standard model in the United States. Unless noted otherwise, approved temperature range for a Canadian installation is the same.

MODEL X/RP

Size	75		100		125		150		175		200		225		250		300		350		400	
Temp. Rise	CFM	P.D.	CFM	P.D.	CFM	P.D.	CFM	P.D.	CFM	P.D.	CFM	P.D.	CFM	P.D.	CFM	P.D.	CFM	P.D.	CFM	P.D.	CFM	P.D.
50°F	1105	0.23	1475	0.43	1840	0.50	2210	0.38	2580	0.52	2945	0.42	3315	0.53	3685	0.40	4420	0.58	5160	0.65	5895	0.67
60°F	920	0.15	1225	0.29	1535	0.33	1840	0.26	2150	0.35	2455	0.28	2765	0.36	3070	0.28	3685	0.39	4300	0.44	4915	0.45
70°F	790	0.10	1050	0.21	1315	0.25	1580	0.19	1840	0.26	2105	0.22	2370	0.27	2630	0.23	3160	0.29	3685	0.31	4210	0.32
80°F	690	0.06	920	0.15	1150	0.21	1380	0.15	1610	0.19	1840	0.17	2070	0.22	2300	0.22	2765	0.25	3225	0.25	3685	0.25
90°F	610	0.04	815	0.11	1020	0.18	1225	0.12	1430	0.16	1635	0.14	1840	0.17	2045	0.21	2455	0.22	2865	0.23	3275	0.19

MODEL X/RP (WITH FINGER-BAFFLES REMOVED)

Size	75		100		125		150		175		200		225		250		300		350		400	
Temp. Rise	CFM	P.D.	CFM	P.D.	CFM	P.D.	CFM	P.D.	CFM	P.D.	CFM	P.D.	CFM	P.D.	CFM	P.D.	CFM	P.D.	CFM	P.D.	CFM	P.D.
20°F	2765	0.62	3685	1.08	4605	1.16	5530	0.85	6450	1.19	7370	1.00	8295	1.28	9215	0.90	11060	1.26	12900	1.23	14745	1.23
30°F	1840	0.28	2455	0.5	3070	0.53	3685	0.39	4300	0.54	4915	0.45	5530	0.58	6140	0.41	7370	0.57	8600	0.56	9830	0.56
40°F	1380	0.16	1840	0.28	2300	0.28	2765	0.21	3225	0.29	3685	0.25	4145	0.31	4605	0.22	5530	0.32	6450	0.31	7370	0.31
50°F	1105	0.12	1475	0.16	1840	0.21	2210	0.15	2580	0.18	2945	0.16	3315	0.21	3685	0.15	4420	0.21	5160	0.19	5895	0.19
60°F	920	0.10	1225	0.14	1535	0.15	1840	0.12	2150	0.15	2455	0.12	2765	0.15	3070	0.11	3685	0.15	4300	0.14	4915	0.15
75°F	735	0.10	980	0.12	1225	0.12	1475	0.11	1720	0.12	1965	0.11	2210	0.12	2455	0.08	2945	0.11	3440	0.11	3930	0.11

MODEL EEDU

Size	75		100		125		140		170		200		225		250		300		350		400	
Temp. Rise	CFM	P.D.	CFM	P.D.	CFM	P.D.	CFM	P.D.	CFM	P.D.	CFM	P.D.	CFM	P.D.	CFM	P.D.	CFM	P.D.	CFM	P.D.	CFM	P.D.
50°F	1105	0.24	1475	0.43	1840	0.49	2065	0.65	2505	0.67	2945	0.67	3315	0.69	3685	0.67	4420	0.70	5160	0.75	5895	0.77
60°F	920	0.16	1225	0.30	1535	0.33	1720	0.43	2085	0.46	2455	0.46	2765	0.47	3070	0.45	3685	0.47	4300	0.52	4915	0.52
70°F	790	0.10	1050	0.21	1315	0.25	1475	0.32	1790	0.33	2105	0.35	2370	0.36	2630	0.34	3160	0.35	3685	0.38	4210	0.38
80°F	695	0.07	920	0.16	1150	0.20	1290	0.24	1565	0.25	1840	0.26	2070	0.27	2300	0.26	2765	0.27	3225	0.28	3685	0.28
90°F	615	0.05	815	0.12	1020	0.17	1145	0.20	1390	0.19	1635	0.20	1840	0.21	2045	0.20	2455	0.22	2865	0.23	3275	0.22

PRESSURE DROP TABLES continued

MODEL EEDU (WITH FINGER-BAFFLES REMOVED)

Size	75		100		125		140		170		200		225		250		300		350		400	
Temp. Rise	CFM	P.D.	CFM	P.D.	CFM	P.D.	CFM	P.D.	CFM	P.D.	CFM	P.D.	CFM	P.D.	CFM	P.D.	CFM	P.D.	CFM	P.D.	CFM	P.D.
20°F	2765	0.60	3685	1.09	4605	1.14	5160	1.50	6265	1.64	7370	1.64	8295	1.69	9215	1.67	11060	1.64	12900	1.64	14745	1.64
30°F	1840	0.28	2455	0.50	3070	0.52	3440	0.66	4175	0.73	4915	0.73	5530	0.75	6140	0.72	7370	0.73	8600	0.73	9830	0.73
40°F	1380	0.16	1840	0.28	2300	0.27	2580	0.36	3130	0.38	3685	0.39	4145	0.40	4605	0.40	5530	0.39	6450	0.40	7370	0.38
50°F	1105	0.12	1475	0.18	1840	0.18	2065	0.22	2505	0.24	2945	0.24	3315	0.26	3685	0.24	4420	0.24	5160	0.25	5895	0.24
60°F	920	0.10	1225	0.13	1535	0.14	1720	0.17	2085	0.17	2455	0.17	2765	0.18	3070	0.17	3685	0.17	4300	0.18	4915	0.17
65°F	850	0.08	1130	0.11	1415	0.12	1585	0.15	1925	0.14	2265	0.14	2552	0.15	2835	0.14	3400	0.14	3970	0.15	4535	0.15
70°F	-	-	-	-	-	-	-	-	1790	0.12	2105	0.12	2370	0.13	2630	0.11	3160	0.12	3685	0.13	4210	0.13

MODEL SC

Size	100		125		150		175		200		225		250		300		350		400	
Temp. Rise	CFM	P.D.	CFM	P.D.	CFM	P.D.	CFM	P.D.	CFM	P.D.	CFM	P.D.	CFM	P.D.	CFM	P.D.	CFM	P.D.	CFM	P.D.
50°F	1480	0.50	1850	0.50	2220	0.36	2590	0.52	2960	0.41	3330	0.53	3700	0.42	4440	0.58	5185	0.67	5925	0.67
55°F	1345	0.34	1680	0.41	2020	0.30	2355	0.43	2690	0.34	3030	0.44	3365	0.35	4040	0.48	4710	0.55	5385	0.55
60°F	1235	0.29	1540	0.34	1850	0.26	2160	0.36	2465	0.28	2775	0.37	3085	0.30	3700	0.40	4320	0.46	4935	0.46
70°F	1055	0.21	1320	0.25	1585	0.19	1850	0.26	2115	0.21	2380	0.27	2645	0.22	3175	0.30	3700	0.34	4230	0.34
80°F	925	0.16	1155	0.19	1385	0.14	1620	0.20	1850	0.17	2080	0.21	2315	0.20	2775	0.23	3240	0.26	3700	0.26
85°F	870	0.14	1085	0.18	1305	0.13	1525	0.18	1740	0.15	1960	0.19	2175	0.20	2610	0.22	3050	0.23	3485	0.23
90°F	820	0.12	1025	0.16	1235	0.12	1440	0.16	1645	0.13	1850	0.17	2055	0.18	2465	0.20	2880	0.21	3290	0.21

MODEL SC (WITH FINGER-BAFFLES REMOVED)

Size	100		125		150		175		200		225		250		300		350		400	
Temp. Rise	CFM	P.D.	CFM	P.D.	CFM	P.D.	CFM	P.D.	CFM	P.D.	CFM	P.D.	CFM	P.D.	CFM	P.D.	CFM	P.D.	CFM	P.D.
20°F	3700	1.08	4630	1.12	5555	0.85	6480	1.11	7405	1.02	8330	1.24	9255	0.90	11110	1.24	12960	1.24	14815	1.24
30°F	2465	0.48	3085	0.50	3700	0.38	4320	0.50	4935	0.45	5555	0.55	6170	0.40	7405	0.55	8640	0.55	9875	0.55
40°F	1850	0.27	2315	0.28	2775	0.21	3240	0.28	3700	0.25	4165	0.31	4630	0.22	5555	0.31	6480	0.31	7405	0.31
50°F	1480	0.17	1850	0.18	2220	0.14	2590	0.18	2960	0.16	3330	0.20	3700	0.14	4440	0.20	5185	0.20	5925	0.20
60°F	1230	0.13	1540	0.13	1850	0.11	2160	0.14	2465	0.12	2775	0.15	3085	0.11	3700	0.15	4320	0.15	4935	0.15
70°F	1055	0.10	1320	0.11	1585	0.10	1850	0.13	2115	0.10	2380	0.11	2645	0.09	3170	0.11	3700	0.11	4230	0.11
75°F	985	0.09	1230	0.10	1480	0.09	1725	0.11	1975	0.09	2220	0.10	2465	0.08	2960	0.10	3455	0.10	3950	0.10

MODEL HRPD

Size	250		300		350		400		500		600		700		800	
Temp. Rise	CFM	P.D.	CFM	P.D.	CFM	P.D.	CFM	P.D.	CFM	P.D.	CFM	P.D.	CFM	P.D.	CFM	P.D.
40°F	4630	1.97	5556	1.45	6481	2.02	7407	1.70	9259	1.53	11111	2.14	12963	2.09	14815	2.09
50°F	3704	1.26	4444	0.92	5185	1.29	5926	1.09	7407	0.98	8889	1.37	10370	1.34	11852	1.34
60°F	3086	0.88	3704	0.64	4321	0.90	4938	0.76	6173	0.68	7407	0.95	8642	0.93	9877	0.93
70°F	2646	0.64	3175	0.47	3704	0.66	4233	0.56	5291	0.50	6349	0.70	7407	0.68	8466	0.68
80°F	2315	0.49	2778	0.36	3241	0.51	3704	0.43	4630	0.38	5556	0.54	6481	0.52	7407	0.52
90°F	2058	0.39	2469	0.29	2881	0.40	3292	0.34	4115	0.30	4938	0.42	5761	0.41	6584	0.41
100°F	1852	0.32	2222	0.23	2593	0.32	2963	0.27	3704	0.24	4444	0.34	5185	0.33	5926	0.33

INSTALLATION REQUIREMENTS

DUCT FURNACES

WARNING: Gas-fired appliances are not designed for use in hazardous atmospheres containing flammable vapors or combustible dust, or atmospheres containing chlorinated or halogenated hydrocarbons.

Installations in public garages or airplane hangars are permitted when in accordance with ANSI Z223.1 and NFPA 54 codes or CAN1-B149 and enforcing authorities.

WARNING: Failure to provide proper venting could result in death, serious injury, and/or property damage. Unit must be connected to flue having sufficient draft to ensure safe and proper operation. Unit must be properly vented to the outside of the building. Safe operation of any gravity vented heating equipment requires a properly operating vent system, correct provision for combustion air and regular maintenance and inspection.

WARNING: Improper installation, adjustment, alteration, service or maintenance can cause property damage, injury, or death. Read the installation operation and maintenance instructions thoroughly before installing or servicing any heating equipment.

FOR YOUR SAFETY

If you smell gas:

1. Open windows.
2. Don't touch electrical switches.
3. Extinguish any open flame.
4. Immediately call your gas supplier.

FOR YOUR SAFETY

WARNING: The use and storage of gasoline or other flammable vapors and liquids in the vicinity of this appliance is hazardous.

DANGER: The gas burner in all Reznor gas-fired equipment is designed and equipped to provide **complete combustion**. However, **if the installation** does not permit the burner to receive the proper supply of combustion air, complete combustion may not occur. The result is **incomplete combustion** which produces carbon monoxide, a poisonous gas that can cause death. **Safe operation of indirect-fired gas burning equipment requires a properly operating vent system which vents all flue products to the outside atmosphere.** Failure to provide proper venting will result in a health hazard which could cause serious personal injury or death.

Always comply with the combustion air requirements in the installation codes and instructions. Combustion air at the burner should be regulated only by manufacturer-provided equipment. NEVER RESTRICT OR OTHERWISE ALTER THE SUPPLY OF COMBUSTION AIR TO ANY HEATER. Indoor units installed in a confined space must be supplied with air for combustion as required by code and in the installation manual. INSTALL AND MAINTAIN THE VENT SYSTEM TO CONTINUALLY VENT ALL FLUE PRODUCTS SAFELY TO THE OUTSIDE ATMOSPHERE.

CODE REQUIREMENTS

The unit shall be installed by a qualified agency in accordance with the standards of the National Fire Protection Association and the national Fuel Gas Code for gas-fired duct furnaces. These standards should be followed carefully. Authorities having jurisdiction should be consulted prior to installation to verify local codes. The unit shall be installed in accordance with the National Fuel Gas Code ANSI Z223.1 (latest edition).

In Canada, the installation of these appliances is to be in accordance with CAN/C.G.A.-B149.1 and B149.2, Installation Code for Gas Burning Appliances and Equipment, and local codes. Appliances with less than 80% thermal efficiency not approved for installation in Canada after April 29, 2005.

Installation in aircraft hangars should be made in accordance with ANSI/NFPA No. 409 (latest edition), standard for aircraft hangars, and in public garages in accordance with NFPA No. 88A (latest edition), standard for parking structures, and NFPA No. 88B for repair garages. In Canada, installation in aircraft hangars should be in accordance with the requirements of the enforcing authorities and in public garages in accordance with CAN1-B149 codes.

REZNOR®

INSTALLATION REQUIREMENTS continued

DUCT FURNACES continued

CONDENSATION

When air inlet temperatures are below 40°F or temperature rise is less than 40°F, condensation on the heat exchanger is possible. The resulting steel corrosion will shorten the heat exchanger life expectancy. Use E-3 (409) stainless steel for heat exchanger material to inhibit corrosion.

If there is a possibility of condensation of flue products, E-3 (409) stainless steel should be used for burner material.

CHLORINE

The presence of chlorine vapors in the combustion air of gas-fired heating equipment presents a potential corrosive hazard. Chlorine will, when exposed to flame, precipitate from the compound, usually Freon or degreaser vapors, and into solution with any condensation that is present in the heat exchanger or associated parts. The result is hydrochloric acid which readily attacks all metals including 300 grade stainless steel. Care should be taken to separate these vapors from the combustion process. This may be done by wise location of units with regard to exhausters or prevailing wind directions. Remember, chlorine is heavier than air. This fact should be kept in mind when determining installation locations of heaters and building exhaust systems.

CLEARANCE AND COMBUSTION AIR

Units must be installed so that clearances are provided for combustion air space, service and inspection, and for proper spacing from combustible construction.

All fuel-burning equipment must be supplied with the air that enters into the combustion process and is then vented to the outdoors. Sufficient air must enter the equipment location to replace that exhausted through the vent system. Modern construction methods involve the greater use of insulation, improved vapor barriers and weather-stripping, with the result that buildings generally are much tighter structurally that they have been in the past. Combustion air supply for gas-fired equipment can be affected by these construction conditions because infiltration that would have existed in the past may not be adequate. Extensive use of exhaust fans aggravates the situation. In the past, the infiltration of outside air assumed in heat loss calculations (one air change per hour) was assumed to be sufficient. However, current construction methods using more insulation and vapor barriers, tighter fitting and gasketed doors and windows or weather-stripping, and mechanical exhaust fans may now require the introduction of outside air through wall openings or ducts.

HEATERS LOCATED IN CONFINED SPACES

Do not install unit in confined space without providing wall openings leading to and from this space. Provide adequate openings near floor and ceiling for ventilation and air for combustion, as shown above, depending on combustion air source as noted below.

Add total BTUH of all appliances in the confined space and divide by figures below for square inch free area size of each (top and bottom) opening.

Confined Space
A space whose volume is less than 50 cubic feet per 1000 BTUH (1.5 cubic meters per kW) of the installed appliance input rating.

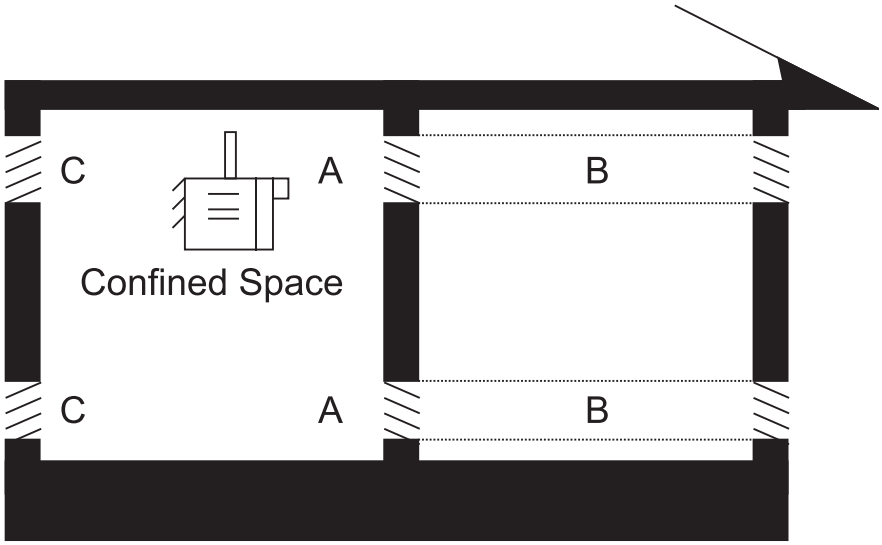

REZNOR®

INSTALLATION REQUIREMENTS continued

DUCT FURNACES continued

HEATERS LOCATED IN CONFINED SPACES continued

1. Air from inside building - openings 1 square inch free area per 1,000 BTUH. Never less than 100 square inches free area for each opening. See “A” in illustration.
2. Air from outside through duct - openings 1 square inch free area per 2,000 BTUH. See “B” in illustration.
3. Air direct from outside - openings 1 square inch free area per 4,000 BTUH. See “C” in illustration.

NOTE:
For further details on supplying combustion air to confined space see: National Fuel Gas Code ANSI Z223.1 - (latest edition) 5.3.3.

GAS PIPING AND PRESSURES

To provide adequate gas pressure at the furnace, refer to pipe sizing tables. The unit is equipped for a maximum gas supply pressure of 1/2 pound or 8 ounces. An additional service regulator external to the unit is required to reduce higher supply pressures to the 1/2 pound maximum.

WARNING: Never expose gas control on unit to greater than 1/2 pound pressure! Pressure testing of the gas supply piping system must be carried out before connecting the furnace. A pipe cap or field-supplied high pressure gas cock must be used during proof testing of the system.

For Natural Gas
Manifold pressure is regulated by the combination valve to 3.5” water column. Line pressure upstream of the controls must be a minimum of 5” water column or as noted on unit rating plate.

For Propane Gas
Manifold pressure is regulated by the combination valve to 10” water column. Line pressure upstream of controls must be 11” water column minimum and 14” maximum.

NOTE:
Gas supply pressures higher than 14” w.c. or 1/2 pound require an additional service regulator to be added to the unit or supply system.

All piping must be in accordance with requirements outlined in the National Fuel Gas Code ANSI Z223.1-(latest edition) or CAN/C.G.A.-B149 (.1 or .2).

When regulations require and for ease of servicing, install a ground joint union and manual shut-off valve upstream of unit control system.

WARNING: All components of gas supply system must be leak tested prior to placing equipment in service. NEVER TEST FOR LEAKS WITH AN OPEN FLAME.

SIZING BY-PASS AIR DUCT

DIRECTIONS FOR SIZING BY-PASS DUCT

1. From the Pressure Drop Tables on pages 29 and 30, find the pressure drop for the Model and Size of unit that is being installed and the allowable CFM.
   Example: EEDU 125 @ 70° temperature rise
   P.D. .25
   CFM 1315
2. Subtract the allowable CFM from the actual CFM of the installation to determine how much air must go through the by-pass duct.
   Example: Blower CFM 3000
   Allowable CFM -1315
   By-Pass CFM 1685
3. Go to the column in the By-Pass CFM Chart that is closest to the pressure drop. Move down in that column until you find the CFM closest to the answer in Step 2.
   Example: P.D. .25
   By-Pass CFM 1650
4. Move to the left column to find out the required size of the by-pass duct.
   Example: By-Pass Duct
   Size is 6”

Depth of the by-pass duct is 18” on both inlet and outlet ends. By-pass duct must be located on side opposite limit control and 2” from the heat exchanger side panel.

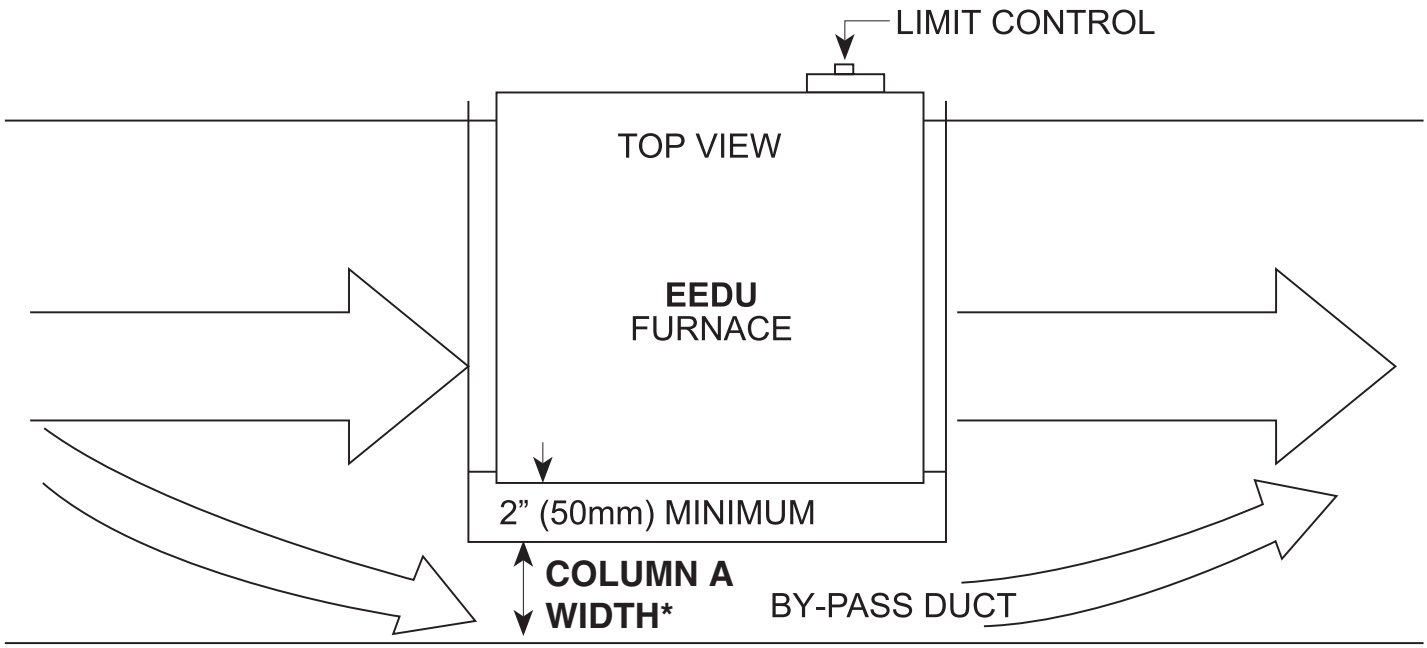

SIZING BY-PASS AIR DUCT continued

DIRECTIONS FOR SIZING BY-PASS DUCT continued

BY-PASS CFM									
Column A Width*	Pressure Drop Through Heaters								
	0.10	0.15	0.20	0.25	0.30	0.35	0.40	0.45	0.50
3”	490	530	610	700	780	830	900	960	1010
4”	630	750	870	980	1090	1160	1250	1310	1400
5”	850	1010	1190	1300	1410	1520	1640	1730	1810
6”	1050	1290	1480	1650	1800	1940	2090	2200	2320
7”	1250	1510	1760	1960	2180	2320	2500	2650	2800
8”	1490	1810	2100	2350	2560	2760	2940	3110	3920
9”	1700	2100	2400	2700	2970	3200	3400	3600	3800
10”	1920	2380	2760	3090	3650	4020	4300	4550	4800

*Depth of by-pass duct is 18” on both inlet and outlet ends. NOTE: By-pass must be located on side opposite limit control and 2” from side panel.

NOTE:
Not all capabilities are covered in this chart. If your installation is not covered, the correct size may be determined by consulting your factory representative.

SAMPLE SPECIFICATIONS

MODEL EEDU

ENERGY EFFICIENT, POWER-VENTED INDOOR DUCT FURNACES

Provide 80% thermal-efficient, indoor, gas-fired duct heaters as manufactured as Reznor® heating equipment. They shall be designed for a fuel use improvement of 25% through the use of a factory-installed power-venter, sealed vent product collection chamber, and an intermittent spark-ignited pilot as standard equipment.

Each EEDU Series unit shall be equipped for use with (natural) (propane) gas and (120/1) (208/1) (230/1) volt power supply. The heat exchanger shall be the Reznor Thermocore® design of (aluminized) (E-3 [409] stainless) steel. Die-formed burners shall be of (aluminized) (E-3 [409] stainless) steel and include flared ports (burner air shutters) and a stainless steel insert.

These units are to include a 24-volt control transformer, a (single-stage) (two-stage) (two-stage with unit-mounted ductstat) (two-stage with ductstat with remote temperature selector) (electronic modulation with ductstat) (electronic modulation with ductstat and remote set-point adjustment) gas control system with a regulated combination redundant gas valve, and an intermittent spark pilot with electronic flame supervision (and timed lockout). The unit is to include all limit and safety controls, including a combustion air pressure switch to verify proper vent flow before allowing operation of the gas valve.

All units must bear a C.S.A. label. The manufacturer of this equipment must have at least forty (40) years experience with gas-fired duct furnaces.

MODEL SC

SEPARATED COMBUSTION, INDOOR DUCT FURNACES

Provide 80% thermal-efficient, separated combustion, gas-fired duct furnaces as manufactured as Reznor heating equipment. They are to be designed for a fuel use improvement of 25% and engineered for use in building areas with negative pressure and/or extremely dirty or mildly corrosive atmospheres. The use of a factory-installed power venter to draw combustion air from outside is to prevent dirt, lint, dust, or other contaminants present in the heated space from entering the unit. The combustion air supply pipe and flue exhaust pipe shall be run in parallel to a factory-supplied (horizontal) (vertical) vent terminal assembly. The vent terminal/combustion air inlet assembly shall be arranged to allow a single wall or roof penetration.

Each SC Series unit shall be equipped for use with (natural) (propane) gas and (120/1) (208/1) (480/1) volt power supply. The heat exchanger shall be the Reznor Thermocore design of (aluminized) (E-3 [409] stainless) steel and include flared ports (burner air shutters) and a stainless steel insert.

The SC Series shall be provided with 24-volt control transformer, a(n) (single-stage) (two-stage with unit-mounted ductstat) (two-stage with ductstat with remote temperature selector) (electronic modulation - 50%-100% firing rate with ductstat) (electronic modulation - 50%-100% firing rate with ductstat and remote set-point adjustment) (electronic modulation - 50%-100% firing rate, with conditioner for connection to field-supplied computer) (electronic modulation - 20/28%-100% firing rate) (electronic modulation - 20/28%-100% firing rate with conditioner for connection to field-supplied computer) gas control system with a regulated combination redundant gas valve and an intermittent spark pilot with electronic flame supervision (and timed lockout). The SC is to include all limit and safety controls, including a combustion air pressure differential switch to verify proper vent flow before allowing operation of the gas valve.

All gas-fired unit heaters must bear a C.S.A. label. The manufacturer must have a minimum of forty (40) years experience with separated combustion heating.

MODEL X

INDOOR, GRAVITY-VENTED DUCT FURNACES

Provide 80% thermal-efficient, gas-fired, indoor, gravity-vented duct furnaces as Reznor heating equipment. Model X Series shall be equipped for use with (natural) (propane) gas and (120/1) 208/1) (460/1) voltage/phase power supply. The heat exchanger shall be the Reznor Thermocore design of (aluminized) (E-3 [409] stainless) steel with (aluminized) (E-3 [409] stainless) steel drip pan. Die-formed burners shall be constructed of (aluminized) (E-3 [409] stainless) steel and include flared ports (burner air shutters) and a stainless steel insert.

The unit is to include a 24-volt control transformer, a(n) (single-stage) (two-stage) (two-stage with unit-mounted ductstat) (two-stage with ductstat with remote temperature selector) (electronic modulation) (electronic modulation with ductstat) (electronic modulation with ductstat and remote set-point) gas control system with a regulated combustion redundant gas valve and a (intermittent spark pilot with electronic flame supervision) (intermittent spark pilot with electronic flame supervision and timed lockout). The unit is to include all required limit and safety controls, including a blocked vent shut-off system.

All units must bear a C.S.A. label. The manufacturer of this equipment must have at least forty (40) years experience with gas-fired duct furnaces.

SAMPLE SPECIFICATIONS continued

MODEL RP

OUTDOOR, POWER-VENTED DUCT FURNACES

Provide 80% thermal-efficient, gas-fired, outdoor, power-vented duct furnaces as manufactured as Reznor® heating equipment. Model RP Series unit shall be equipped for use with (natural) (propane) gas and (120/1) (208/1) (230/1) (460/1) voltage/phase power supply. The heat exchanger shall be the Reznor Thermocore® design of (aluminized) (E-3 [409] stainless) steel with (aluminized) (E-3 [409] stainless) steel drip pan. Die-formed burners shall be constructed of (aluminized) (E-3 [409] stainless) steel and include flared ports (burner air shutters) and a stainless steel insert. The units must be equipped for outdoor application with a weatherproof cabinet and are to be provided with a factory-installed power venter with side-mounted flue discharge.

The unit is to include a 24-volt control transformer, a(n) (single-stage) (two-stage) (two-stage with unit-mounted ductstat) (two-stage with ductstat with remote temperature selector) (electronic modulation) (electronic modulation - 50%-100% firing rate with ductstat) (electronic modulation - 50%-100% firing rate with ductstat and remote set-point adjustment) (electronic modulation - 50%-100% firing rate, with conditioner for connection to field-supplied computer) (electronic modulation - 20/28%-100% firing rate) (electronic modulation - 20/28%-100% firing rate with conditioner for connection to field-supplied computer) gas control system with a regulated combustion redundant gas valve and an intermittent spark pilot with electronic flame supervision (and timed lockout). The unit is to include all required limit and safety controls.

All units must bear a C.S.A. label. The manufacturer of this equipment must have at least forty (40) years experience with gas-fired duct furnaces.

MODEL HRPD

OUTDOOR, POWER-VENTED, DUAL DUCT FURNACES IN SERIES ON RAILS

Provide 80% thermal-efficient, gas-fired, outdoor, power-vented dual duct furnaces as manufactured as Reznor heating equipment. Model HRPD Series unit shall be equipped for use with (natural) (propane) gas and (120/1) (208/1) (230/1) (460/1) voltage/phase power supply. The heat exchanger shall be the Reznor Thermocore design of (aluminized) (E-3 [409] stainless) steel with (aluminized) (409 stainless) steel drip pan. Die-formed burners shall be constructed of (aluminized) (409 stainless) steel and include flared ports (burner air shutters) and a stainless steel insert. The unit must be equipped for outdoor application with a weatherproof cabinet and each furnace must be provided with a factory-installed power venter with side-mounted flue discharge.

The unit is to include a 24-volt control transformer. Unit is to be arranged for (recirculation heating with a(n) [single-stage] [two-stage] [electronic modulation] [electronic - modulation 50%-100% tandem operation from room thermostat – shipped separately] gas controls) (makeup air operation with a(n) [two-stage with each unit with single-stage gas valve and the other with a two stage mounted ductstat – 50% to 100%] [four-stage with 2-stage gas valves controlled from 2-stage ductstats with either unit-mounted controls or remote electronic controls with or without display module] [4:1 turndown electronic modulation, (25% of full output) with duct probe (55-90°F) with unit setpoint, with remote adjustment, or with signal conditioner for customer-provided computer control] [8:1 turndown electronic modulation (12% of full fire output) {20-100% firing rate on first furnace controlled from ductstat with remote adjustment and 2-stage with outside air thermostat on second furnace} {8:1 turndown capability with signal conditioner for customer-provided computer control}] gas controls) The unit is to include all required limit and safety controls.

All units must bear a C.S.A. label. The manufacturer of this equipment must have at least forty (40) years experience with gas-fired duct furnaces.

NOTES

NOTES

CGA 2.6

ANSI Z83.8

For more information on Reznor® HVAC Equipment, contact your local Reznor Representative by calling 800-695-1901.

Or, find us on the internet at ReznorHVAC.com

Specifications & illustrations subject to change without notice or incurring obligations.

Reznor®, Venturion® and Thermocore® are registered trademarks of Nortek Global HVAC, LLC.

All other trademarks are the property of their respective owners.

© Nortek Global HVAC, LLC 2022. All Rights Reserved.

PRINTED IN U.S.A.

784F-0322 (Replaces C-DH-0514)

REZNOR®