REZNOR®

**Revision: UEAS-IOM (05-26) 221232-A**

Supersedes: I-UEAS (11-18) PN221232R19

# GAS-FIRED UNIT HEATER INSTALLATION, OPERATION, AND MAINTENANCE

## DISCONTINUED MODEL UEAS

## ⚠ DANGER ⚠

**FIRE OR EXPLOSION HAZARD**

- **Failure to follow safety warnings exactly could result in serious injury, death, or property damage.**
- **Improper installation, adjustment, alteration, service, or maintenance can cause serious injury, death, or property damage.**
- **Installation and service must be performed by a qualified installer, service agency, or the gas supplier.**
- **Be sure to read and understand the installation, operation, and service instructions in this manual.**
- **Do not store or use gasoline or other flammable vapors and liquids in the vicinity of this or any other appliance.**

**WHAT TO DO IF YOU SMELL GAS**

- **Do not try to light any appliance.**
- **Do not touch any electrical switch; do not use any phone in your building.**
- **Leave the building immediately.**
- **Immediately call your gas supplier from a phone remote from the building. Follow the gas supplier's instructions.**
- **If you cannot reach your gas supplier, call the fire department.**

**DO NOT DESTROY. PLEASE READ CAREFULLY. KEEP IN A SAFE PLACE FOR FUTURE REFERENCE.**

# Table of Contents


**1.0 General ..... 2**
- 1.1 Hazard Labels and Notices ..... 2
- 1.2 General Information ..... 3
- 1.3 Warranty ..... 3
- 1.4 Installation Codes ..... 3

**2.0 Unit Heater Location ..... 4**

**3.0 Receiving, Uncrating, and Preparing for Installation ..... 5**

**4.0 Dimensions and Clearances ..... 6**
- 4.1 Dimensions ..... 6
- 4.2 Clearances ..... 7

**5.0 High-Altitude Operation ..... 7**

**6.0 Hanging the Heater ..... 7**

**7.0 Mechanical ..... 8**
- 7.1 Gas Piping and Pressure ..... 8
- 7.2 Venting and Combustion Air ..... 12
- 7.3 Condensate Drain System ..... 25

**8.0 Electrical and Wiring ..... 26**
- 8.1 Electrical Supply ..... 26
- 8.2 24V Control Wiring Connections ..... 27
- 8.3 Typical Wiring Diagram ..... 28

**9.0 Controls ..... 29**
- 9.1 Thermostat ..... 29
- 9.2 Gas Valve ..... 29
- 9.3 Safety Controls ..... 29

**10.0 Ignition System ..... 30**

**11.0 Commissioning and Startup ..... 33**
- 11.1 Check the Installation Prior to Startup ..... 33
- 11.2 Heater Startup ..... 33
- 11.3 Check Installation After Startup ..... 34

**12.0 Maintenance and Service ..... 35**
- 12.1 Maintenance Schedule ..... 35
- 12.2 Maintenance Procedures ..... 35
- 12.3 Troubleshooting ..... 40

**APPENDIX ..... 42**

**INDEX ..... 43**

**INSTALLATION RECORD ..... 44**


## 1.0 General

### 1.1 Hazard Labels and Notices

There are warning labels on the unit and throughout this manual. For your safety, read the definitions below and comply with all boxes labeled **CAUTION, WARNING,** and **DANGER** during installation, operation, maintenance and service of this heater.

#### Definitions of Hazard Intensity Levels in this Manual

**HAZARD INTENSITY LEVELS**

1. **DANGER: Failure to comply will result in severe personal injury or death and/or property damage.**
2. **WARNING: Failure to comply could result in severe personal injury or death and/or property damage.**
3. **CAUTION: Failure to comply could result in minor personal injury and/or property damage.**

**WARNING**

**Gas-fired appliances are not designed for use in hazardous atmospheres containing flammable vapors or combustible dust, in atmospheres containing chlorinated or halogenated hydrocarbons, or in applications with airborne silicone substances. See Hazard Levels above.**

**WARNING**

**Should overheating occur, or the gas supply fail to shut off, shut off the manual gas valve to the appliance before shutting off the electrical supply.**

**WARNING**

**Do not use this appliance if any part has been under water. Immediately call a qualified service technician to inspect the appliance and replace any gas control that has been under water.**

**WARNING**

**Installation should be done by a qualified agency in accordance with these instructions. The qualified service agency installing this high efficiency separated-combustion system is responsible for the installation.**

## 1.2 General Information

These high-efficiency unit heaters are design-certified by ITS for use in industrial and commercial installations in the United States and Canada. Instructions in this manual apply only to Model UEAS heaters.

Model UEAS heaters are available for use with either natural or propane gas. The type of gas, the input rate, and the electrical supply requirement are shown on the heater rating plate. Check the rating plate to determine if the heater is appropriate for the intended installation. **NOTE**: All Model UEAS heaters are factory-equipped for use with natural gas and include a conversion kit for field-conversion for use with propane.

Model UEAS heaters have a titanium stabilized primary heat exchanger with a MacroChannel® secondary heat exchanger.

**CAUTION**

**Model UEAS unit heaters should not be used in an application where the heated space temperature is below 50°F. The combination of low space and combustion air temperatures may result in condensate freezing in the secondary heat exchanger and/or condensate drain.**

## 1.3 Warranty

Refer to the limited warranty information on the Warranty Form shipped with the heater.

**Warranty is void if ...**

a. Wiring is not in accordance with the diagram furnished with the heater.
b. The unit is installed without proper clearance to combustible materials.
c. A fan model is connected to a duct system or if the air delivery system is modified.

## 1.4 Installation Codes

These units must be installed in accordance with local building codes. In the absence of local codes, in the United States, the unit must be installed in accordance with the National Fuel Gas Code, ANSI Z223.1 NFPA 54. A Canadian installation must be in accordance with the CSA B149 Installation Codes. These codes are available from CSA Information Services, 1-800-463-6727. Local authorities having jurisdiction should be consulted before installation is made to verify local codes and installation procedure requirements.

# 1.0 General (Continued)

## 1.4 Installation Codes (Continued)

### Special Installations (Aircraft Hangars/Repair Garages/Parking Garages)

Installations in aircraft hangars should be in accordance with ANSI/NFPA No. 409 (latest edition), Standard for Aircraft Hangars; in public garages in accordance with ANSI/NFPA No. 88A (latest edition), Standard for Parking Structures; and for repair garages in accordance with ANSI/NFPA No. 88B (latest edition), Standard for Repair Garages. In Canada, installations in aircraft hangars should be in accordance with the requirements of the enforcing authorities, and in public garages in accordance with CSA B149 codes.

### Massachusetts Requirement

If the heater is being installed in the Commonwealth of Massachusetts, this unit must be installed by a licensed plumber or licensed gas fitter.

# 2.0 Unit Heater Location

Use the throw data and location information in this section; clearances and dimensions in Paragraph 4; weights and hanging instructions in Paragraph 6; and piping, venting, and condensate drain requirements in Paragraph 7, to determine where to suspend the heater. Due to possible condensate freezing in the secondary heat exchanger and/or condensate drain, this heater should not be used in an application where the space temperature of the location is below 50°F.

### Heater Throw

### FIGURE 1. Throw for Fan

**NOTE:** Throws listed are with standard adjustable horizontal louvers at the angles listed (angle is relative to the top of the heater). Throw pattern changes with the addition of optional vertical louvers and/or downturn nozzles.

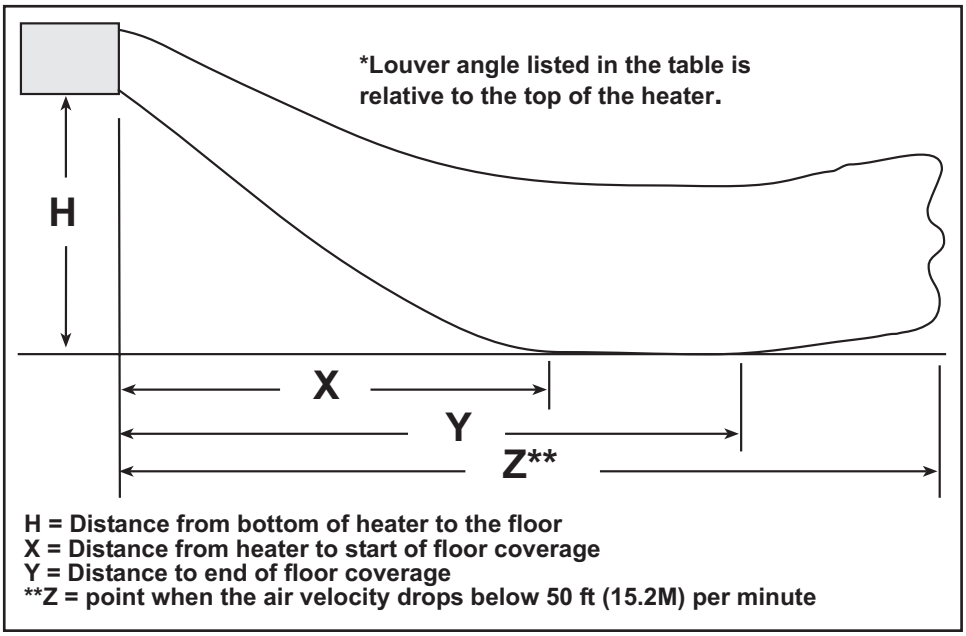


**Dimensions X, Y, and Z (Feet): Models with Standard Horizontal Louvers at Mounting Heights of 5–18 Feet**

| H | 130 | | | | 180 | | | | 260 | | | | 310 | | | |
|---|---|---|---|---|---|---|---|---|---|---|---|---|---|---|---|---|
| | X | Y | Z | Louver Angle* | X | Y | Z | Louver Angle* | X | Y | Z | Louver Angle* | X | Y | Z | Louver Angle* |
| 8 | 13 | 24 | 73 | −26° | 16 | 30 | 93 | −20° | 15 | 28 | 94 | −24° | 17 | 31 | 105 | −20° |
| 10 | 14 | 24 | 69 | −32° | 17 | 31 | 91 | −25° | 16 | 28 | 89 | −29° | 18 | 32 | 103 | −25° |
| 12 | 14 | 24 | 64 | −39° | 18 | 31 | 88 | −30° | 17 | 28 | 85 | −34° | 19 | 32 | 98 | −30° |
| 14 | 14 | 22 | 59 | −45° | 19 | 30 | 84 | −34° | 17 | 27 | 80 | −40° | 20 | 32 | 95 | −34° |
| 16 | 13 | 20 | 53 | −51° | 19 | 29 | 79 | −39° | 17 | 25 | 74 | −45° | 21 | 31 | 90 | −38° |
| 18 | 11 | 17 | 44 | −58° | 19 | 28 | 74 | −44° | 16 | 24 | 66 | −51° | 20 | 30 | 85 | −43° |

**Dimensions X, Y, and Z (Meters): Models with Standard Horizontal Louvers at Mounting Heights of 1.5–5.5 Meters**

| H | 130 | | | | 180 | | | | 260 | | | | 310 | | | |
|---|---|---|---|---|---|---|---|---|---|---|---|---|---|---|---|---|
| | X | Y | Z | Louver Angle* | X | Y | Z | Louver Angle* | X | Y | Z | Louver Angle* | X | Y | Z | Louver Angle* |
| 2.4 | 4 | 7 | 22 | −26° | 5 | 9 | 28 | −20° | 5 | 9 | 29 | −24° | 5 | 9 | 32 | −20° |
| 3.0 | 4 | 7 | 21 | −32° | 5 | 9 | 28 | −25° | 5 | 9 | 27 | −29° | 6 | 10 | 31 | −25° |
| 3.7 | 4 | 7 | 20 | −39° | 6 | 9 | 27 | −30° | 5 | 9 | 26 | −34° | 6 | 10 | 30 | −30° |
| 4.3 | 4 | 7 | 18 | −45° | 6 | 9 | 26 | −34° | 5 | 8 | 24 | −40° | 6 | 10 | 29 | −34° |
| 4.9 | 4 | 6 | 16 | −51° | 6 | 9 | 24 | −39° | 5 | 8 | 23 | −45° | 6 | 9 | 27 | −38° |
| 5.5 | 3 | 5 | 13 | −58° | 6 | 9 | 23 | −44° | 5 | 7 | 20 | −51° | 6 | 9 | 26 | −43° |

*Angle is relative to top of heater

## Location Recommendations

Locate the heater so that it is a minimum of five feet (1.5M) above the floor and in compliance with the clearances in Paragraph 4.2.

**WARNING**

**Internal heater surfaces that are accessible from outside the heater will cause burns if touched. Suspend the heater a minimum of 5 feet (1.5M) above the floor.**

For best results, the heater should be placed with certain rules in mind. In general, a unit should be located from 8–12 feet (2.4–3.7M) above the floor. Units should always be arranged to blow toward or along exposed wall surfaces, if possible. Where two or more units are installed in the same room, a general scheme of air circulation should be maintained for best results.

Suspended heaters are most effective when located as close to the working zone as possible, and this fact should be kept in mind when determining the mounting heights to be used. However, care should be exercised to avoid directing the discharged air directly on the room occupants.

Partitions, columns, counters, or other obstructions should be taken into consideration when locating the unit heater so that a minimum quantity of airflow will be deflected by such obstacles.

When units are located in the center of the space to be heated, the air should be discharged toward the exposed walls. In large areas, units should be located to discharge air along exposed walls with extra units provided to discharge air in toward the center of the area.

At those points where infiltration of cold air is excessive, such as at entrance doors and shipping doors, it is desirable to locate the unit so that it will discharge directly toward the source of cold air from a distance of 15–20 feet (4.6–6.1M).

**CAUTION: Do not locate the heater where it may be exposed to water spray, rain, or dripping water.**

## Hazards of Chlorine: applies to location of heater with regard to combustion air inlet

The presence of chlorine vapors in the combustion air of gas-fired heating equipment presents a potential corrosion hazard. Chlorine found usually in the form of Freon or degreaser vapors, when exposed to flame will precipitate from the compound, and go into solution with any condensation that is present in the heat exchanger or associated parts. The result is hydrochloric acid which readily attacks all metals including 300 grade stainless steel. Care should be taken to separate these vapors from the combustion process. This may be done by wise location of the unit vent and combustion air terminals with regard to exhausters or prevailing wind directions. Chlorine is heavier than air. Keep these facts in mind when determining installation location of the heater in relation to building exhaust systems.

# 3.0 Receiving, Uncrating, and Preparing for Installation

This unit was test operated and inspected at the factory prior to crating and was in operating condition. If the heater has incurred any damage in shipment, document the damage with the transporting agency and contact your authorized Distributor. If you are an authorized Distributor, follow the FOB freight policy procedures.

Check the rating plate for the gas specifications and electrical characteristics of the heater to be sure that they are compatible with the gas and electric supplies at the installation site. A conversion kit is included with the heater for converting for use with propane (refer to instructions in Paragraph 7.1.4).

Read this booklet and become familiar with the installation requirements of your particular heater. If you do not have knowledge of local requirements, check with the local gas company or any other local agencies who might have requirements concerning this installation.

Before beginning, make preparations for necessary supplies, tools, and manpower. Be sure that the vent/combustion air kit (either vertical option CC2 or horizontal option CC6) is at the job site.

## 3.0 Receiving, Uncrating, and Preparing for Installation (Continued)

If the installation includes optional vertical louvers, downturn nozzle, and/or a hanger kit, install these options before the heater is suspended. Instructions are in this form or in the option package; option packages are shipped separately.

Other shipped-separate items could include a thermostat bracket kit, a thermostat, and/or a thermostat guard. Be sure all options ordered are at the installation site.

**IMPORTANT: Shipping brackets are attached with cabinet screws. When removing shipping brackets, reinsert ALL screws into the cabinet.**

## 4.0 Dimensions and Clearances

### 4.1 Dimensions

**FIGURE 2. Dimensions**

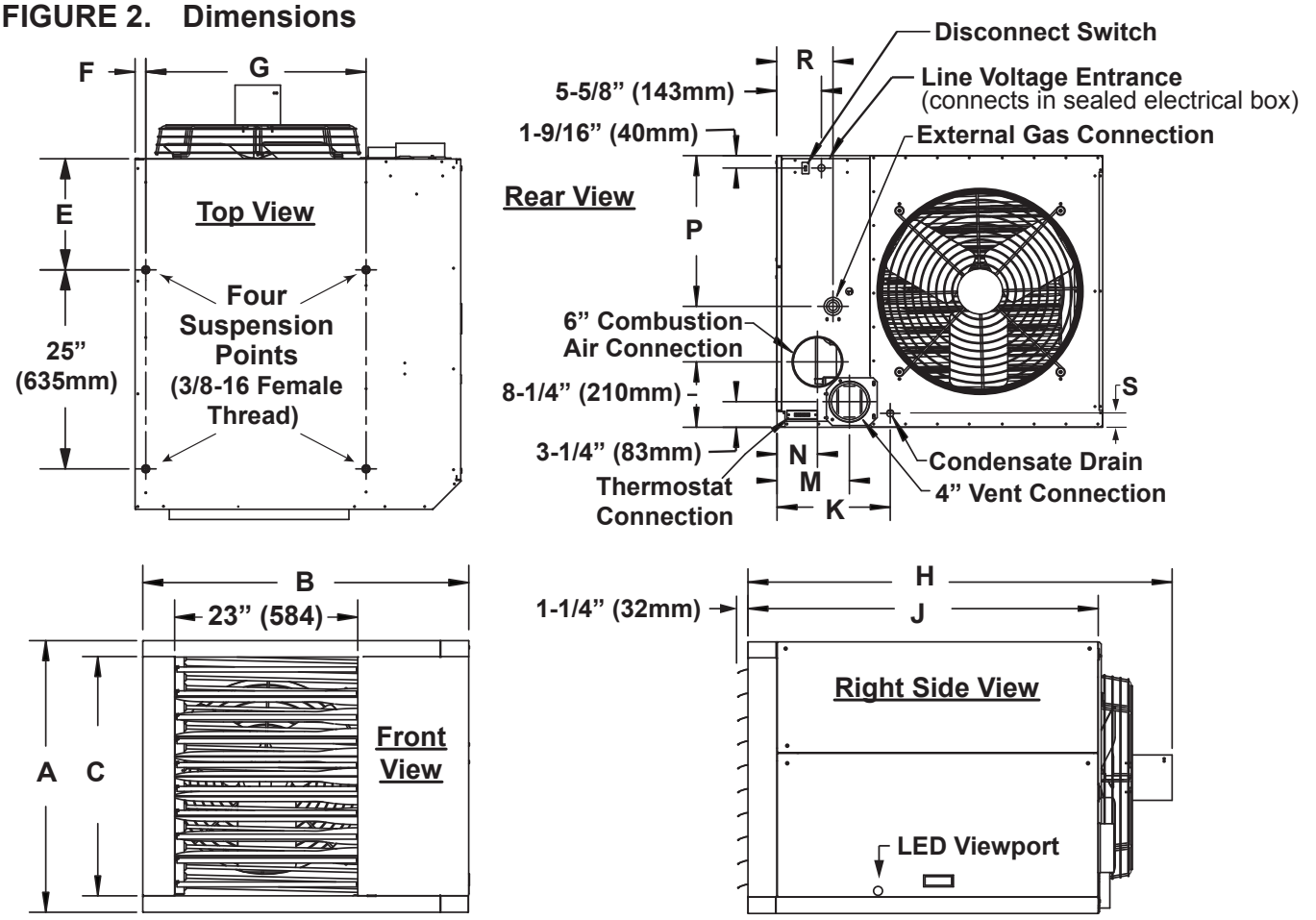


| Size | A | B | C | E | F | G | H | J | K | M | N | P | R | S |
|---|---|---|---|---|---|---|---|---|---|---|---|---|---|---|
| **Dimensions (Inches (±1/8))** | | | | | | | | | | | | | | |
| **130, 180** | 20-1/8 | 39-3/16 | 16-1/16 | 11-15/16 | 2-3/8 | 25-11/16 | 50-1/2 | 42 | 13-7/16 | 8-5/16 | 4-5/16 | 5-1/16 | 6-5/16 | 1-3/4 |
| **260, 310** | 34-1/8 | 40-15/16 | 30-1/16 | 13-15/16 | 1-3/8 | 27-11/16 | 53-5/16 | 44 | 14-7/32 | 9-3/32 | 5-1/16 | 18-15/16 | 7-3/4 | 1-3/8 |
| **Dimensions (mm (±3))** | | | | | | | | | | | | | | |
| **130, 180** | 511 | 995 | 408 | 303 | 60 | 652 | 1283 | 1067 | 341 | 211 | 110 | 129 | 160 | 44 |
| **260, 310** | 867 | 1039 | 764 | 354 | 35 | 703 | 1354 | 1118 | 361 | 231 | 129 | 481 | 197 | 35 |

**FIGURE 3. Dimension "T" with Optional Downturn Nozzle**

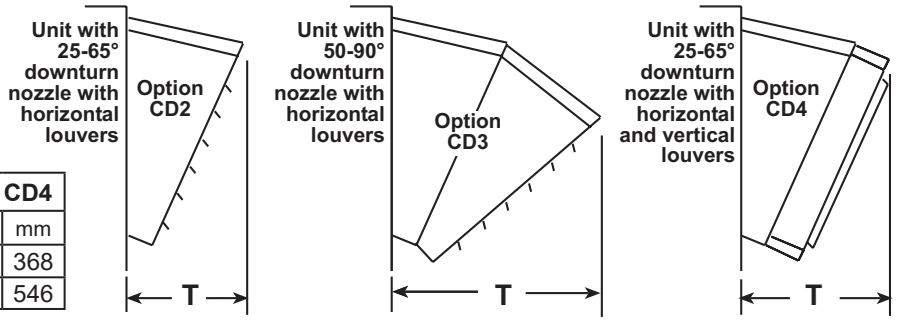


| "T" for Size | w/Opt CD2 | | w/Opt CD3 | | w/Opt CD4 | |
|---|---|---|---|---|---|---|
| | inches | mm | inches | mm | inches | mm |
| **130, 180** | 11-1/2 | 292 | 19-7/8 | 505 | 14-1/2 | 368 |
| **260, 310** | 18-1/2 | 470 | 32 | 813 | 21-1/2 | 546 |

## 4.2 Clearances

Units must be installed so that the clearances in the table are provided for combustion air space, inspection and service, and for proper spacing from combustible construction. Clearance to combustibles is defined as the minimum distance from the heater to a surface or object that is necessary to ensure that a surface temperature of 90°F (50°C) above the surrounding ambient temperature is not exceeded.

**Clearances**

| Unit Sizes 130, 180, 260, 310 | Top | | Flue Connector | | Access Panel | | Non-Access Side | | Bottom* | | Rear** | |
|---|---|---|---|---|---|---|---|---|---|---|---|---|
| | inches | mm | inches | mm | inches | mm | inches | mm | inches | mm | inches | mm |
| | 4 | 102 | 6 | 152 | 18 | 457 | 2 | 51 | 1 | 25 | 18 | 457 |

*Suspend the heater so that the bottom is a minimum of 5 feet (1.5M) above the floor.
**Measure rear clearance from the fan motor.

## 5.0 High-Altitude Operation

If the heater is being installed at an elevation above 2000 feet (610M), the input rate will have to be derated. This is done by adjusting the valve outlet pressure. Adjusting the valve outlet pressure is done after the heater is in operation; follow the instructions in Paragraph 7.1.3. Capacities and inputs for derated units are also listed in Paragraph 7.1.3.

## 6.0 Hanging the Heater

**WARNING**

**Unit must be level for proper operation. Do not place or add additional weight to suspended heater (refer to Hazard Levels, page 2).**

Before suspending the heater, check the supporting structure to be used to verify that it has sufficient load-carrying capacity to support the weight of the unit.

| Unit Size | 130 | 180 | 260 | 310 |
|---|---|---|---|---|
| Weight (lb (kg)) | 230 (104) | 245 (111) | 360 (163) | 395 (179) |

**WARNING**

**Check the supporting structure to be used to verify that it has sufficient load carrying capacity to support the weight of the unit. Suspend the heater only from the threaded nut retainers or with a manufacturer provided kit. Do NOT suspend from the heater cabinet.**

When the heater is lifted for suspension, support the bottom of the heater with plywood or other appropriately placed material. If the bottom is not supported, damage could occur. Before hanging, verify that any screws used for holding shipping brackets were reinstalled in the cabinet.

The heater has four-point suspension. Suspension point dimensions are shown in **FIGURE 2**, page 6. A 3/8"-16 threaded nut retainer is located at each suspension point (**FIGURE 4A**).

If ordered with swivel connectors, option CK10, for 1" pipe attach the swivels at the threaded nut retainers. Suspend with 1" pipes (**FIGURE 4B**).

**FIGURE 4A. Suspending Heater with Rods from Threaded Nut Retainers**

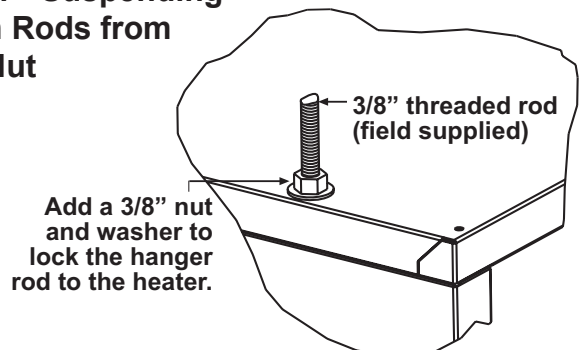


**Be sure the threaded hanger rods are locked to the heater as illustrated. Length of threaded rod extending into the heater MUST NOT exceed 1/2" (13 mm).**

**Recommended maximum hanger rod length is 6 feet (1.8M).**

**FIGURE 4B. Swivel Connectors, Option CK10, to Suspend Heater from 1" Pipes**

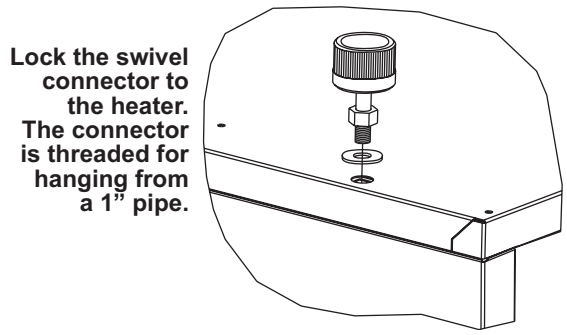


**Be sure the threaded swivel connectors are locked to the heater as illustrated.**

# 7.0 Mechanical

## 7.1 Gas Piping and Pressure

### 7.1.1 Gas Supply

**WARNING**

**This appliance is equipped for a maximum gas supply pressure of 1/2 psi, 3.5 kPa, or 14 inches water column. Supply pressure greater than 1/2 psi requires installation of an additional lockup-type service regulator external to the unit.**

**WARNING: PRESSURE TESTING SUPPLY PIPING**

**Test Pressures Above 1/2 PSI: Disconnect the heater and manual valve from the gas supply line which is to be tested. Cap or plug the supply line.**

**Test Pressures Below 1/2 PSI: Before testing, close the manual valve on the heater.**

All piping must be in accordance with requirements outlined in the National Fuel Gas Code ANSI Z223.1/NFPA 54 (latest edition) or CSA-B149.1 and B149.2 (refer to Paragraph 2). Gas supply piping installation should conform with good practice and with local codes. Support gas piping with pipe hangers, metal strapping, or other suitable material; do not rely on the heater to support the gas pipe.

The heater is orificed for operation with natural gas having a heating value of 1000 (±50) BTU per cubic foot or propane gas with a heating value of 2500 (±100) BTU per cubic foot. If the gas at the installation does not meet these specifications, consult the factory for proper orificing.

Pipe joint compounds (pipe dope) shall be resistant to the action of liquefied petroleum gas or any other chemical constituents of the gas being supplied.

### Sizing Gas Supply Line

**Capacity of Piping**
Cubic Feet per Hour based on 0.3 IN WC Pressure Drop
Specific Gravity for Natural Gas: 0.6 (1000 BTU/Cubic Feet)
Specific Gravity for Propane: 1.6 (2550 BTU/Cubic Feet)

| Pipe Length (Feet) | Pipe Diameter (Inches) | | | | | | | | | | | |
|---|---|---|---|---|---|---|---|---|---|---|---|---|
| | 1/2 | | 3/4 | | 1 | | 1-1/4 | | 1-1/2 | | 2 | |
| | Natural | Propane | Natural | Propane | Natural | Propane | Natural | Propane | Natural | Propane | Natural | Propane |
| 20 | 92 | 56 | 190 | 116 | 350 | 214 | 730 | 445 | 1100 | 671 | 2100 | 1281 |
| 30 | 73 | 45 | 152 | 93 | 285 | 174 | 590 | 360 | 890 | 543 | 1650 | 1007 |
| 40 | 63 | 38 | 130 | 79 | 245 | 149 | 500 | 305 | 760 | 464 | 1450 | 885 |
| 50 | 56 | 34 | 115 | 70 | 215 | 131 | 440 | 268 | 670 | 409 | 1270 | 775 |
| 60 | 50 | 31 | 105 | 64 | 195 | 119 | 400 | 244 | 610 | 372 | 1105 | 674 |
| 70 | 46 | 28 | 96 | 59 | 180 | 110 | 370 | 226 | 560 | 342 | 1050 | 641 |
| 80 | 43 | 26 | 90 | 55 | 170 | 104 | 350 | 214 | 530 | 323 | 990 | 604 |
| 90 | 40 | 24 | 84 | 51 | 160 | 98 | 320 | 195 | 490 | 299 | 930 | 567 |
| 100 | 38 | 23 | 79 | 48 | 150 | 92 | 305 | 186 | 460 | 281 | 870 | 531 |
| 125 | 34 | 21 | 72 | 44 | 130 | 79 | 275 | 168 | 410 | 250 | 780 | 476 |
| 150 | 31 | 19 | 64 | 39 | 120 | 73 | 250 | 153 | 380 | 232 | 710 | 433 |
| 175 | 28 | 17 | 59 | 36 | 110 | 67 | 225 | 137 | 350 | 214 | 650 | 397 |
| 200 | 26 | 16 | 55 | 34 | 100 | 61 | 210 | 128 | 320 | 195 | 610 | 372 |

Note: When sizing supply lines, consider possibilities of future expansion and increased requirements.
Refer to National Fuel Gas Code for additional information on line sizing.

### 7.1.2 Gas Connection

Install a ground joint union and a manual shutoff valve upstream of the unit control system as shown in **FIGURE 5**. Installation of a trap with a minimum 3" (76 mm) drip leg is required. The unit is equipped with a nipple that extends outside the cabinet. The gas connection is either 1/2" or 3/4".

| Unit Size | Gas Connection Size (Inches) |
|---|---|
| 130 and 180 | **1/2** |
| 260 and 310 | **3/4** |

Leak-test all connections by brushing on a leak-detecting solution.

**WARNING**

**All components of a gas supply system must be leak tested prior to placing equipment in service. NEVER TEST FOR LEAKS WITH AN OPEN FLAME. Failure to comply could result in personal injury, property damage or death.**

**FIGURE 5. Gas Connection Is at Pipe Nipple that Extends Outside Cabinet**

**(illustration shows both vertical and horizontal gas supply; requirements are same)**

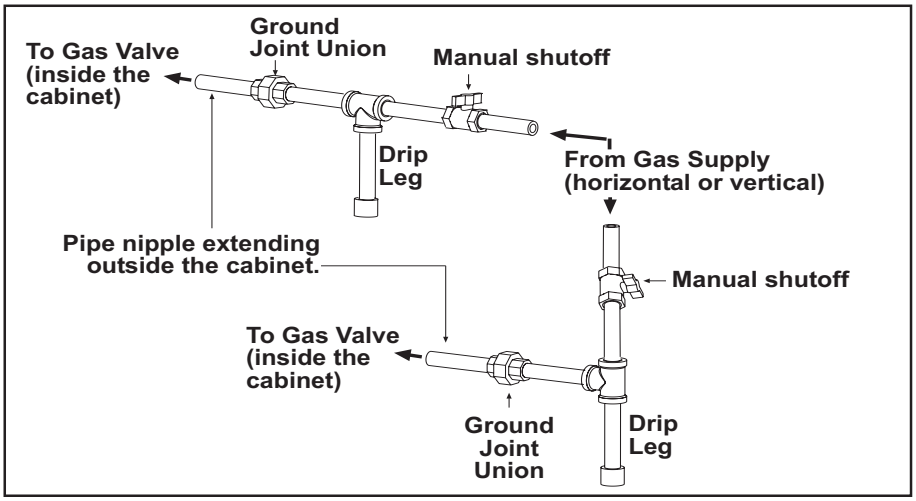


### 7.1.3 Valve Outlet or Orifice Pressure Setting

Measuring valve outlet gas pressure cannot be done until the heater is in operation. It is included in the steps of the "Check-Test-Start" procedure in Paragraph 11. The following warnings and instructions apply.

**NOTE:** A gas conversion kit for changing from natural gas to propane is included with each heater (refer to Paragraph 7.1.4 for conversion instructions).

**WARNING**

**Valve outlet gas pressure must never exceed 3.5 IN W for natural gas and 10 IN WC for propane gas.**

**For Natural Gas:** When the heater leaves the factory, the combination gas valve is set so that the valve outlet gas pressure for a single-stage valve is regulated to 3.5 IN WC Inlet supply pressure to the valve for natural gas must be a minimum of 5 IN WC or as noted on the rating plate and a maximum of 14 IN WC.

**For Propane:** The heater is shipped factory-equipped for use with natural gas. A propane conversion kit is included. Follow the instructions in Paragraph 7.1.4 to convert for use with propane.

At startup, measure the valve outlet pressure. Refer to the pressure chart on page 10 for correct outlet pressure.

When using propane, the inlet supply pressure to the valve must be a minimum of 11 IN WC and a maximum of 14 IN WC.

Before attempting to measure or adjust valve outlet gas pressure, the inlet supply pressure *must* be within the specified range both when the heater is in operation and on standby. Incorrect inlet pressure could cause excessive valve outlet gas pressure immediately or at some future time. If natural gas supply pressure is too high, install a regulator in the supply line before it reaches the heater. If natural gas supply pressure is too low, contact your gas supplier.

### Check Valve Outlet Pressure (can only be done after heater is operating)

**NOTE:** If operating at high altitude, outlet pressure requires adjustment. Follow instructions below.

### Instructions

**1)** Locate the 1/8" output pressure tap on the valve (see **FIGURE 6**, page 10). With the manual valve turned off to prevent flow to the gas valve, connect a manometer to the 1/8" pipe outlet pressure tap in the valve. **NOTE:** A manometer (fluid-filled gauge) is recommended rather than a spring type gauge due to the difficulty of maintaining calibration of a spring type gauge.

**2)** Open the manual valve and operate the heater. Depress and hold the door safety switch. Cycle the burner once or twice to properly seat the adjustment spring in the valve. Measure the outlet pressure of the gas valve.

## 7.0 Mechanical (Continued)

## 7.1 Gas Piping and Pressure (Continued)

Normally when operating on natural gas at sea level, adjustments should not be necessary to the factory setting (for high-altitude settings, see next paragraph).

If adjustment is necessary, remove the cap from the adjustment screw(s). Set pressure to correct settings by turning the regulator screw IN (clockwise) to increase pressure. Turn regulator screw OUT (counterclockwise) to decrease pressure.

**CAUTION: DO NOT bottom out the gas valve regulator adjusting screw. This can result in unregulated manifold pressure causing excess overfire and heat exchanger failure.**

### Derate by Valve Outlet Pressure Adjustment for High-Altitude Operation

### Valve Outlet Pressure Settings by Elevation

**NOTE:** This adjustment can only be done after the heater is in operation. High-altitude adjustment is included in the startup procedures.

### Instructions for High-Altitude Derate

1. Determine the required valve outlet pressure for the elevation where the heater will be operating. If unsure of the elevation, contact the local gas supplier.

| Altitude | | Natural Gas | Propane |
|---|---|---|---|
| Feet | Meters | IN WC | |
| **Manifold Pressure Settings by Altitude for US** | | | |
| 0–2000 | 0–610 | 3.5 | 10.0 |
| 2001–3000 | 611–915 | 3.1 | 8.8 |
| 3001–4000 | 916–1220 | 3.0 | 8.5 |
| 4001–5000 | 1221–1525 | 2.8 | 8.1 |
| 5001–6000 | 1526–1830 | 2.7 | 7.7 |
| 6001–7000 | 1831–2135 | 2.6 | 7.4 |
| 7001–8000 | 2136–2440 | 2.5 | 7.1 |
| 8001–9000 | 2441–2745 | 2.4 | 6.7 |
| 9001–10000 | 2746–3045 | 2.2 | 6.4 |
| **Manifold Pressure Settings by Altitude for Canada** | | | |
| 0–2000 | 0–610 | 3.5 | 10.0 |
| 2001–4500 | 611–1373 | 2.8 | 8.1 |

2. Locate the 1/8" output pressure tap on the valve (see **FIGURE 6**). Turn the switch or knob on the top of the valve to “OFF”. Connect a manometer to the 1/8" pipe outlet pressure tap in the valve. Use a water column manometer that is readable to the nearest tenth of an inch.

**FIGURE 6. Top View of Valve Showing Outlet Pressure Tap and Adjustment Locations**

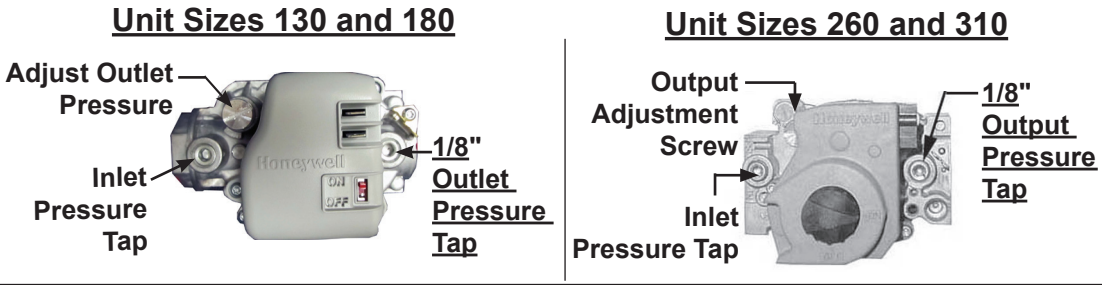


3. Turn the switch or knob on the top of the valve to “ON”. Remove the cap from the output pressure adjusting screw and adjust the gas train pressure to the pressure selected from the table above. Adjust pressure by turning the regulator screw IN (clockwise) to increase pressure or OUT (counterclockwise) to decrease pressure.
4. Turn up the thermostat. Depress and hold the door safety switch. Cycle the burner once or twice to properly seat the adjustment spring in the valve.

   Recheck the pressure. When the outlet pressure is right for the installation, remove the manometer and replace the cap.

   Check for leak at the pressure tap fitting.

5. With the heater operating determine that the inlet pressure to the heater for natural gas is between 5 and 13.5 IN WC and for propane between 10 and 13.5 IN WC. Take this reading as close as possible to the heater (Heaters are equipped with gas valves that have an inlet pressure tap.) If the inlet pressure is not within the specified range, the inlet pressure must be corrected and Steps 3 and 4 repeated.
6. Find the high-altitude adjustment label, PN 197062, in the plastic bag with this installation manual. Using a permanent marker, fill-in the appropriate information from the tables below. Select a location for the label on the outside of the heater access panel so that it will be conspicuous to anyone operating or servicing the unit. Be sure the surface is clean and dry and adhere the label.

The input and/or the capacity of the heater changes with the derate. The tables below list inputs and capacities at altitudes from sea level to 10,000 feet (3045M).

## High-Altitude Capacity Changes

| BTUh Inputs and Capacities by Altitude in US | | | | | | | | | |
|---|---|---|---|---|---|---|---|---|---|
| Altitude | | Normal Input | Thermal Output Capacity | Normal Input | Thermal Output Capacity | Normal Input | Thermal Output Capacity | Normal Input | Thermal Output Capacity |
| **Feet** | **Meters** | **Size 130** | | **Size 180** | | **Size 260** | | **Size 310** | |
| 0–2000 | 0–610 | 131,000 | 121,830 | 175,000 | 159,250 | 260,000 | 239,200 | 305,000 | 277,550 |
| 2001–3000 | 611–915 | 123,140 | 114,520 | 164,500 | 149,695 | 244,400 | 224,848 | 286,700 | 260,897 |
| 3001–4000 | 916–1220 | 120,520 | 112,084 | 161,000 | 146,510 | 239,200 | 220,064 | 280,600 | 255,346 |
| 4001–5000 | 1221–1525 | 117,900 | 109,647 | 157,500 | 143,325 | 234,000 | 215,280 | 274,500 | 249,795 |
| 5001–6000 | 1526–1830 | 115,280 | 107,210 | 154,000 | 140,140 | 228,800 | 210,496 | 268,400 | 244,244 |
| 6001–7000 | 1831–2135 | 112,660 | 104,774 | 150,500 | 136,955 | 223,600 | 205,712 | 262,300 | 238,693 |
| 7001–8000 | 2136–2440 | 110,040 | 102,337 | 147,000 | 133,770 | 218,400 | 200,928 | 256,200 | 233,142 |
| 8001–9000 | 2441–2745 | 107,420 | 99,901 | 143,500 | 130,585 | 213,200 | 196,144 | 250,100 | 227,591 |
| 9001–10000 | 2746–3045 | 104,800 | 97,464 | 140,000 | 127,400 | 208,000 | 191,360 | 244,000 | 222,040 |

| BTUh Inputs and Capacities by Altitude in Canada | | | | | | | | | |
|---|---|---|---|---|---|---|---|---|---|
| Altitude | | Normal Input | Thermal Output Capacity | Normal Input | Thermal Output Capacity | Normal Input | Thermal Output Capacity | Normal Input | Thermal Output Capacity |
| **Feet** | **Meters** | **Size 130** | | **Size 180** | | **Size 260** | | **Size 310** | |
| 0–2000 | 0–610 | 131,000 | 121,830 | 175,000 | 159,250 | 260,000 | 239,200 | 305,000 | 277,550 |
| 2001–4500 | 611–1373 | 117,900 | 109,647 | 157,500 | 143,325 | 234,000 | 215,280 | 274,500 | 249,795 |

## 7.1.4 Converting from Natural Gas to Propane

Find the propane conversion parts in the plastic bag with this installation manual. Verify the components with the list below and follow the instructions to install.

| **Natural to Propane Conversion Kits** | Size | **130** | **180** | **260** | **310** |
|---|---|---|---|---|---|
| | PN | **261647** | **261648** | **221444** | **221445** |
| *Components:* | | | | | |
| Regulator spring kit | | **260605**, H/W #396221 | | **98720**, H/W #393691 | |
| For following: single-stage gas controls with standard or slow-opening pressure regulator | | **x = Variable Numeric Charactor** | | | |
| | | VR82**xx**S | VR82**xx**T | VR82**xx**K | VR82**xx**M |
| | | VR83**xx**S | VR83**xx**T | VR83**xx**K | VR83**xx**M |
| Burner orifice | PN | **120145** | **221265** | **196902** | **196903** |
| | Size | 3.3 mm | #25 | #14 | #8 |
| Conversion tape | | **64391** | | | |
| Propane gas disk | | **37752** | | | |
| Regulated propane label | | **79718** | | | |

## Conversion Instructions

1. Install the propane spring regulator kit in the gas valve. Follow the valve manufacturer's instructions that are included with the spring conversion kit.
2. Attach the propane disk near the gas valve.
3. Install the propane orifice. Refer to **FIGURE 28**, page 37, and locate the gas orifice. Carefully remove the natural gas orifice supplied on the heater. Install the propane orifice.
4. Fill in the information required on the gas conversion tape. Select a location

# 7.0 Mechanical (Continued)

## 7.1 Gas Piping and Pressure (Continued)

### 7.1.4 Converting from Natural Gas to Propane (Continued)

near the rating plate. Be sure the surface is clean and dry and affix the conversion tape and propane label to the heater.

5. During heater startup, follow the instructions in Paragraph 7.1.3 to check the valve outlet pressure.

## 7.2 Venting and Combustion Air

All separated combustion units MUST BE equipped with both combustion air and exhaust piping to the outdoors. The unique concentric adapter box required with this heater allows for both combustion air and exhaust piping with only one horizontal or vertical penetration hole in the building.

Concentric horizontal and vertical vent/combustion air systems (option CC6 or CC2) are the only venting/combustion air systems approved for high efficiency model UEAS separated-combustion unit heaters.

Model UEAS units are certified as Category IV heaters. These heaters are very thermal efficient and will produce condensate during operation. The heater and its venting system must be connected to a drain (refer to Paragraph 7.3, page 25, for instructions on installing the condensate drain).

### 7.2.1 Vent/Combustion Air System Requirements

#### 7.2.1.1 Types of Pipe

Provide field-supplied pipe in the types listed.

**Vent Pipe:** Schedule 40 PVC or CPVC pipe. In Canada, all PVC vent pipe must be approved to ULC 636.

**Combustion Air Inlet Pipe:** Sealed, single-wall galvanized pipe is recommended for the combustion air pipe.

#### 7.2.1.2 Venter Outlet and Combustion Air Inlet

**FIGURE 7. Rear of Heater showing Locations of Both Inlet Air and Venter Outlet Connections**

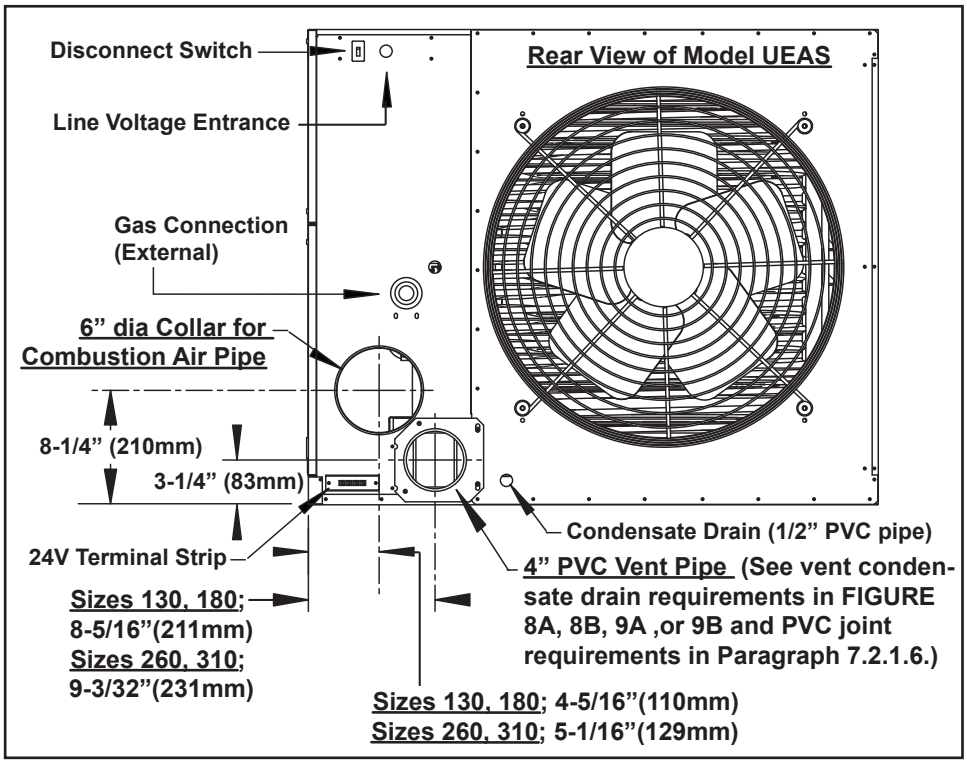


#### 7.2.1.3 Vent Condensate Drain Connection

A condensate drain is required in the vent pipe (see **FIGURES 8A and 8B** for vertical vent or **FIGURES 9A and 9B** for horizontal vent run with either horizontal or vertical vent). For Canadian installation, see **FIGURE 8B or 9B** only. In Canada, all PVC vent pipe must be approved to ULC S636.

The 4" PVC cap with drain connection opening shown in **FIGURES 8A and 9A** is supplied with every heater. The drain connection, drain piping, and 4 × 4 × 4 PVC vent pipe tee are field-supplied. All of the vent and drain components shown in **FIGURES 8B and 9B** are field-supplied.

Refer to Paragraph 7.2.1.6, page 14, for making vent pipe joints.

The vent pipe drain connects into the heater condensate drain (refer to Paragraph 7.3, page 25, for condensate drain installation instructions).

**FIGURE 8A. US INSTALLATION ONLY: Vertical Vent showing Where to Install Condensate Drain Connection Using Factory-Provided 4" PVC Cap**

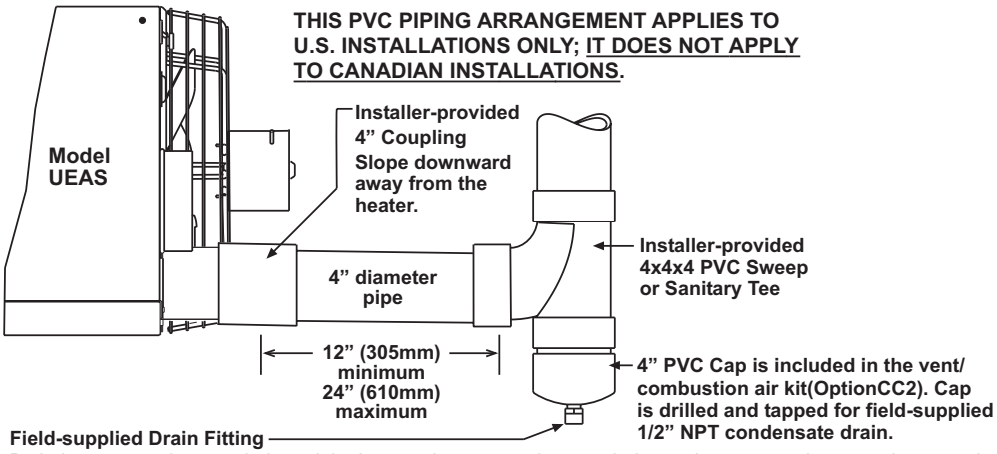


Both the vent condensate drain and the heat exchanger condensate drain require a trap and must go into a sanitary drain. (See Paragraph 7.3, pages 25-26, for requirements on installing the condensate drain.) All drain parts except the 4” PVC cap shown here are field supplied.

**FIGURE 8B. CANADIAN OR US INSTALLATION: Vertical Vent Showing Where to Install Condensate Drain Connection**

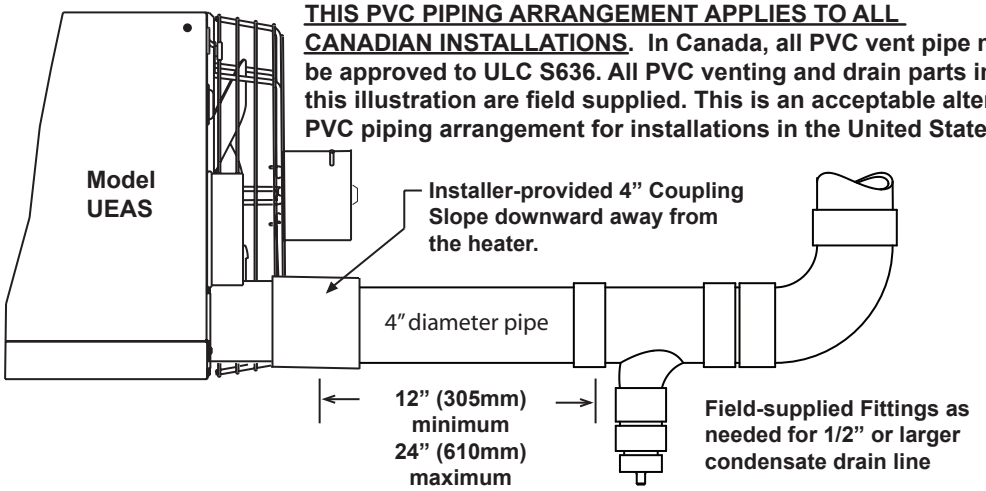


**THIS PVC PIPING ARRANGEMENT APPLIES TO ALL CANADIAN INSTALLATIONS. In Canada, all PVC vent pipe must be approved to ULC S636. All PVC venting and drain parts in this illustration are field supplied. This is an acceptable alternate PVC piping arrangement for installations in the United States.**

**Both the vent condensate drain and the heat exchanger condensate drain require a trap and must go into a sanitary drain. (See Paragraph 7.3, pages 25-26, for requirements on installing the condensate drain.) All vent and drain parts in this illustration are field supplied.**

**FIGURE 9A. US INSTALLATION ONLY: Horizontal or Vertical Vent Showing Where to Install Condensate Drain Connection in Horizontal Vent Run using Factory-Provided 4" PVC Cap**

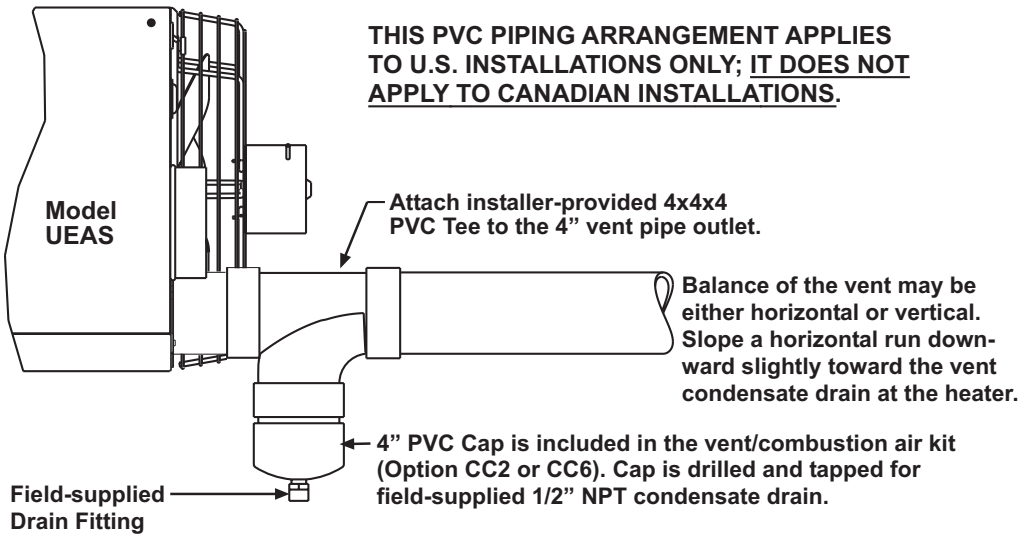


Both the vent condensate drain and the heat exchanger condensate drain require a trap and must go into a sanitary drain. (See Paragraph 7.3, pages 25-26, for requirements on installing the condensate drain.) All drain parts except the 4” PVC cap shown here are field supplied.

**FIGURE 9B. CANADIAN OR US INSTALLATION: Horizontal or Vertical Vent Showing Where to Install Condensate Drain Connection in Horizontal Vent Run**

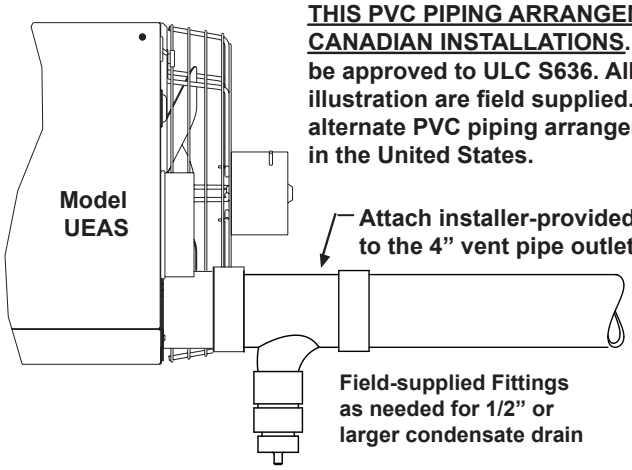


**THIS PVC PIPING ARRANGEMENT APPLIES TO ALL CANADIAN INSTALLATIONS. In Canada, all PVC vent pipe must be approved to ULC S636. All venting and drain parts in this illustration are field supplied. This is an acceptable alternate PVC piping arrangement for installations in the United States.**

Both the vent condensate drain and the heat exchanger condensate drain require a trap and must go into a sanitary drain. (See Paragraph 7.3, pages 25-26, for requirements on installing the condensate drain.) All vent and drain parts in this illustration are field supplied.

### 7.2.1.4 Vent Pipe Diameter and Length

**Vent Pipe Diameter and Maximum Vent Pipe Length from Heater to Terminal End for Vertical and Horizontal Vent**

| Unit Size | Vent Pipe Diameter | | Maximum Vent Pipe Length | | Equivalent Straight Length for | | | |
|---|---|---|---|---|---|---|---|---|
| | | | | | 90° Sweep Elbow* | | 45° Elbow | |
| | inches | mm | feet | M | feet | M | feet | M |
| 130, 180, 260, 310 | 4 | 102 | 50 | 15.2 | 8 | 2.4 | 4 | 1.2 |

*All 90° elbows in the vent system must be sweep type.

### 7.2.1.5 Combustion Air Pipe Diameter and Length

- Minimum length of pipe between the heater and the concentric adapter box is 3 feet (914 mm). The minimum/maximum requirements of the length of vent pipe that extends outdoors are different for horizontal and vertical vent terminals (refer to instructions for option CC2 or option CC6).

**Diameter and Length of the Combustion Air Inlet Pipe**

| Unit Size 130, 180, 260, 310 | Diameter | Length |
|---|---|---|
| Section from heater to concentric adapter box | 6" (152 mm) | Same as vent pipe |
| Section from concentric adapter box to outdoors | 8" (203 mm) | Refer to instructions for option CC2 (pp. 21–24) or option CC6 (pp. 18–21) |

### 7.2.1.6 Joints

Provide pipes and fittings in type specified in Paragraph 7.2.1.1, page 12. **When ready to install the vent system, follow the instructions below to make joints.**

### Combustion Air Pipe

Secure slip-fit joints of single-wall combustion air pipe with sheetmetal screws or rivets. Seal joints and seams with aluminium tape or silicone sealant.

### Vent Pipe

The Schedule 40 PVC or CPVC vent system should be installed in a manner consistent with normal industry standards and in compliance with all local fire and building code requirements. Failure to follow proper installation practices, procedures, or techniques can result in system failure, property damage, or personal injury. The installer is responsible for the installation. Read all of the procedures below before beginning installation. Make joints one at a time as pipe and fitting should be assembled quickly while cement is fluid.

1. **Cut the pipe square.** An angled cut may result in joint failure.

   Remove burrs using a deburring tool, a file, or a knife edge. Remove all burrs from the inside and outside diameter of the cut end of the pipe. Chamfer (bevel) the end of the pipe 10° to 15°.

   b) Use a clean dry cloth to remove surface dirt, grease, and moisture from the pipe sections and fittings.

2. **Check for Proper Fit**
   With light pressure, test the fit. A dry pipe should go one-half to one-third of the way into the fitting hub. Do not use pipe or fittings that are too tight or too loose.
3. **Primer, Cement, and Applicator Requirements**
   a) Primer for joints should conform to ASTM F 656.
   b) Cement for joints should conform to ASTM D 2564.
   c) Use a 2–3" applicator brush for the 4" pipe and fittings.
4. **Applying Primer and Cement** (NOTE: Make joints one at a time as pipe and fitting should be assembled quickly while cement is fluid.)
   a) Apply primer to pipe and fitting surfaces. Do not allow primer to puddle inside the system.
   b) Apply a first coat of cement on the pipe OD. Apply a full even layer of cement for a distance slightly greater than the depth of the socket of the coupler (fitting).
   c) Coat the coupler (fitting) socket with a medium layer of cement, avoiding puddling inside the system.
   d) Apply a second full even layer of cement on the pipe OD.
5. **Join Pipe and Coupler (Fitting)**
   Assemble pieces quickly while cement is fluid. Insert the pipe into the coupler (fitting) until it touches the socket bottom. Turn the pipe a quarter turn. Hold the joint together until the pipe will not pull out.

   Clean excessive cement from the exterior. A properly made joint will have a continuous bead of cement around the perimeter.

### 7.2.1.7 Support

**Vent Pipe Support:** For continued safe operation, the vent system must be properly supported. A 10-foot (3M) length of PVC pipe weighs 20 pounds (9 kg) and has an expansion rate of four times that of metal pipe.

Horizontal CPVC or PVC vent must be supported every 6 feet (1.8M). The hangers should provide as much bearing surface as possible and must be free of sharp edges and burrs. Hangers must allow the pipe to expand laterally. Consider pipe expansion when placing hangers. Changes in pipe direction will allow for expansion. Hangers must be placed to allow for some direction movement. The slip joint at the concentric adapter is designed to permit some limited expansion. DO NOT USE THE HEATER OR CONCENTRIC ADAPTER BOX TO PROVIDE VENT PIPE SUPPORT.

For a vertical CPVC or PVC vent, it is recommended that an engineer design the vertical support system. An acceptable support for a simple vertical vent that is 30 feet (9.1M) or less and rises closely from the heater is illustrated in **FIGURE 10**. DO NOT USE THE HEATER OR CONCENTRIC ADAPTER TO PROVIDE VENT PIPE SUPPORT.

**FIGURE 10. To Allow for Expansion, Use Field-Supplied Cradle-Type Vent Pipe Support**

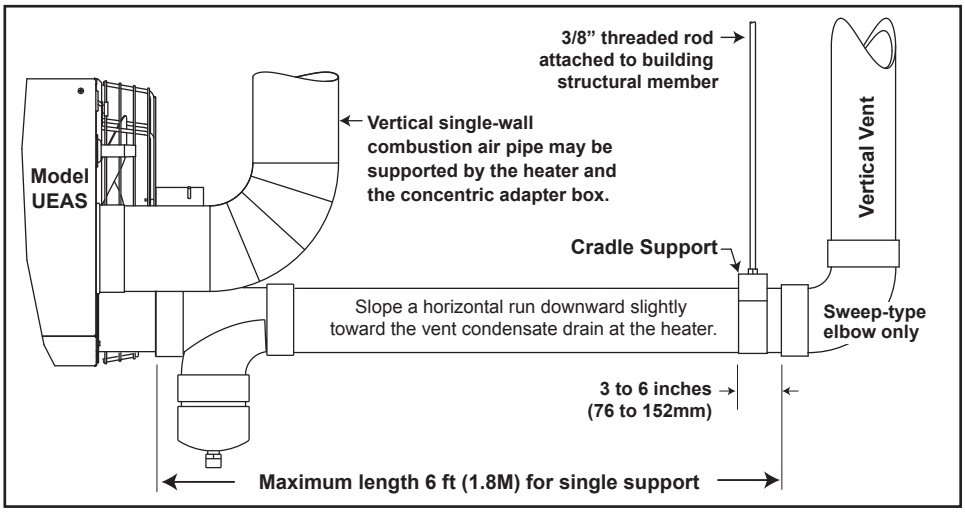

## 7.0 Mechanical (Continued)

## 7.2 Venting and Combustion Air (Continued)

### 7.2.1 Vent/Combustion Air System Requirements (Continued)

### 7.2.1.7 Support (Continued)

**Combustion Air Pipe Support:** Support a single-wall metal horizontal combustion air run every 6 feet (1.8M). Support a vertical single-wall metal combustion air pipe in accordance with accepted industry practices. The heater and concentric adapter box may be used to support a vertical combustion air pipe.

### 7.2.1.8 Vent Pipe Clearance

**Vent Pipe:** Do not install the vent piping near any high temperature steam lines, radiant heaters, or other sources of heat.

### 7.2.1.9 Concentric Adapter Box

All Model UEAS installations require a concentric adapter box as illustrated in **FIGURES 11, 12, 13, and 14**. The concentric adapter box is included in both the horizontal and vertical vent/combustion air kits. Installation is included in the instructions for options CC6 and CC2.

**FIGURE 11. Concentric Adapter Box Is Required Part of All Installations**

A vent/combustion air kit which includes the concentric adapter box is ordered with the heater. A horizontal terminal vent/combustion air kit is option CC6; a vertical terminal vent/combustion air kit is option CC2.

**Heater Side View of the Concentric Adapter Box**

**FIGURE 12. Concentric Adapter Box Dimensions**

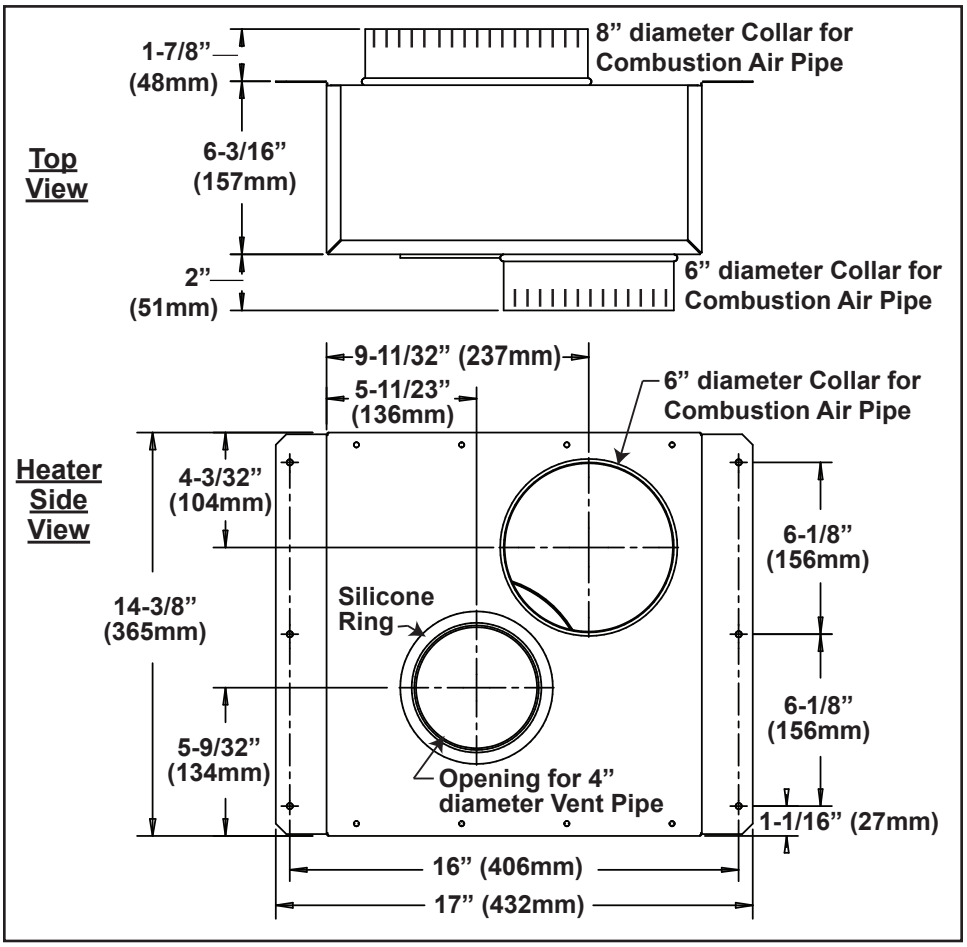

**FIGURE 13. Concentric Adapter Box Airflow**

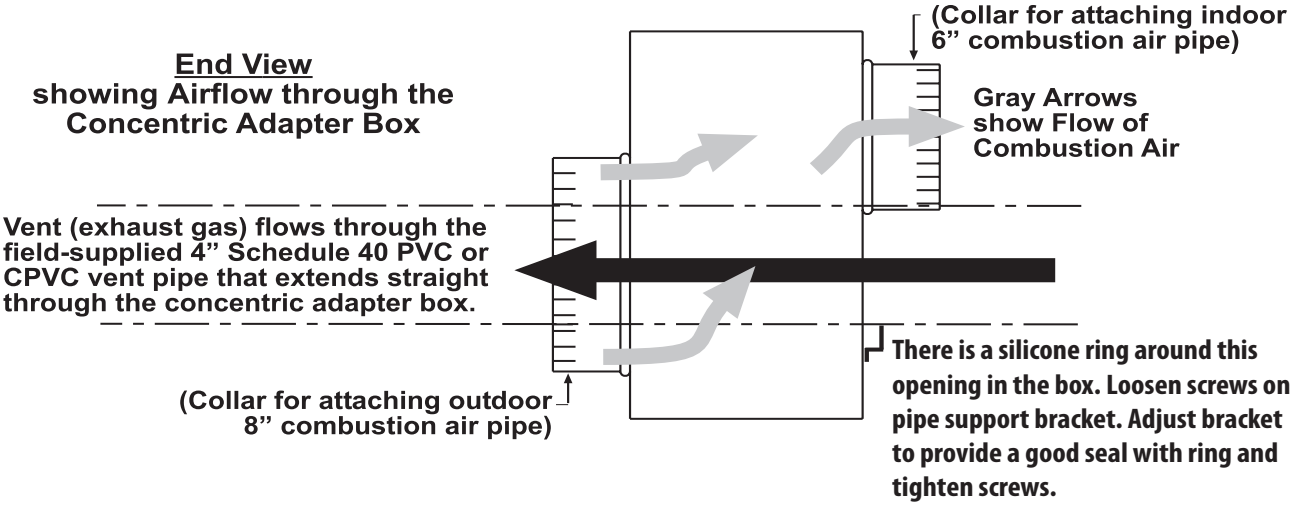


**FIGURE 14. Concentric Adapter Box Connections**

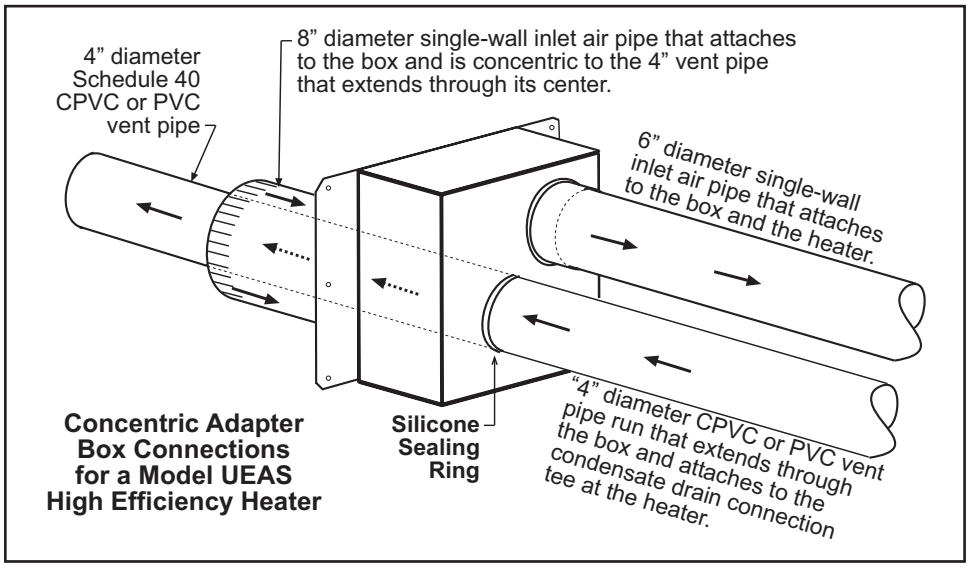


# HORIZONTAL OR VERTICAL VENT TERMINAL?

**FIGURE 15. Is Separated-Combustion Vent/Combustion Air System Horizontal or Vertical?**

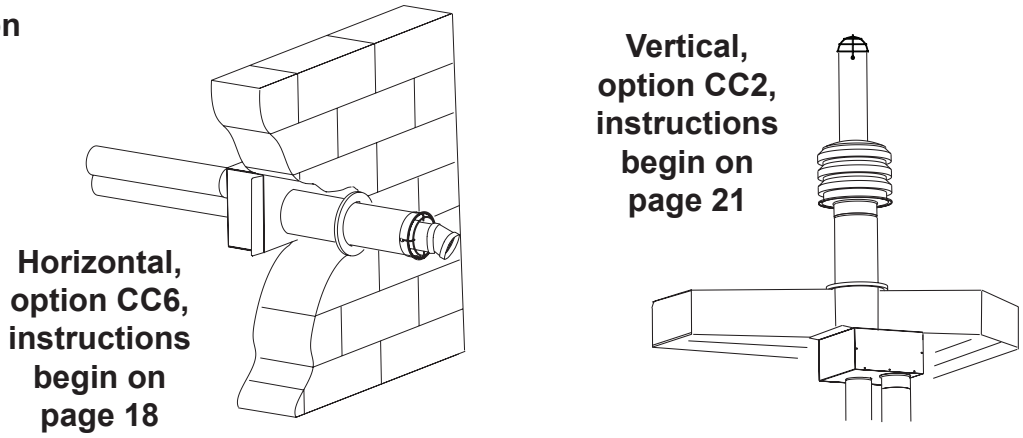

## 7.0 Mechanical (Continued)

## 7.2 Venting and Combustion Air (Continued)

### 7.2.2 HORIZONTAL VENT TERMINAL Installation (Option CC6)

**Components Required (Factory and Field)**

**Parts in the Horizontal Vent/Combustion Air Terminal Package (Option CC6)**

| Complete Horizontal Vent/Combustion Air Terminal Kit (Same as Option CC6), PN 221247 | | |
|---|---|---|
| **Qty** | **PN** | **Description** |
| 1 | **221069** | Concentric adapter box with silicone sealing ring (refer to **Paragraph 7.2.1.9**, pages 16–17) |
| 1 | **221089** | Bird screen for exhaust outlet |
| 1 | **124940** | Ring guard for air inlet 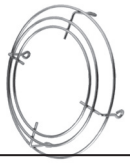 |
| 4 | **37661** | #10-16 × 1/2" long screws to attach inlet air guard |
| 4 | **221186** | Spacers for inlet air guard |
| 1 | **221091** | 4" PVC cap for vent condensate drain connection (see **FIGURE 8A and 9A** on page 13) |

Field-supplied requirements:

- Vent pipes and fittings as illustrated in **FIGURE 8A, 8B, 9A or 9B** on pages 13–14 and elbow (22.5° elbow if available) as shown in **FIGURE 16**, page 20
- Combustion air pipes (6" and 8" single-wall galvanized pipe)
- Flashing
- Sheetmetal screws, tape, primer, cement, and sealant as required

Before beginning, verify that the kit is at the site and that all components are correct for the installation. Be sure all required field-supplied parts are available.

**Installation Instructions for Horizontal Vent/ Combustion Air Kit Option CC6**
(in compliance with requirements on pages 12–17)

**1. Determine the location on the outside wall for the vent/combustion air terminal.** Location must comply with vent length requirement in Paragraph 7.2.1.4 on page 14. Also, read the “Hazards of Chlorine” on page 5 concerning location of the combustion air inlet.

In most applications, the terminal will be on approximately the same level as the heater. Allow for 1/4" per foot (6 mm per 305 mm) **downward pitch of the vent pipe from the concentric adapter toward the heater** for condensate to drain. Minimum clearances for the horizontal vent terminal are shown in the table on page 19. Avoid positioning the vent terminal above a walkway as there may be a small amount of condensate that drips from the end of the vent/combustion air terminal. In cold climates, the condensate may form icicles. Also, select a location that complies with adjoining building clearances as shown in **FIGURE 16**, page 20.

Products of combustion can cause discoloring of some building finishes and deterioration of masonry materials. Applying a clear silicone sealant that is normally used to protect concrete driveways can protect masonry materials. If discoloration is an esthetic problem, relocate the vent or install a vertical vent.

**WARNING**

**All vent terminals must be positioned or located away from fresh air intakes, doors and windows to preclude combustion products from entering occupied space. Failure to comply could result in severe personal injury or death and/or property damage.**

**WARNING**

**In climates with below freezing temperatures, condensate may form icicles on the vent terminal. Locate the terminal where a falling icicle would not be a hazard.**

## Clearances to Horizontal Vent Terminal

| Structure | Minimum Clearances for Vent Terminal Location (All Directions Unless Specified) |
|---|---|
| Forced air inlet within 10 feet (3.1M)* | 3 feet (0.9 meters) above |
| Combustion air inlet of another appliance | 6 feet (1.8 meters) |
| Door, window, or gravity air inlet (any building opening) | 4 feet (1.2 meters) horizontally |
| | 4 feet (1.2 meters) below |
| | 1 feet (305 mm) above |
| Electric meter, gas meter** and relief equipment | US: feet (1.2 meters) horizontally |
| | Canada: 6 feet (1.8 meters) |
| Gas regulator** | 3 feet (0.9 meters) horizontally |
| Adjoining building or parapet | 6 feet (1.8 meters) |
| Adjacent public walkways | 7 feet (2.1 meters) above |
| Grade (ground level) | 3 feet (0.9 meters) above*** |

*Does not apply to the inlet of a direct vent appliance.
**Do not terminate the vent directly above a gas meter or service regulator.
***Consider local snow depth conditions. The vent must be at least 6" (152 mm) higher than anticipated snow depth.

**2. Install the vent pipe and combustion air pipe runs (from the heater to near the location selected through the wall).**

- Use the type of pipe specified in Paragraph 7.2.1.1, page 12.
- Comply with the requirements in Paragraph 7.2.1.2 and 7.2.1.3, pages 12–14, when attaching pipes to the heater and installing the condensate drain connection in the vent.
- Overall vent length must comply with the table in Paragraph 7.2.1.4, page 14.
- Make all joints according to the instructions in Paragraph 7.2.1.6, pages 14–15. Extend the runs close to the wall location selected in Step 1 above. Provide 1/4" per foot (6 mm per 305 mm) downward pitch of the vent pipe toward the heater for condensate to drain (**NOTE**: The vent pipe will extend through the wall after the concentric adapter box is installed. The indoor combustion air pipe will end at the concentric adapter box.)
- Support pipes as required in Paragraph 7.2.1.7, pages 15–16.

**3. Cut a clearance hole through the outside wall for the 8" diameter combustion air pipe**.

Outside wall construction thickness should be 1" (25 mm) minimum and 48" (1219 mm) maximum. Position the box against the wall. Being sure that the location and box orientation are correct, mark the location where the combustion air pipe will extend through the wall. Cut a 9" diameter hole so that the 8" pipe will be centered through the 9" opening.

**4. Prepare the concentric adapter box.**

**4a) Determine the length of the 8" diameter combustion air pipe and attach it to the box.**

Comply with the requirements in **FIGURE 16**. Determine the length of the pipe by measuring the wall thickness, ***plus*** 4–16" (102–406 mm) beyond the wall, ***minus*** the width of the pipe crimp which will be cut off.

So that the 8" inlet air guard will fit properly, cut the crimp off the end of the combustion air pipe. Turn the combustion air pipe so that the seam will be toward the top side of the box and slide it on the collar. Attach the combustion air pipe to the collar with sheetmetal screws. Seal the joint and seam with sealant or tape.

**4b) Drill a drain hole.** On the bottom side of the pipe, mark a location that will be outside between the end of pipe and the building (about 2/3 of the distance from the end of the pipe to the edge of the building) when the box is installed. Drill a 1/2" diameter drain hole in the pipe at that location.

**4c) Attach the inlet air guard.** Position the inlet air ring guard over the end of the combustion air pipe (see **FIGURE 16**). Attach the guard to the inlet air pipe with the four 1/2" long screws provided.

**FIGURE 16. Typical Installation of High Efficiency, Separated-Combustion Unit with Horizontal Vent/Combustion Air Terminal (Option CC6)**

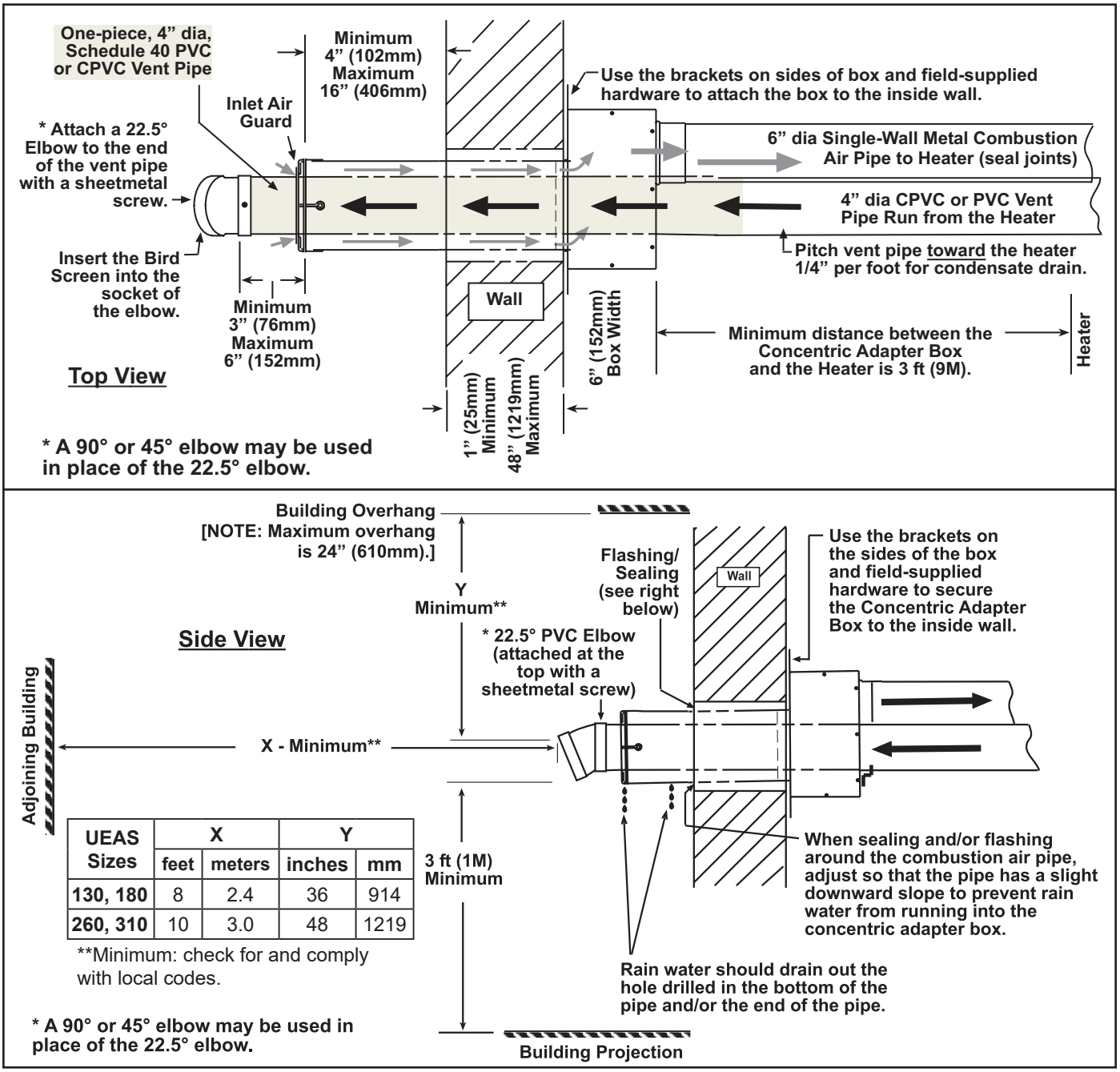


| UEAS Sizes | X | | Y | |
|---|---|---|---|---|
| | feet | meters | inches | mm |
| 130, 180 | 8 | 2.4 | 36 | 914 |
| 260, 310 | 10 | 3.0 | 48 | 1219 |

**Minimum: check for and comply with local codes.

**5. Attach the concentric adapter box to the wall.**

Insert the combustion air pipe with inlet guard attached out through the wall. Position the box so that the pipe is centered in the opening. Attach the brackets to the wall with field-supplied hardware.

**6. Determine length and install the "terminal-end" vent pipe.**

**6a) Determine length of pipe.** The length of the continuous piece of terminal-end vent pipe is determined by the installation within the maximum and minimum requirements. See **FIGURE 16** to determine lengths of each segment and calculate the total length required. The "terminal-end" vent pipe extending through the box and concentric through the inlet air pipe must be one piece of vent pipe without joints.

**6b) Drill a hole to attach the elbow at the end and install the pipe.** Being sure the vent pipe is in the proper flow direction, temporarily fit the elbow on the exhaust end of the vent pipe. For easier future service, the elbow is being attached using one field-provided 3/4" long sheetmetal screw. Using a drill that is a size smaller than the 3/4" long sheetmetal screw, with the elbow pointing down, drill a pilot hole through the top center of the elbow socket and the vent pipe.

Remove the elbow. In the elbow only, enlarge the drilled hole to 7/32". The elbow will be attached from the outside in Step 8b).

With the pipe turned so that the drilled hole is at the top, slide the end of the vent pipe out through the box and the combustion air pipe. Position the vent pipe so that it will extend between 3" (76 mm) and 6" (152 mm) past the end of the combustion air pipe. Adjust the pipe so that the screw hole is in the top center. Verify that the silicone sealing ring on the box is properly seated. **Do not add sealant to the ring**.

Join the “terminal end” vent pipe to the vent pipe run. Recheck the silicone ring to be sure that it is still properly seated.

**7. Attach the indoor portion of the combustion air pipe.** Use sheetmetal screws to attach the single-wall combustion air pipe run to the collar on the concentric adapter box. Seal with tape or sealant.

**8. On the outside, install the inlet air guard spacers, attach the elbow, install the bird screen, and seal or flash around the combustion air pipe.**

**8a)** Remove the screws holding the inlet air guard (installed in Step 4c). Slide the spacers onto the ends of the four spokes that support the vent pipe. Reattach the guard.

**8b)** Slide the elbow over the end of the vent pipe and attach it with the field-provided 3/4" long sheetmetal screw. Slide the bird screen into the socket on the open end of the elbow. The elbow must be pointing down.

**8c)** Seal around the combustion air pipe with an outdoor caulking material or a masonry cement or a combination of flashing and caulking. Adjust the sealant and the pipe so that the metal pipe will have a slight downward slope to the outside. The downward slope and the 1/2" drain hole (Step 4b) will prevent rain water from running through the pipe into the concentric adapter box.

Installation of the horizontal vent and combustion air system on your separated-combustion unit is complete. Verify compliance with all venting installation requirements, pages 12–17, and **FIGURE 16**.

## 7.2.3 VERTICAL VENT TERMINAL Installation (Option CC2)

### Parts in the Vertical Vent Terminal/Combustion Air Package (Option CC2)

### Components Required—Factory and Field

| Complete Vertical Vent/Combustion Air Kit (Same as Option CC2), PN 221248 | | |
|---|---|---|
| **Qty** | **PN** | **Description** |
| 1 | **221069** | Concentric adapter box with silicone sealing ring (refer to refer to **Paragraph 7.2.1.9**, pages 16–17) |
| 1 | **221215** | Bird guard 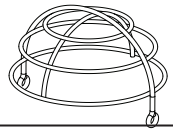 |
| 2 | **37661** | Screws for bird guard. #10 × 1/2" self-drilling |
| 1 | **221250** | Combustion air inlet |
| 1 | **221185** | Rain collar |
| 1 | **221091** | 4" PVC cap for vent condensate drain connection (see **FIGURE 8A and 9A** on page 13) |

Field-supplied requirements:

- Vent pipes and fittings as illustrated in **FIGURE 8A, 8B, 9A or 9B** on pages 13 and 14
- Combustion air pipes (6" and 8" single-wall galvanized pipe)
- Flashing
- Sheetmetal screws, tape, primer, cement, and sealant as required

## 7.2 Venting and Combustion Air (Continued)

### 7.2.3 VERTICAL VENT TERMINAL Installation (Option CC2) (Continued)

Before beginning, verify that the kit is at the site and that all components are correct for the installation. Be sure all required field-supplied parts are available.

**Installation Instructions for Vertical Vent/ Combustion Air Kit Option CC2**
(in compliance with requirements on pages 12–17)

**1. Determine the location of the vent terminal.**
Select a location away from fresh air intakes, allowing space for the concentric adapter box inside. Vent terminal must be located from adjacent buildings as shown in **FIGURE 20**, page 24.

**WARNING**

**All vent terminals must be positioned or located away from fresh air intakes, doors and windows to preclude combustion products from entering occupied space. Failure to comply could result in severe personal injury or death and/or property damage.**

If more than one vertical concentric vent/combustion air terminal (option CC2) is being installed, the minimum spacing between vent centerlines is determined by the minimum outdoor design temperature (most extreme outdoor condition at the installation site).

**Minimum Vent Terminal Spacing when Installing More than One Heater**

| Minimum Outdoor Design Temperature | | Minimum Spacing between Centerlines of Vent Pipes in Vertical Combustion Air/Vent Terminals (Option CC2) | |
|---|---|---|---|
| °F | °C | inches | mm |
| 31 or warmer | 0 or warmer | 36 | 914 |
| −10 to 30 | −23 to −1 | 60 | 1524 |
| less than −10 | less than −23 | 84 | 2134 |

**2. Install the Vent Pipe and Combustion Air Pipe Runs (from the heater to near the location selected through the roof).**

- Use the type of pipe specified in Paragraph 7.2.1.1, page 12.
- Comply with requirements in Paragraph 7.2.1.2 and 7.2.1.3, pages 12–14, when attaching pipes to the heater when installing the condensate drain connection.
- Overall vent length must comply with table in Paragraph 7.2.1.4, page 14.
- Make all joints according to the instructions in Paragraph 7.2.1.6, page 14–15. Extend the runs close to the roof location selected in Step 1 above. **NOTE: The vent pipe will extend through the roof after the concentric adapter box is installed. The indoor combustion air pipe will end at the box.**
- Support pipes as required in Paragraph 7.2.1.7, pages 15–16.

**3. Cut a clearance hole through the roof for the 8" diameter combustion air pipe.**
Position the concentric adapter box against the inside of the roof. Being sure that the location and orientation of the box are correct, mark and cut the hole for the 8" combustion air pipe.

**4. Attach the combustion air pipe to the concentric adapter box.**
**4a)** Determine the length of the 8" outdoor combustion air pipe so that dimension ”X” in **FIGURE 17** is equal to the roof thickness plus anticipated snow depth, but does not exceed 48" (1219 mm) or have less than 18" (457 mm) of pipe above the roof.
**4b)** Attach the combustion air pipe to the collar of the concentric adapter box with sheetmetal screws. Seal joint and seam with tape or sealant.

**5. Attach the concentric adapter box to the underside of the roof.**
(Hardware and flashing are field-supplied.) On the inside, insert the combustion air pipe up through the opening, position the box to match the pipe runs, and attach the brackets to the roof.

**6. Determine the length and install the "terminal end" vent pipe.**

**6a)** Refer to **FIGURE 17** and determine the required length of the continuous section of vent pipe. The length of the vent pipe extending through the box, through the combustion air inlet pipe, and the height required above the combustion air inlet air pipe must be one piece of pipe without joints.

Determine the length by adding the requirements:

Starting with at least 6" (152 mm) below the box for attaching to the coupler;

***plus*** 6" (152 mm) through the concentric adapter box;

***plus*** the length of the combustion air pipe;

***plus*** a **minimum** of 23" (584 mm) beyond the top of the combustion air pipe.

Total is the **minimum length** of the vent pipe section.

**NOTE: A longer vent pipe may be required; see FIGURE 17.**

**6b) Install the "terminal end" vent pipe.**

Being sure the pipe is in the proper flow direction, slide the end into the box and out through the combustion air pipe. Position the pipe so that it extends beyond the combustion air pipe the height determined in **6a)** above. Verify that the silicone ring is seated properly.

Join the terminal vent pipe to the vent pipe run. Recheck the silicone ring to be sure that it is still properly seated.

**FIGURE 17. Concentric Adapter, Outdoor Combustion Air Pipe, and Concentric Vent Pipe**

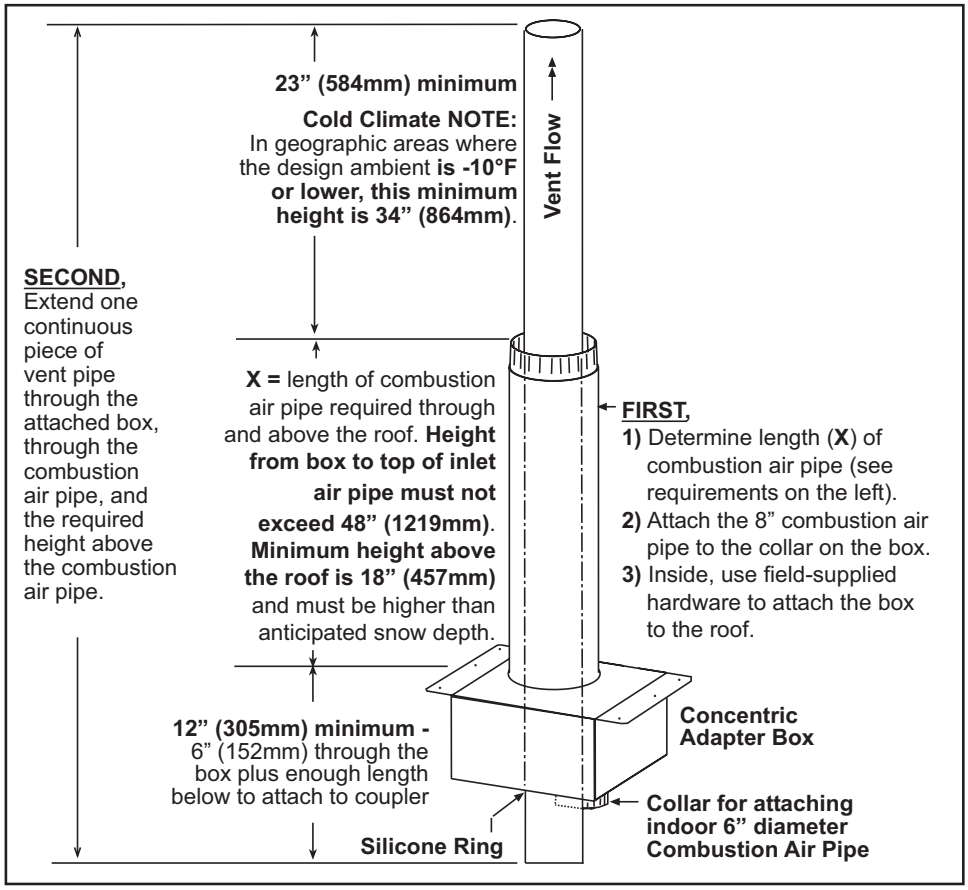


**FIGURE 18. Outside View of Combustion Air Pipe with Box Attached to Under Side of Roof**

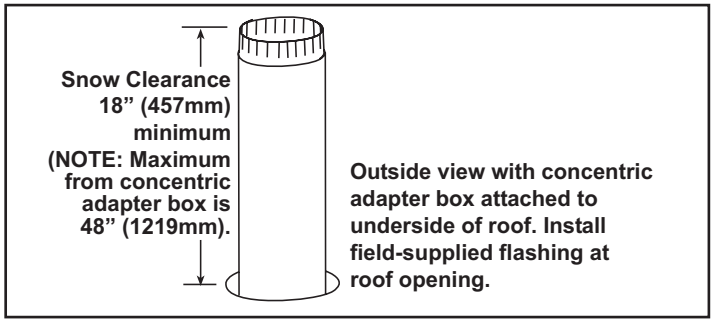

## 7.2.3 VERTICAL VENT TERMINAL Installation (Continued)

**7. Attach the indoor combustion air pipe**. Use field-supplied sheetmetal screws to attach the single-wall combustion air pipe run to the collar on the concentric adapter box. Seal with tape or sealant.

**8. On the outside, install the combustion air inlet, the rain collar, the bird screen, and field-supplied flashing.**

**8a)** Slide the combustion air inlet over the vent pipe and fasten the collar to the combustion air pipe with sheetmetal screws. Seal the joint with tape or sealant (see **FIGURE 19**).

**8b)** To prevent rain water leakage, slide the rain collar over the end of the 4" vent pipe and seat it flush on the top of combustion air inlet. **Do not** use sealant.

**8c)** Attach the bird guard with the two sheetmetal screws provided (see **FIGURE 19**).

**8d)** On the outside (see **FIGURE 18**), flash the combustion air pipe to the roof. Flashing is field-supplied.

**FIGURE 19. Install Combustion Air Inlet, Rain Collar, and Bird Screen**

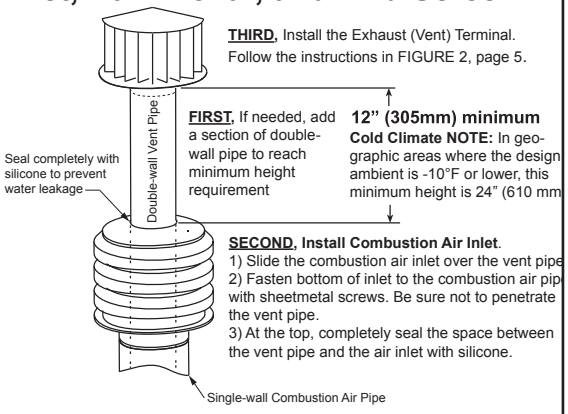


Installation of the vertical vent and combustion air system on your separated-combustion unit is complete. Verify compliance with all venting installation requirements, pages 12–17 and **FIGURE 20**.

**FIGURE 20. Typical Installation of High Efficiency, Separated-Combustion Unit with Vertical Vent/Combustion Air Terminal (Option CC2)**

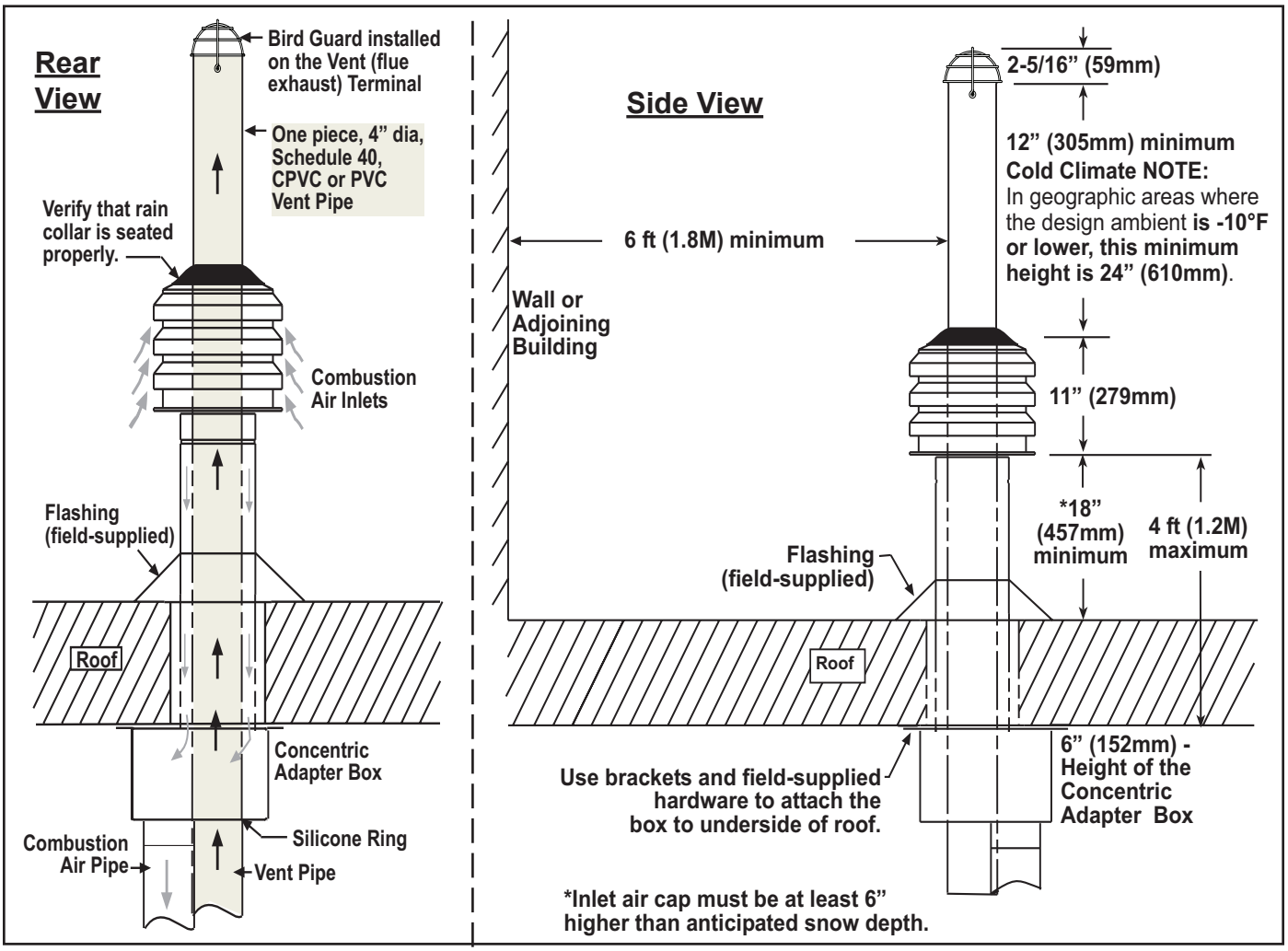

## 7.3 Condensate Drain System

The installer must provide a condensate drain system. A 4" PVC cleanout cap (**FIGURE 22**) that is drilled and tapped for a 1/2" NPT fitting is furnished with the heater for the vent drain. All other material must be field-supplied.

During operation, condensate is both produced in the heater and collected from the venting system. Therefore, the installation requires a condensate drain from the secondary heat exchanger (**FIGURE 21**) and a condensate drain from the vent pipe (**FIGURE 22**).

**CAUTION: Apply general plumbing practices if pipe insulation or heat tapes are required to prevent freezing of the condensate drain system.**

For safe performance of the heater, each condensate drain must include a trap as shown in **FIGURES 21 and 22**.

Downstream from the traps the condensate drains may be joined and both must be connected to a sanitary drain within the building. Check codes to be certain that this is permitted. **NOTE: Condensate from the heater has a pH of 6 and is not harmful to a sanitary drain. Actual pH may vary ± 1 depending upon fuel and combustion air.** Unit sizes 130 and 180 produce approximately one gallon (4 liters) of condensate per hour. Unit sizes 260 and 310 produce approximately two gallons (8 liters) of condensate per hour.

A condensate disposal system that relies on gravity should be satisfactory for most installations since unit heaters are normally installed several feet above the floor. If a gravity system is not possible, a condensate pump may be installed. There are a number of commercially available pumps made for this purpose. If using a condensate pump, follow the pump manufacturer's installation recommendations.

### Condensate Drain Traps

Two condensate drain traps are required.

- **FIGURE 21** illustrates the trap in the drain attached to the heater and lists the minimum required leg dimensions for that trap.

**FIGURE 21. Secondary Heat Exchanger Condensate Drain Trap**

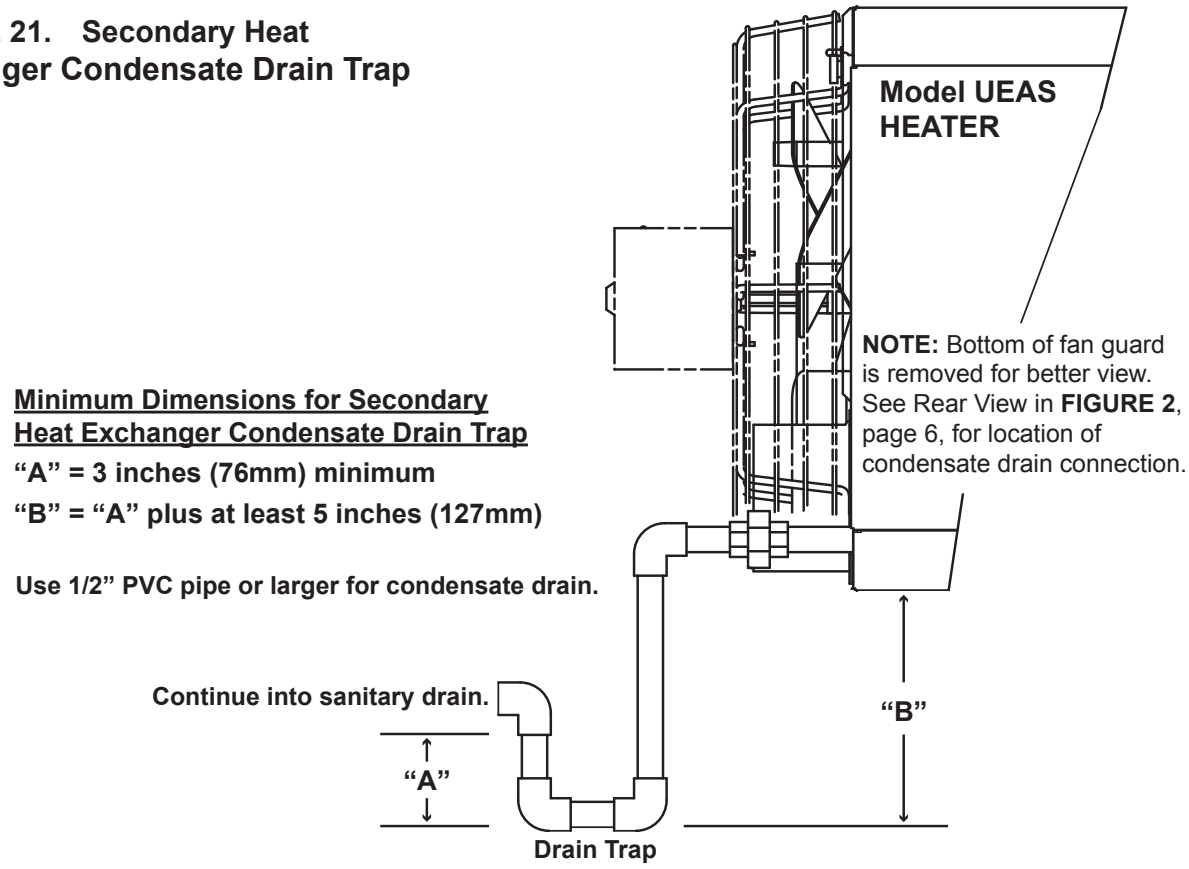

## 7.3 Condensate Drain System (Continued)

- **FIGURE 22** illustrates the vent pipe drain trap and lists the required length difference for the trap legs.

**FIGURE 22. Vent Pipe Condensate Drain Trap**

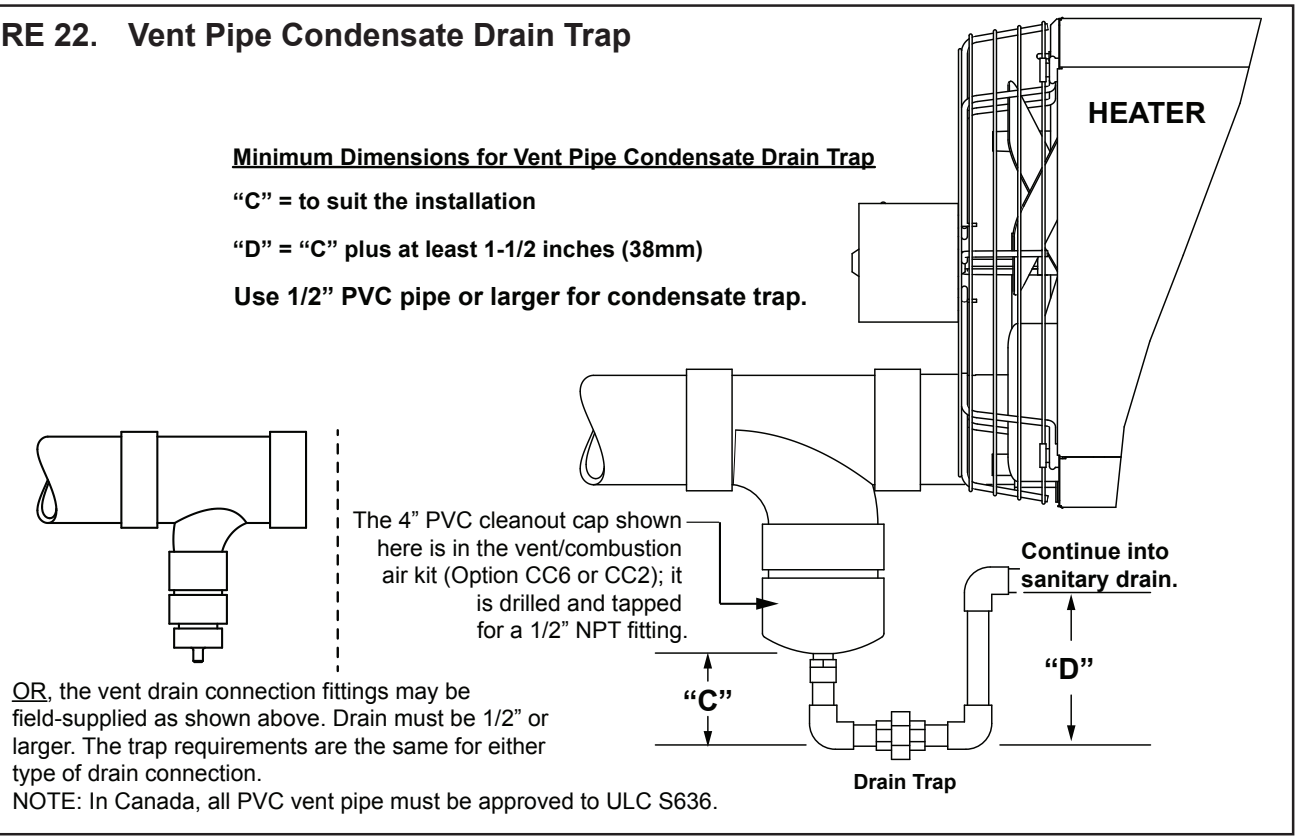


The most important part of fabricating and assembling the traps is the length of the individual legs of the traps. If the difference in the lengths of the legs of the traps are not as illustrated, it could prevent proper drainage of the condensate and possibly permit vent gas to enter the building. Note that the length difference is also what provides a "water seal" that prevents leakage of vent gas into the sanitary drain. The two traps may be drained into a common pipe that is connected to the sanitary drain.

The orientation of the piping is not critical and may be arranged to suit the installation. Unions are recommended to permit maintenance of the drains and to facilitate service of the heater. A union is shown in both of the traps and a third union is recommended in the drain pipe. If pipe insulation or heat tapes are required to prevent freezing, use should be in accordance with general accepted plumbing practices.

# 8.0 Electrical and Wiring

**CAUTION: Route wires so that they do not contact the flue wrapper or venter housing.**

## 8.1 Electrical Supply

All electrical wiring and connections, including electrical grounding MUST be made in accordance with the National Electric Code ANSI/NFPA No. 70 (latest edition) or, in Canada, with CSA Standard C22.1. In addition, the installer should be aware of any local ordinances or gas company requirements that might apply.

Check the rating plate on the heater for the supply voltage and current requirements. A dedicated line voltage supply with disconnect switch should be run directly from the main electrical panel to the heater. All external wiring must be within approved conduit and have a minimum temperature rise rating of 60°C. Conduit must be run so as not to interfere with the heater access panel. If the installation requires a stepdown transformer (option CG), follow the instructions shipped with the option package for attaching the transformer to the heater.

The electrical supply enters at the rear of the heater (**FIGURE 24**). A built-in disconnect switch (20A @ 115V; 10A @ 230V Rating) is included. Supply wiring connects to leads located inside a sealed electrical box. To maintain the sealing feature of the electrical box, always replace the cover plate.

The circuit board (see **FIGURE 23**) is located inside on the bottom of the control compartment. The circuit board is polarity sensitive. It is advisable to check the electrical supply to be certain that the black wire is the “hot” wire and that the white wire is the neutral wire. The supply connection made to “L1” on the circuit board must be the “hot” wire.

**FIGURE 23. Supply Wiring Connections at Circuit Board (DSI Integrated Control Module)**

**NOTE:** Circuit board is polarity sensitive; “hot” wire MUST BE connected to Terminal L1.

**Supply Wiring Connections**

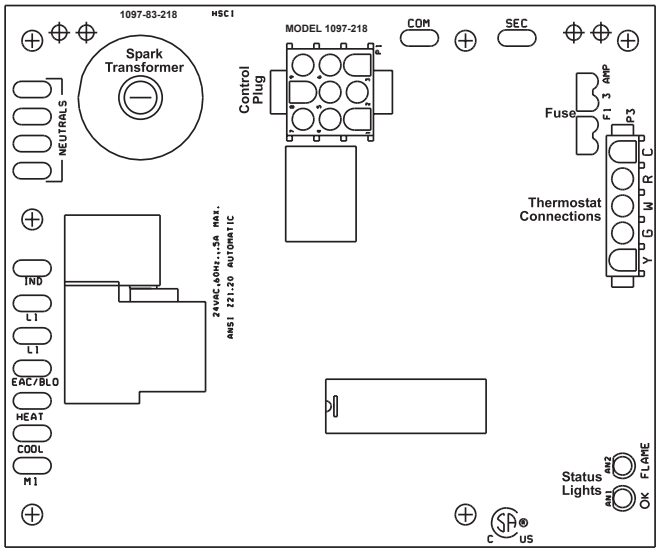


**CAUTION: If any of the original wire as supplied with the appliance must be replaced, it must be replaced with wiring material having a temperature rating of at least 105°C, except for limit control, vent temperature limit, and sensor lead wires which must be 150°C (refer to Hazard Levels, page 2).**

## 8.2 24V Control Wiring Connections

The terminal strip for 24 volt thermostat connection is located on the outside of the cabinet at the back of the heater (see **FIGURE 24**). Wires from the terminal strip are factory-wired to the circuit board.

Use either an optional thermostat available with the heater or a field-supplied 24-volt thermostat. Install according to the thermostat manufacturer’s instructions, paying particular attention to the requirements regarding the location of the thermostat.

**FIGURE 24. Terminal Strip for 24-volt Wiring Is on Outside Rear of Heater**

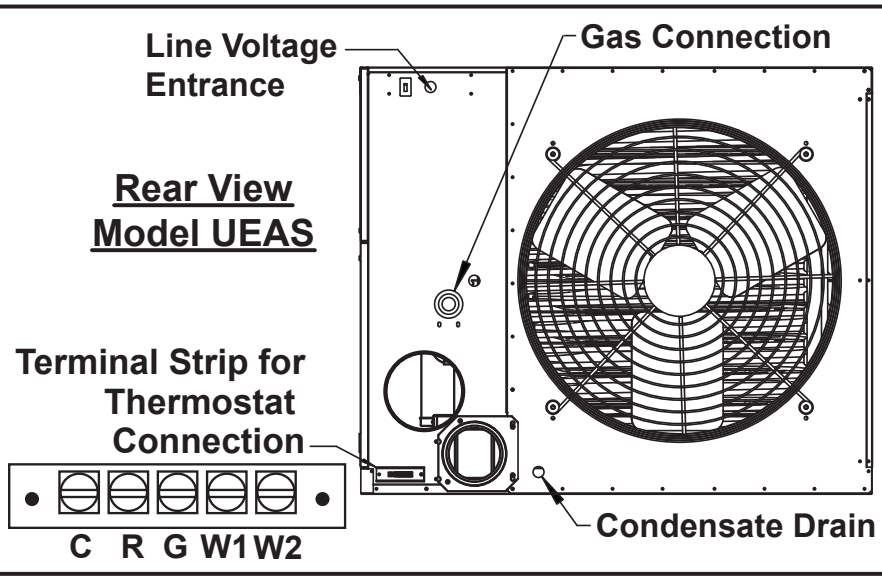

## 8.3 Typical Wiring Diagram

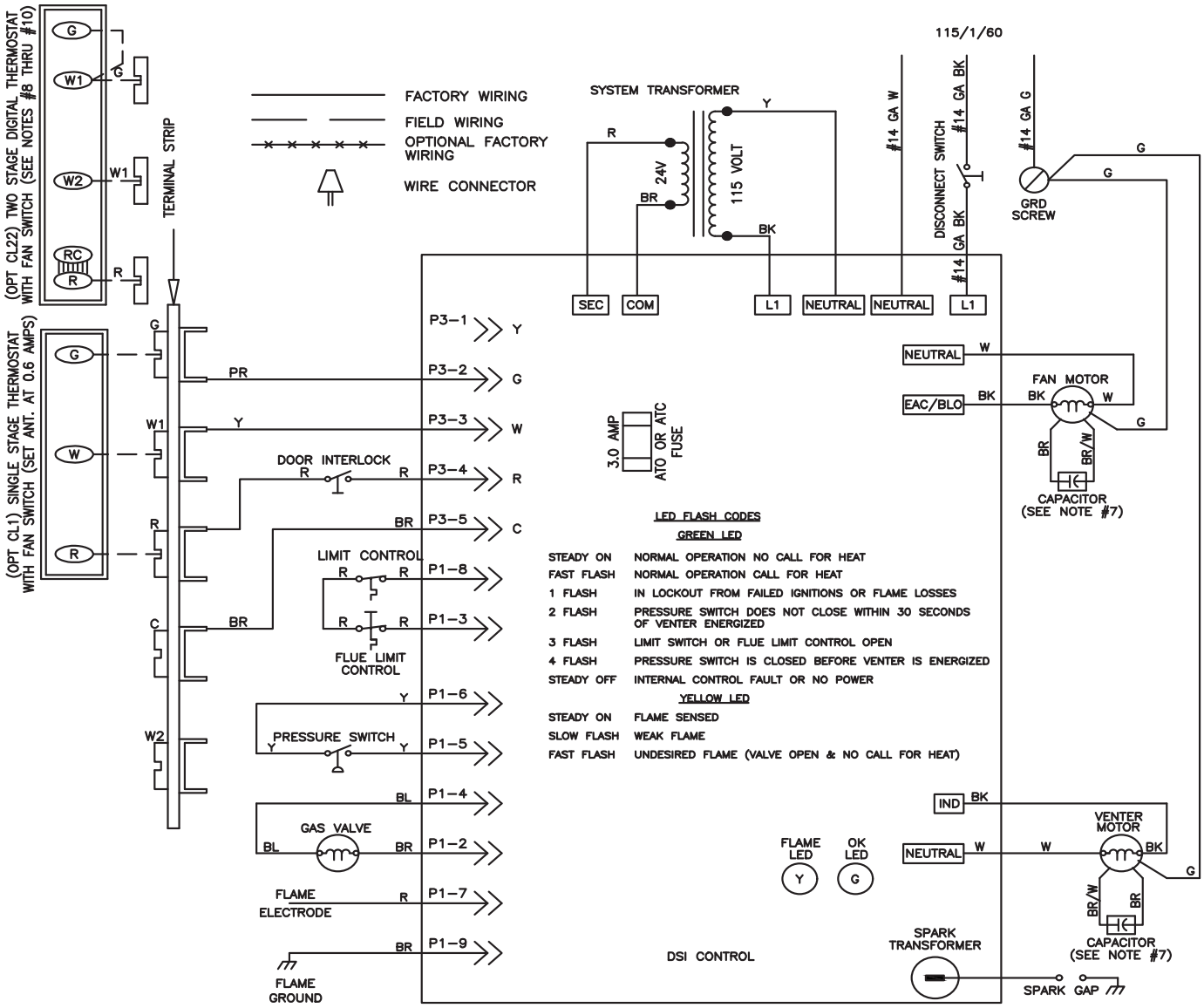


OPERATING SEQUENCE

1. SET THERMOSTAT AT LOWEST SETTING, FAN SWITCH AT "AUTO" POSITION.
2. TURN ON MANUAL GAS VALVE.
3. TURN ON POWER TO UNIT.
4. SET THERMOSTAT AT DESIRED SETTING.
5. THERMOSTAT CALLS FOR HEAT, ENERGIZING THE VENTER MOTOR.
6. VENTER PRESSURE SWITCH CLOSES, FIRING UNIT AT FULL RATE.
7. BURNER FLAME IS SENSED, AND IN 30 SECONDS THE BLOWER MOTOR IS ENERGIZED.
8. IF THE FLAME IS EXTINGUISHED DURING MAIN BURNER OPERATION, THE INTEGRATED CONTROL SYSTEM CLOSES THE MAIN VALVE AND MUST BE RESET BY INTERRUPTING POWER TO THE CONTROL CIRCUIT (SEE LIGHTING INSTRUCTIONS).
9. SET FAN SWITCH AT "ON" POSITION FOR CONTINUOUS BLOWER OPERATION.

NOTES

1. THE FOLLOWING CONTROLS ARE FIELD INSTALLED OPTIONS: THERMOSTAT
2. DOTTED WIRING INSTALLED BY OTHERS.
3. CAUTION: IF ANY OF THE ORIGINAL WIRING AS SUPPLIED WITH THE APPLIANCE MUST BE REPLACED, IT MUST BE REPLACED WITH WIRING MATERIAL HAVING A TEMPERATURE RATING OF AT LEAST 105° C. EXCEPT FOR SENSOR LEAD WIRE, FLUE LIMIT CONTROL AND LIMIT WIRING WHICH MUST BE 150° C.
4. LINE AND FAN MOTOR BRANCH WIRE SIZES SHOULD BE OF A SIZE TO PREVENT VOLTAGE DROPS BEYOND 5% OF SUPPLY LINE VOLTAGE.
5. USE #14 GA. WIRE FOR LINE WIRING ON THE UNIT.
6. USE #18 GA. WIRE FOR CONTROL WIRING ON THE UNIT.
7. CAPACITOR IS REMOTE MOUNTED.
8. VERIFY JUMPER ON CL22 THERMOSTAT TERMINALS R TO RC.
9. FAN SWITCH OR LOW STAGE OF CL22 THERMOSTAT ENERGIZES THE BLOWER MOTOR.
10. HIGH STAGE OF CL22 THERMOSTAT INITIATES A CALL FOR HEAT.

FIELD CONTROL WIRING

| TOTAL WIRE LENGTH | DISTANCE FROM UNIT TO CONTROL | MIN. RECOMMENDED WIRE GUAGE |
|---|---|---|
| 150' | 75' | #18 GA. WIRE |
| 250' | 125' | #16 GA. WIRE |
| 350' | 175' | #14 GA. WIRE |

WIRING CODE
BLACK – BK
BROWN – BR
RED – R
ORANGE – O
YELLOW – Y
GREEN – G
BLUE – BL
PURPLE – PR
WHITE – W

UEAS SERIES: AG1
WD# 230300 REV. #4

## 9.0 Controls

### 9.1 Thermostat

If the thermostat has an anticipator setting, make sure it is set to 0.6 amps (or in accordance with the amperage value noted on the wiring diagram of your heater).

Make thermostat connections at the terminal strip on the back of the heater. The strip has four terminals, G, W1, R, and W2; refer to the wiring diagram.

**IMPORTANT: All units MUST be operated by a 24-volt thermostat.** Never use a line voltage disconnect switch as a means of operating the heater.

**Multiple Heater Control, Options CL31 and CL32:** If the heater was ordered with a multiple heater control option, one thermostat can be used to control up to six heaters. The option includes a 40VA transformer that replaces the standard transformer in the "controlling" unit and a relay assembly that attaches to the additional unit. Option CL31 provides for control of two heaters. If control of additional heaters is desired (up to six total), option CL32 which is the relay assembly only must be added to each additional heater.

The option packages are shipped separately and include complete instructions on installation and wiring.

### 9.2 Gas Valve

The main operating gas valve is powered by the 24-volt control circuit through the thermostat and safety controls. The main control valve is a diaphragm type providing regulated gas flow preset at the factory (for location, see **FIGURE 28**, page 37).

**WARNING**

**The operating valve is the prime safety shutoff. All gas supply lines must be free of dirt or scale before connecting the unit to ensure positive closure (refer to Hazard Levels, page 2).**

### 9.3 Safety Controls

#### 9.3.1 Combustion Air Proving (Pressure Switch)

The combustion air proving switch is a pressure sensitive switch that monitors air pressure to ensure that proper combustion airflow is available. The switch senses the differential pressure between the negative pressure in the venter housing and the pressure in the cabinet (for switch location, see **FIGURE 28**, page 37).

On startup when the heater is cold, the sensing pressure is at the most negative level, and as the heater and vent system warm up, the sensing pressure becomes less negative. After the system has reached equilibrium (about 20 minutes), the sensing pressure levels off.

If a restriction or excessive vent length or turns cause the sensing pressure to be outside the switch setpoint, the pressure switch will function to shutoff the main burner. The main burner will remain off until the system has cooled and/or the flue system resistance is reduced.

The table below lists the approximate water column differential pressure readings and switch setpoints for sea level operating conditions.

**Pressure Switch Identification**

| Unit Size | Startup Cold | Equilibrium Hot | Setpoint OFF | Setpoint ON | Label Color | Altitude (Feet) | Switch PN |
|---|---|---|---|---|---|---|---|
| | Differential Pressure Measured (IN WC) | | | | | | |
| 130 | 3.00 | 2.80 | 2.65 | 2.75 | Yellow | 0 to 6,000 | 221251 |
| 180 | 3.10 | 2.80 | 2.30 | 2.91 | Blue | | 221228 |
| 260 | 3.30 | 2.90 | 2.40 | 2.52 | White | | 1013436 |
| 310 | 3.50 | 3.20 | | | | | |
| 130 | 2.95 | 2.75 | 2.60 | 2.65 | Green | 6,001 to 10,000 | 235954 |
| 180 | 3.05 | 2.75 | 2.25 | 2.30 | Orange | | 235953 |
| 260 | 3.25 | 2.85 | | | | | |
| 310 | 3.45 | 3.15 | | | | | |

**DANGER**

**Safe operation of this unit requires proper venting flow. NEVER bypass combustion air proving switch or attempt to operate the unit without the venter running and the proper flow in the vent system. Hazardous conditions could result (refer to Hazard Levels, page 2).**

## 9.0 Controls (Continued)

## 9.3 Safety Controls (Continued)

### 9.3.2 Limit Control

All units are equipped with a temperature activated auto reset limit control. The control is factory-set and is non-adjustable. If the setpoint is reached, the limit control will interrupt the electric supply to the gas valve. This safety device provides protection in the case of motor failure or lack of airflow due to a restriction at the inlet or outlet (for location, see **FIGURE 28**, page 37).

**CAUTION: The auto reset limit control will continue to shut down the heater until the cause is corrected. Never bypass the limit control; hazardous conditions could result (see Hazard Levels, page 2).**

### 9.3.3 Vent Temperature Limiting Switch

This heater is equipped with a temperature activated, manually reset switch to limit the temperature of the vent gases to below 145°F. The switch is attached to the side of the combustion air venter housing. If the setpoint is reached, the switch will interrupt the electric supply to the gas valve. If the vent temperature switch is activated, identify and correct the cause before resetting the switch. Refer to the Maintenance Section for information on probable causes and instructions on resetting the switch.

**DANGER**

**If the manual vent temperature switch activates, identify and correct the cause before resetting the switch. Never bypass the vent temperature switch; hazardous conditions could result (see Hazard Levels, page 2).**

### 9.3.4 Door Switch

All Model UEAS heaters are equipped with a door switch which prevents the heater from operating when the service door panel is open. The service panel has a pliable gasket material that fully seals the door to provide added protection from building air entering the combustion zone of the heater (for switch location, see **FIGURE 28**, page 37).

### 9.3.5 Fan Motor Overload Protection

The fan motor is equipped with thermal overload protection of the automatic reset type. Should the motor refuse to run, it may be because of improper current characteristics. Make certain that the correct voltage is available at the motor.

## 10.0 Ignition System

This heater is equipped with a direct spark integrated control module (circuit board). The module monitors the safety devices and controls the operation of the fan and venter motors and the gas valve between heat cycles.

**FIGURE 25 – DSI Integrated Control Module (Circuit Board)**

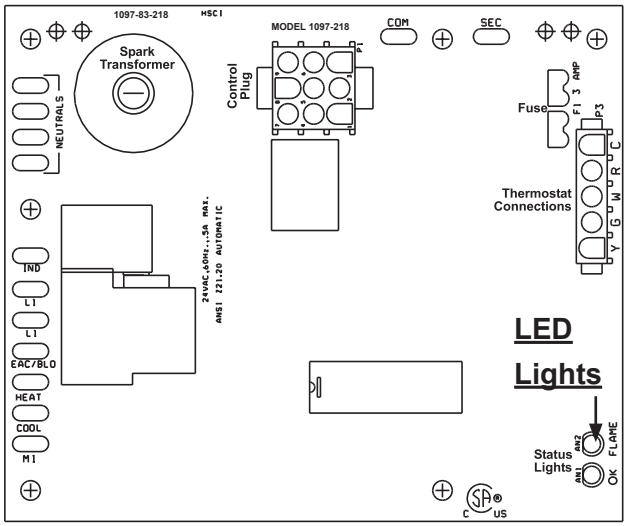


LED lights are visible through a viewport.

**Control Status: Green LED Codes**

Steady ON ..... Normal Operation, No call for heat
Fast Flash ..... Normal Operation, Call for heat
1 Flash ..... System Lockout, Failed to detect or sustain flame
2 Flashes ..... Pressure Switch Did Not Close within 30 Seconds of Venter motor
3 Flashes ..... High Limit or Vent Temperature Limit Switch Open
4 Flashes ..... Pressure switch is closed before venter motor is energized
Steady OFF ..... Blown Fuse, No Power, or Defective Board

**Flame Status: Yellow LED Codes**

Steady ON ..... Flame is sensed
Slow Flash ..... Weak flame (current below 1.0 microamps ±50%)
Fast Flash ..... Undesired Flame (valve open and no call for heat)

## Normal Heat Cycle Operating Sequence

**1) Call for Heat:** The thermostat calls for heat by energizing the “W” terminal. The control checks to see that the limit switches are closed and the pressure switch is open. If one of the limit switches is open, the control responds as defined in the “Abnormal Heat Cycle, Limit Switch Operation”. If the pressure switch is closed, the control will do four flashes on the green LED and wait indefinitely for the pressure switch to open. If the pressure switch is open, the control proceeds to prepurge.

**2) Prepurge:** The control energizes the venter motor and waits for the pressure switch to close. If the pressure switch does not close within 240 seconds of the venter motor energizing, the control will do two flashes on the green LED. The control will leave the venter motor energized indefinitely as long as the call for heat remains and the pressure switch is open.

When the pressure switch is proven closed, the control begins the prepurge time. If flame is present any time while in prepurge, the prepurge time is restarted. If flame is present long enough to cause lockout, the control responds as defined in “Fault Modes, Undesired Flame”.

The control runs the venter motor for a 20 second prepurge time, then proceeds to the ignition trial period.

**3) Ignition Trial Period:** The control energizes the spark and main gas valve. The venter remains energized. If flame is sensed during the first 6 seconds, the spark is deenergized and the control proceeds to heat fan/blower on delay. If flame has not been sensed during the first 6 seconds, the control deenergizes the spark output and keeps the gas valve energized for an additional one second flame proving period. If flame is not present after the flame proving period, the control deenergizes the gas valve and proceeds with ignition retries as specified in “Abnormal Heat Cycle, Ignition Retry”. If flame is present, the control proceeds to the fan/blower on delay.

**4) Fan/Blower On Delay:** The control waits for 30 seconds from the time the gas valve opened and then energizes the fan/blower motor. The gas valve and venter motor remain energized. The control proceeds to steady heat mode.

**5) Steady Heat:** Control inputs are continuously monitored to ensure limit and pressure switches are closed, flame is established, and the thermostat call for heat remains. When the thermostat call for heat is removed, the control deenergizes the gas valve and begins post-purge and fan/blower off delay timing.

**6) Post Purge:** The venter motor output remains on for a 45-second post-purge period after the thermostat is satisfied.

**7) Fan/Blower Off Delay:** The fan/blower motor is deenergized after a blower off delay of 120 seconds.

## Abnormal Heat Cycle Functions

**Interrupted Thermostat Call for Heat:** If the thermostat demand for heat is removed before the flame is recognized, the control will run the venter motor for the post purge period and deenergize all outputs.

If the thermostat demand for heat is removed after successful ignition, the control will deenergize the gas valve, run the venter motor through post purge, and run the fan/blower motor on heat speed for the selected delay off time.

**Ignition Retry:** If flame is not established on the first trial for ignition period, the control deenergizes the gas valve and the venter motor remains energized for an inter-purge period of 20 seconds. The spark and gas valve are then reenergized, and the control initiates another trial for ignition.

If flame is not established on the second trial for ignition, the control deenergizes the gas valve, energizes the fan/blower motor on heat speed, and venter motor remains energized. The fan/blower motor is shut off after 120 seconds. When the fan/blower motor deenergizes, the spark and gas valve are reenergized and the control initiates another trial for ignition. Note that this fan delay is a self-healing feature for an open auxiliary limit switch.

If flame is not established on the third trial for ignition period, the control deenergizes the gas valve, and the venter motor remains energized for an inter-purge period of 20 seconds. The control then reenergizes the gas valve and spark and initiates another trial for ignition.

# 10.0 Ignition System (Continued)

## Abnormal Heat Cycle Functions (Continued)

If flame is not established on the fourth trial for ignition (initial try plus 3 retries), the control deenergizes the gas valve and goes into lockout. The control goes to one flash on the green LED to indicate ignition failure lockout.

**Limit Switch Operation:** The limit switch is ignored unless a call for heat is present (W energized). If the limit switch is open and a call for heat is present, the control deenergizes the gas valve and turns the fan/blower motor on heat speed and runs the venter motor. The control will be in soft lockout and flashing fault code “3" before returning to normal operation.

When the switch recloses or the call for heat is lost, the control runs the venter motor through post purge and runs the blower/fan motor through the selected fan off delay.

**Pressure Switch:** If the pressure switch opens before the trial for ignition period, the venter motor will run through the pressure switch recognition delay (2 seconds), the gas valve will be deenergized, and the venter motor will run through the postpurge time. The control will restart the heat cycle at the pressure switch proving state if the call for heat still exists.

Pressure switch opening for less than 2 seconds during the trial for ignition period shall not interrupt the heat cycle. Note that the gas valve will deenergize while the pressure switch is open.

If the pressure switch opens after a successful ignition, the control will deenergize the gas valve. If flame is lost before the end of the 2 second pressure switch recognition delay, the control will respond to the loss of flame. If the pressure switch remains open for 2 seconds and the flame remains, the control deenergizes the gas valve, the venter motor runs through post-purge, and the fan/blower motor runs on heat speed through the selected fan off delay. When the fan off delay is over, the fan/blower motor is deenergized, and a heat cycle is begun if the call for heat still exists.

## Continuous Fan Operation

When the thermostat calls for continuous fan (G) without a call for heat, the fan motor is energized after a 0.25 second delay. NOTE: This brief on delay is to allow the “G” terminal to energize slightly before “Y” and an external changeover relay to switch from “G” to “W” without causing momentary glitches in the fan/blower output. The fan remains energized as long as the call for fan remains without a call for heat.

If a call for heat (W) occurs during continuous fan, the fan/blower will deenergize.

A call for fan is ignored while in lockout.

## Fault Modes

**Undesired Flame:** If flame is sensed longer than 20 seconds while the gas valve is deenergized, the control shall energize the venter motor and fan/blower motor on heat speed. When flame is no longer sensed, the venter motor will run through postpurge, and the fan/blower motor will run through the selected heat fan off delay time. The control will do a soft lockout, but will still respond to open limit and flame. The FLAME (yellow) LED shall flash rapidly when lockout is due to undesired flame.

**Gas Valve Relay Fault:** If the control senses the gas valve as energized for more than one second when the control is not attempting to energize the gas valve, or the gas valve is sensed as not energized when it is supposed to be energized, then the control will lockout with green LED off. The control assumes either the contacts of the relay driving the gas valve have welded shut, or the sensing circuit has failed. The venter motor is forced off to open the pressure switch to stop gas flow unless flame is present.

If the gas valve was sensed as closed when it should be open, and has not deenergized after the venter motor was shutoff for 15 seconds, then the venter motor is reenergized to vent the unburned gas.

## Lockout

**Soft Lockout:** The control shall not initiate a call for heat or call for continuous fan while in lockout. The control will still respond to an open limit and undesired flame. Lockout shall automatically reset after one hour. Lockout may be manually reset by removing power from the control for more than one second or removing the thermostat call for heat for more than one and less than 20 seconds.

**Hard Lockout:** If the control detects a fault on the control board, the status LED will be deenergized, and the control will lockout as long as the fault remains. A hard lockout will automatically reset if the hardware fault clears.

**Power Interruption:** During a momentary power interruption or at voltage levels below the minimum operating voltage (line voltage or low voltage) the system will self-recover without lockout when voltage returns to the operating range.

Power interruptions of less than 80mS shall not cause the control to change operating states. Power interruptions greater than 80mS may cause the control to interrupt the current operating cycle and restart.

# 11.0 Commissioning and Startup

## 11.1 Check the Installation Prior to Startup

- ☐ Check to be sure that all screws used to hold shipping brackets were reinstalled in the heater cabinet.
- ☐ If installed in California, verify that the California Warning Label is displayed.
- ☐ Check suspension. Unit must be secure and level.
- ☐ Check clearances (requirements are in Paragraph 4.1).
- ☐ Check piping for leaks and proper gas line pressure. Bleed gas lines of trapped air (refer to Paragraph 7.1).
- ☐ Check vent system to be sure that it is installed according to the instructions in Paragraph 7.2.
- ☐ Check condensate drain system to be sure that it is installed according to the instructions in Paragraph 7.3
- ☐ Check electrical wiring. Be sure all wire gauges are as recommended. A service disconnect switch should be used. Verify that fusing or circuit breakers are adequate for the load use.
- ☐ Check polarity. Verify that line voltage exists between the black “L1” and earth ground.

## 11.2 Heater Startup

**WARNINGS**

**For your safety, read before operating. If you do not follow these instructions exactly, a fire or explosion may result causing property damage, personal injury, or loss of life.**

- **This appliance does not have a pilot. It is equipped with an ignition device which automatically lights the burner. Do not try to light the burner by hand.**
- **Before operating, smell all around the appliance area for gas. Be sure to smell next to the floor because some gas is heavier than air and will settle on the floor.**

  **WHAT TO DO IF YOU SMELL GAS**
  - **Do not try to light any appliance.**
  - **Do not touch any electrical switch; do not use any phone in your building.**
  - **Leave the building immediately.**
  - **Immediately call your gas supplier from a phone remote from the building. Follow the gas supplier’s instructions.**
  - **If you cannot reach your gas supplier, call your fire department.**
- **Use only your hand to turn the gas control ON/OFF knob on the gas valve. Never use tools. If the valve ON/OFF knob will not turn by hand, do not try to repair it. Call a qualified service technician. Force or attempted repair may result in a fire or explosion.**
- **Should overheating occur, or the gas supply fail to shut off, turn off the manual gas valve to the appliance before shutting off the electrical supply.**
- **Do not use this appliance if any part has been under water. Immediately call a qualified service technician to inspect the appliance and to replace any part of the control system and any gas control which has been under water.**

## 11.0 Commissioning and Startup (Continued)

## 11.2 Heater Startup (Continued)

### FIGURE 26. Gas Valve

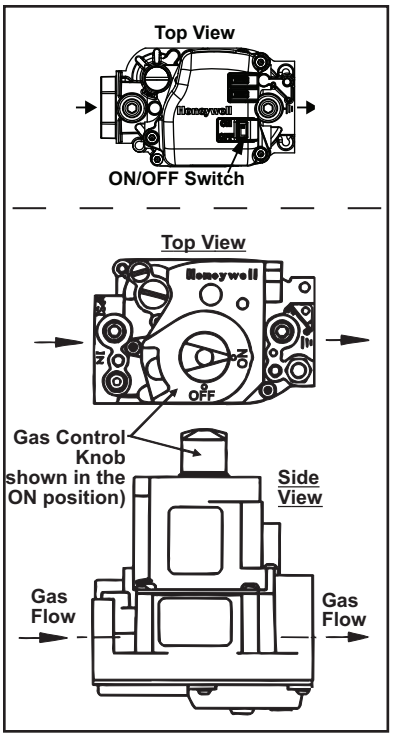


### Operating Instructions and Operating Sequence

1. Set thermostat at lowest setting.
2. Turn off all electric power to the appliance.
3. This appliance is equipped with an ignition device which automatically lights the burner. Do not try to light the burner by hand. Open the access door and locate the gas control (ON/OFF) switch or knob on the gas valve (see **FIGURE 26**).
4. Turn the gas control switch to “OFF” or the knob clockwise to “OFF”.
5. Wait five (5) minutes to clear out any gas. Then smell for gas, including near the floor. **If you smell gas, STOP!** and follow the steps in the **WARNINGS** printed above or on the Operating Label on the heater. If you do not smell gas, proceed to the next step.
6. Turn the gas control switch to “ON” or the knob counterclockwise to “ON”.
7. Close the access door.
8. Turn on the electric power to the heater.
9. Set the thermostat to the desired setting.

**NOTE:** If the appliance does not operate, follow the instructions “To Turn Off Gas to Appliance” printed below (and on the Operating Label on the heater) and call your service technician.

10. Thermostat calls for heat, energizing the venter motor.
11. Venter pressure switch closes, firing the unit.
12. Burner flame is sensed, and in 30 seconds after the gas valve is energized, the fan motor is energized.
13. If the flame is extinguished during the main burner operation, the integrated control system closes the main valve and must be reset by interrupting power to the control circuit (refer to lighting instructions on heater).

| | |
|---|---|
| **TO TURN OFF GAS TO THE APPLIANCE** | 1) Set thermostat to lowest setting<br>2) If service is to be performed, turn off all electric power to the appliance.<br>3) Open the access door.<br>4) Turn the gas control switch “OFF” or the knob clockwise to “OFF” (Do not force.)<br>5) Close the access door. |

## 11.3 Check Installation After Startup

- □ With the unit in operation, measure valve outlet gas pressure (refer to information and instructions in Paragraph 7.1.3). If operated at high altitude, be sure to adjust outlet gas pressure for altitude.
- □ Turn the unit off and on, pausing two minutes between each cycle. Observe for smooth ignition.
- □ Place the packet of information containing the Limited Warranty, this booklet, and any control or optional information in an accessible location near the heater.

**DANGER:**

**The gas burner in this gas-fired equipment is designed and equipped to provide safe controlled complete combustion. However, if the installation does not permit the burner to receive the proper supply of combustion air, complete combustion may not occur. The result is incomplete combustion which produces carbon monoxide, a poisonous gas that can cause death. Safe operation of indirect-fired gas burning equipment requires a properly operating vent system that vents all flue products to the outside atmosphere. FAILURE TO PROVIDE PROPER VENTING WILL RESULT IN A HEALTH HAZARD WHICH COULD CAUSE SERIOUS PERSONAL INJURY OR DEATH.**

**Always comply with the combustion air requirements in the installation codes. Combustion air at the burner should be regulated only by manufacturer-provided equipment. NEVER RESTRICT OR OTHERWISE ALTER THE SUPPLY OF COMBUSTION AIR TO ANY HEATER. MAINTAIN THE VENT/COMBUSTION AIR SYSTEM IN STRUCTURALLY SOUND AND PROPER OPERATING CONDITION.**

## 12.0 Maintenance and Service

**WARNING**

**If you turn off the power supply, turn off the gas (refer to Hazard Levels, page 2).**

The material contained in the MAINTENANCE AND SERVICE Section of this manual is designed to aid a qualified service person in maintaining and servicing this equipment. This heater will operate with a minimum of maintenance. To ensure long life and satisfactory performance, a heater that is operated under normal conditions should be inspected and cleaned at the start of each heating season. If the heater is operating in an area where an unusual amount of dust or soot or other impurities are present in the air, more frequent maintenance is recommended.

When any service is completed, be careful to reassemble correctly to ensure that no unsafe conditions are created. When relighting, always follow the lighting instructions on the heater.

## 12.1 Maintenance Schedule

The following procedures should be carried out at least annually (see **FIGURE 28, page 37,** and Paragraphs 12.2.1 through 12.2.16):

- Clean all dirt, lint, and grease from the combustion air opening and venter assembly.
- Clean all dirt, lint, and grease from the fan blade, fan guard, and motor.
- Clean the condensate traps.
- Check the heat exchanger both internally and externally.
- Check the burner for scale, dust, or lint accumulation. Clean if needed.
- Check gas valve to ensure that gas flow is being shutoff completely.
- Check the vent/combustion air system for soundness. Clean openings. Replace any parts that do not appear sound.
- Check the wiring for any damaged wire. Replace damaged wiring (refer to Paragraph 8 for replacement wiring requirements).

**NOTE**: If replacement parts are required, use only factory-authorized parts.

## 12.2 Maintenance Procedures

### 12.2.1 Heat Exchanger Maintenance

This heater has a TCORE3 ® heat exchanger (patent pending).
Remove any external dirt or dust accumulation. Visually check the heat exchanger for cracks and holes. If a crack or hole is observed, replace the heat exchanger. A TCORE3 ® heat exchanger has a primary and a secondary heat exchanger; check both sections.

**NOTE:** Inspection of the lower portion of the heat exchanger is done with the burner removed. Refer to the Burner Service section below for information on inspecting the lower portion of the heat exchanger.

### 12.2.2 Burner Maintenance

This heater is equipped with a TCORE2® burner.

Inspect the burner/control compartment annually to determine if cleaning is necessary. If there is an accumulation of dirt, dust, and/or lint, clean the compartment and follow the instructions below to remove and clean the burner.

**CAUTION: Use of eye protection is recommended.**

**Burner Removal Instructions (See FIGURE 27)**

1. Outside the cabinet, shut the gas supply off at the manual valve ahead of the union.
2. Turn off electric supply.
3. Disconnect the gas supply at the union outside of the cabinet.
4. Remove the access panel.

## 12.0 Maintenance and Service (Continued)

## 12.2 Maintenance Procedures (Continued)

### 12.2.2 Burner Maintenance (Continued)

### Burner Removal Instructions (Continued)

5. **Disconnect and Move the Gas Train:** At the gas valve, mark and disconnect the wires. Carefully remove the burner orifice and orifice adapter locking nut. Slide the orifice adapter out through the bracket on the burner pushing the gas train to the right. This will move the gas train out of the way.
6. **Remove Secondary Air Baffles:** Vertical along the right side of the burner, locate the flat plate(s) identified as the secondary air baffle(s). The quantity of baffles could be one to four depending on heater size. Each baffle is held in place by one screw. **For reassembly, on the secondary air shield, mark the location (top and bottom) of each baffle.** Remove all baffles.
7. **Remove Burner Assembly:**

   **a)** Locate the burner body supports. Depending on the size, the burner will have two or more supports. At each support, remove the one screw that attaches it to the secondary air shield

   **b)** Holding the venturi tube, slide the entire burner assembly slightly to the right to disengage the burner from the supports on the left. Then rotate the open end of the venturi tube inward toward the heater. Carefully pull the burner assembly out of the cabinet.

**FIGURE 27. Burner Removal**

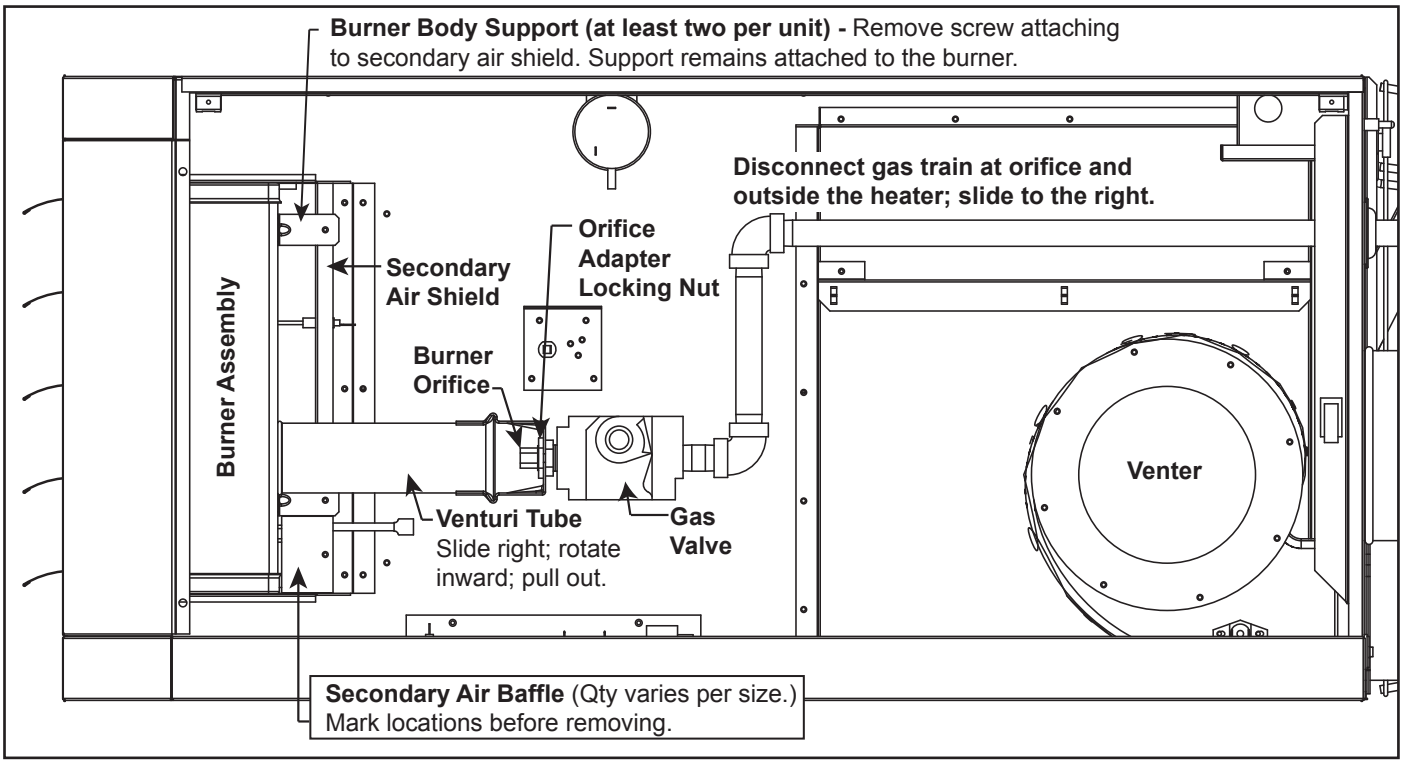


### Inspect and Clean the Burner

With the burner assembly removed, shine a flashlight on the burner ribbons. Look for carbon buildup, scale, dust, lint, and/or anything that might restrict flow through the spaces between the burner ribbons. Holding the burner assembly so that any foreign material will fall away from the burner, use a stiff bristle brush to loosen and remove any foreign material(s). If the burner is excessively dirty, remove one of the burner end caps. Remove the four screws that hold the end cap to the burner housing. Lightly tap the end cap to remove it.

Clean all foreign material from the burner and venturi. After the burner is thoroughly clean, replace the end cap making certain that it is tight against the burner housing. **NOTE:** If any of the burner components are damaged or deteriorated, replace the burner assembly.

### Inspect the Lower Portion of the Heat Exchanger (with burner assembly removed)

At the burner flame entrance of each tube, shine a bright light into each heat exchanger section. With the light shining into the heat exchanger, observe the outside for visible light. Repeat this procedure with each heat exchanger section. If any light is observed, replace the heat exchanger.

## Reinstall the Burner

### Instructions to Reinstall the Burner (Refer to FIGURE 27)

1. **Attach the Burner Assembly:** Holding the venturi tube, slide the entire burner assembly into position. Align the supports on the left side with the slots in the burner shield; sliding the supports into the slots. On the right, reattach each burner body support to the secondary air shield.
2. **Attach the Secondary Air Baffles:** Reattach the secondary air baffles as marked. Baffles may be different sizes and each **must** be attached in the correct location.
3. **Attach the Control Assembly:** Carefully slide the control assembly into position. Reattach with the same screws. Check to be sure all wire connections are secure.
4. **Attach the Gas Train:** Slide the gas train so that the orifice adapter is through the bracket. Fasten the gas train to the bracket with the locking nut. Install the gas orifice. Reconnect the wires to the gas valve.
5. **Close the access panel.**
6. **Reconnect the gas supply** at the union outside of the cabinet. Leak test the connection with leak detecting solution.
7. **Turn on the electric and the gas. Check for proper operation**.

## 12.2.3 Burner Orifice

Burner orifice usually only needs to be replaced when installing a gas conversion kit. If ordering a replacement orifice only, give BTUh content and specific gravity of gas, as well as the model and serial number of the unit. When removing or replacing the burner orifice, be careful not to damage the venturi tube and/or the bracket.

**FIGURE 28. Location of Controls**

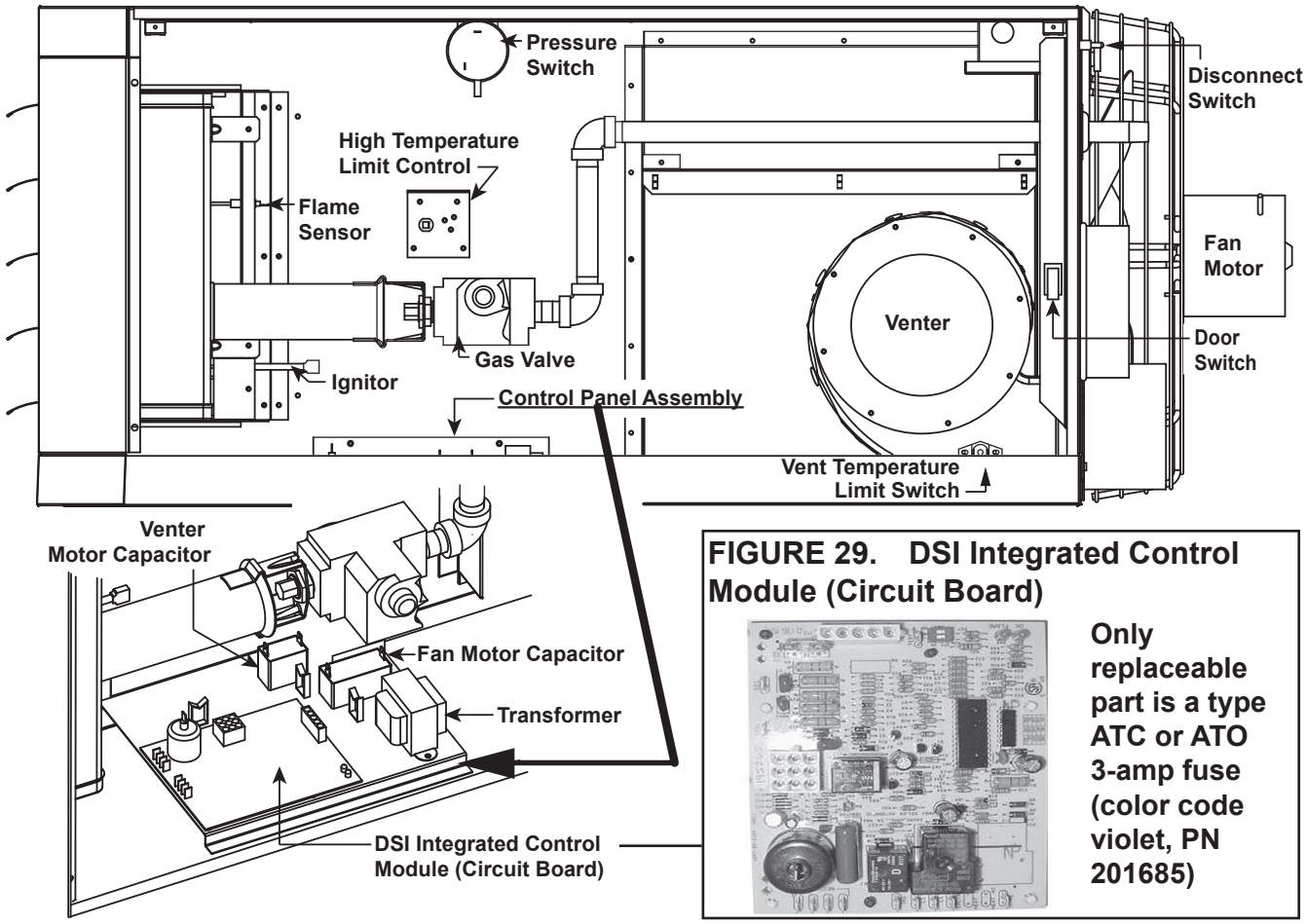


**FIGURE 29. DSI Integrated Control Module (Circuit Board)**



**Only replaceable part is a type ATC or ATO 3-amp fuse (color code violet, PN 201685)**

## 12.2.4. Ignition System

**DSI Integrated Control Module (circuit board, see FIGURE 29):** The module monitors the operation of the heater including ignition. The only replaceable component is the 3 amp Type ATC or ATO fuse. If the fuse is blown, the problem is most likely an external overload. Correct the problem and replace the fuse.

# 12.0 Maintenance and Service (Continued)

## 12.2 Maintenance Procedures (Continued)

Ignitor

### 12.2.4. Ignition System (Continued)

Do not attempt to disassemble the control module. However, each heating season check the lead wires for insulation deterioration and good connections.

Proper operation of the direct spark ignition system requires a minimum flame signal of 1.0 microamps as measured by a microampmeter.

**NOTE:** For additional information and check out procedure on the direct spark ignition system, refer to Paragraph 10 and the Troubleshooting Flow Chart in Paragraph 12.3.

**Ignitor:** Refer to **FIGURE 28** and locate the ignitor. Disconnect the wire; remove the screw and the ignitor. Clean the ignitor assembly with an emery cloth.

Spark gap must be maintained to 1/8" (see **FIGURE 30**).

**IMPORTANT:** When reassembling, the brown ground wire must remain attached to the ignitor.

**CAUTION: Due to high voltage on the spark wire and electrode, do not touch when energized (refer to Hazard Levels, page 2).**

**FIGURE 30. Ignitor showing required Spark Gap Measurement**

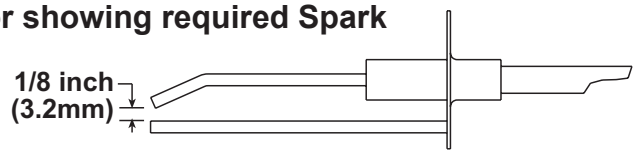

Flame Sensor

**Flame Sensor:** Refer to **FIGURE 28** and locate the flame sensor. Disconnect the wire; remove the screw and the flame sensor. Clean with an emery cloth.

### 12.2.5 Fan Motor, Fan Blades, and Guard

**FIGURE 31. Fan Blade Position on Shaft**

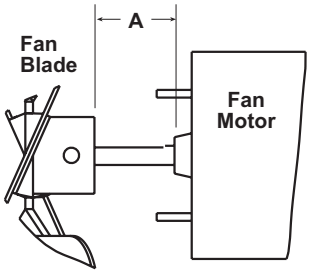


**Dimension A**

| Size | inches | mm |
|---|---|---|
| **130, 180** | 1-5/8 | 67 |
| **260** | 2 | 51 |
| **310** | 1-7/8 | 48 |

Remove dirt and grease from the motor, the fan guard, and blades. Use care when cleaning the fan blades to prevent causing misalignment or imbalance. Check that the hub of the fan blades is secure to the shaft.

Follow these instructions for replacement of the fan guard, fan motor and/or fan blades.

1. If the heater is installed, turn off the gas and disconnect the electric power.
2. Open the access door and disconnect the fan motor wires, capacitor wires at the capacitor, and ground screw.
3. Remove the assembled parts (the fan guard, the motor and the fan blade).
4. Disassemble and replace whatever parts are needed and reassemble using whatever part(s) are being replaced and the original parts. Be sure the fan blade is in the proper position on the shaft; refer to the illustration and table in **FIGURE 31.**

   Position the assembly on the heater. Attach the fan guard.

   Rotate the fan blade to check for adequate clearance. If adjustment is required, loosen the mounting screws, reposition the fan guard, and tighten the screws. Rotate the fan blade and recheck for adequate clearance. Repeat this procedure until the assembly is positioned properly.
5. Reconnect the fan motor wires according to the wiring diagram and close the access panel.
6. Restore power to the heater and turn on the gas. Light, following the instructions on the lighting instruction plate. Check for proper operation.

### 12.2.6 Venter Motor, Wheel, and Pressure Sensing Tap

Remove dirt and grease from the motor casing, the venter housing, pressure sensing tap, and the venter wheel. Venter motor bearings are permanently lubricated. Follow these instructions for replacement of the venter motor and wheel assembly. Keep all hardware removed to be used in reassembling and installing the replacement parts.

**Replacement Instructions**

1. Turn off the gas and disconnect the electric power.
2. Open the burner/control compartment access panel.

3. Disconnect the three venter motor wires at the DSI control, capacitor wires at the capacitor (if applicable), and ground screw (located on the control panel).
4. Holding the venter motor, remove the six screws that attach the venter motor mounting plate to the venter housing. Remove the motor and wheel assembly from the heater.
5. Reassemble with the replacement venter motor and wheel assembly (see **FIGURE 32**). If the motor plate gasket is damaged, it must be replaced.
6. Follow the wiring diagram to connect the venter wires.
7. Replace the access panel. Restore power to the heater and turn on the gas. Light, following the instructions on the lighting instruction plate. Check for proper operation.

**FIGURE 32. Venter Wheel Position on Shaft**

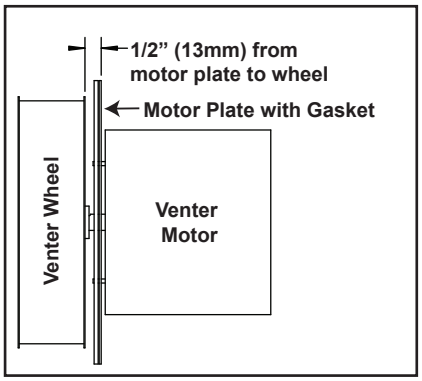


### 12.2.7 Operating Gas Valve

**WARNING**

**The operating valve is the prime safety shutoff. To ensure positive closure, clean all dirt and scale from gas supply lines before connecting to the unit (refer to Hazard Levels, page 2).**

**FIGURE 33. Pressure Tap for Checking Gas Flow Shutoff**

**NOTE:** Operational pressure settings and instructions for checking pressure settings are in Paragraph 7.1.3.

Carefully remove external dirt accumulation and check wiring connections.

The combination gas valve must be checked annually to ensure that the valve is shutting off gas flow completely.

**Instructions:**

1) Locate the 1/8" NPT pressure tap on the combination valve.
2) With the manual valve turned off to prevent flow to the gas valve, connect a manometer to the 1/8" outlet pressure tap in the valve. **NOTE**: A manometer (fluid-filled gauge) is recommended.
3) Turn the manual valve to the ON position and the heater OFF. Use your finger to fully block the main burner orifice for several seconds. Observe the manometer with the orifice blocked, and if any pressure is indicated, the gas valve is leaking. **A leaking gas valve must be replaced before the heater is put back in operation**.

**Top Views of Two Styles of Valves Used on UEAS Units**

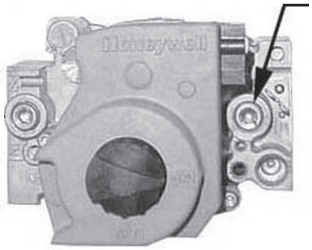


**Pressure Switch**

**Limit Control**

**Door Switch**

**Transformer**

### 12.2.8 Combustion Air Pressure Switch

See **FIGURE 28**, page 37, for location. If it is determined that the pressure switch needs replacing, use only the factory-authorized replacement part that is designed for the model and size of heater being serviced.

### 12.2.9 Limit Control

If it is determined that the limit control needs replacing, use only a factory-authorized replacement part that is designed for the size of heater.

For approximate limit location, see **FIGURE 28**, page 37.

### 12.2.10 Door Switch

If it is determined that the door switch needs replacing, use only a factory-authorized replacement part that is designed for the heater.

### 12.2.11 Transformer

Use a voltmeter to verify that there are 24 volts output from the transformer. If the transformer is not functioning, it must be replaced. Use a replacement transformer identical to the factory-installed model.

# 12.0 Maintenance and Service (Continued)

**For location of controls, see FIGURE 28, page 37.**

**Vent Temperature Limit Switch**

**Disconnect Switch**

# 12.2 Maintenance Procedures (Continued)

## 12.2.12 Vent Temperature Limit Switch

The vent temperature limit switch is located on the discharge of the combustion air blower (venter) and its purpose is to prevent the vent gas temperature from exceeding a temperature that will harm the PVC vent pipe. If the vent temperature limit switch is activated, the cause must be determined and corrected before the heater is placed back into operation. Activation of the manually reset vent temperature limit switch could be caused by one or more of the following:

- Manifold gas pressure too high
- The heat content of the fuel being burned is too high
- Reduced circulating airflow due to dirty an/or plugged air moving components
- Excess dirt on the heat exchangers
- Failed heat exchanger(s)

After the cause is determined and corrected, depress the red button on the switch to reset it.

## 12.2.13 Disconnect Switch

The disconnect switch is located in the sealed electrical box inside the control compartment with the toggle on the rear of the heater.

If it is determined that the disconnect switch needs replacing, use only the factory-authorized replacement part that is designed for the heater. Always replace electrical box cover.

## 12.2.14 Vent/Combustion Air System

Check the complete system at least once a year. Inspection should include all joints, seams, concentric adapter box, inlet air guard or cap, and the vent terminal cap. Clean openings. Replace any defective parts.

## 12.2.15 Condensate Drain System

Check the condensate disposal system annually. Remove the condensate traps and flush them with clear tap water to remove any sediment that my have accumulated. Check to be certain the piping to the sanitary drain has not been damaged. Check the sanitary drain to verify that it flows freely.

# 12.3 Troubleshooting

**IMPORTANT:** When using a multimeter to troubleshoot the 24 volt circuit, place the meter's test leads into the 5 or 9 pin connectors located on the ignition control. Do not remove connectors or terminals from the electrical components. Doing so can result in misinterpreted readings due to the ignition control board's fault mode monitoring circuits.

## Check the Lights on the DSI Integrated Control Module (Circuit Board)

The integrated circuit board monitors the operation of the heater and includes two LED signal lights that indicate normal operation and various abnormal conditions. If the heater fails to operate properly, check this signal to determine the cause and/or to eliminate certain causes. LED is visible through the door (refer to operating sequence in Paragraph 10).

Do not attempt to repair the DSI integrated control module (circuit board); the only field-replaceable component is the fuse.

**Control Status: Green LED Codes**

Steady ON.....Normal Operation, No call for heat
Fast Flash.....Normal Operation, Call for heat
1 Flash.....System Lockout, Failed to detect or sustain flame
2 Flashes.....Pressure Switch Did Not Close within 30 Seconds of Venter Motor
3 Flashes.....High Limit or Vent Temperature Limit Open
4 Flashes.....Pressure Switch is Closed Before Venter Motor is Energized
Steady OFF....Blown fuse, No Power, or Defective Board

**Flame Status: Yellow LED Codes**

Steady ON.....Flame is sensed
Slow Flash.....Weak flame (current below 1.0 microamps ± 50%)
Fast Flash.....Undesired Flame (valve open and no call for heat)

## DSI Integrated Control Module (Circuit Board) Trial Troubleshooting Flowchart

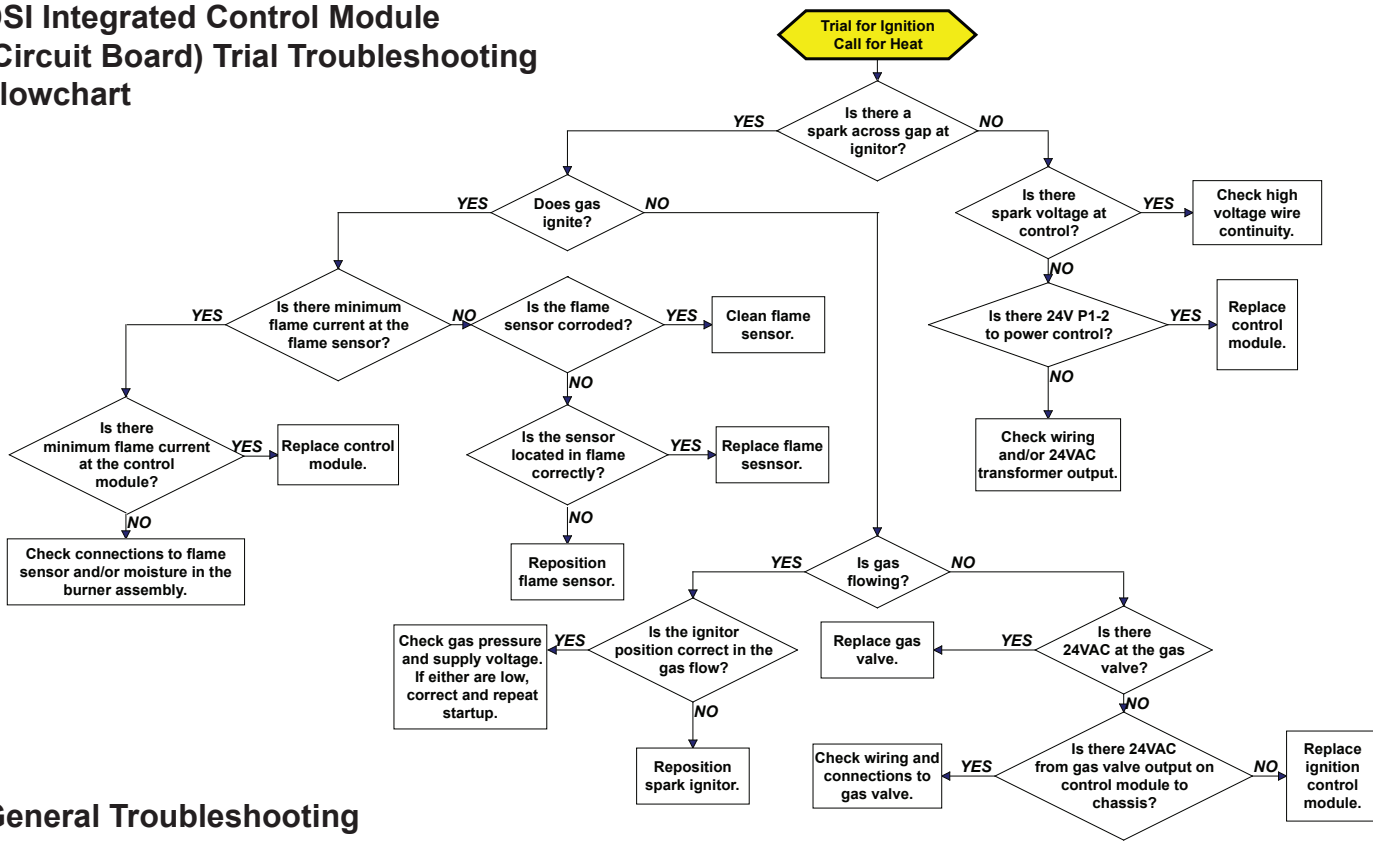


## General Troubleshooting

| Problem | Probable Cause | Remedy |
|---|---|---|
| **Venter motor will not start** | 1. No power to unit | Turn on power; check supply fuses or main circuit breaker |
| | | Turn on built-in disconnect switch; replace switch if not operating |
| | 2. No 24V power to integrated circuit board | Turn up thermostat; check control transformer output |
| | 3. Integrated circuit board fuse blown | Correct cause; replace fuse (type ATC or ATO, 32VDC, 3A) |
| | 4. No power to venter motor | Tighten connections at circuit board and/or motor terminals |
| | 5. Integrated circuit board defective | Replace integrated circuit board |
| | 6. Defective venter motor | Replace venter motor (refer to Paragraph 12.2.6) |
| **Burner will not light** | 1. Manual valve not open | Open manual valve |
| | 2. Air in the gas line | Bleed gas line (initial startup only) |
| | 3. Gas pressure too high or too low | Supply pressure should be 5–14 IN WC for natural gas or 11–14 IN WC for propane |
| | 4. No spark | |
| | a) Loose wire connections | Ensure that all wire connections are solid |
| | b) Transformer failure | Ensure that 24 volts is available |
| | c) Incorrect spark gap | Maintain spark gap at 1/8" (3.2 mm) |
| | d) Spark cable shorted to ground | Replace worn or grounded spark cable |
| | e) Spark electrode shorted to ground | Replace if ceramic spark electrode is cracked or grounded |
| | f) Burner not grounded | Ensure that integrated circuit board is grounded to ignitor |
| | g) Circuit board not grounded | Ensure that integrated circuit board is grounded to furnace chassis |
| | h) Unit not properly grounded | Ensure that unit is properly field-grounded to earth ground and properly phased (L1 to hot lead L2 to neutral) |
| | i) Integrated circuit board fuse blown | Correct cause; replace fuse (type ATC or ATO, 32VDC, 3A) |
| | j) Faulty integrated circuit board | If 24 volt is available to integrated circuit board and all other causes have been eliminated, replace board |
| | 5. Lockout device interrupting control circuit by above causes | Reset lockout by interrupting control at thermostat or main power |
| | 6. Interlock door switch open | Close access door or replace switch |
| | 7. Combustion air proving switch not closing | |
| | a) Unit is not properly vented | Ensure that unit is properly vented |
| | b) Obstructed vent | Remove obstructions from vent |
| | c) Faulty tubing to pressure switch | Replace faulty tubing to pressure switch |
| | 8. Faulty combustion air proving switch | Replace combustion air proving switch |
| | 9. Main valve not operating | |
| | a) Defective valve | If 24 volt is measured at valve connections and valve remains closed, replace valve |
| | b) Loose wire connections | Check and tighten all wiring connections |

## 12.3 Troubleshooting (Continued)
### General Troubleshooting (Continued)

| Problem | Probable Cause | Remedy |
|---|---|---|
| **Burner will not light (continued)** | 10. Integrated circuit board does not power main valve | |
| | a) Loose wire connections | Check and tighten all wiring connections |
| | b) Flame sensor grounded | Ensure that flame sensor lead is not grounded or that insulation or ceramic is not cracked; replace as required |
| | c) Incorrect gas pressure | Supply pressure should be 5–14 IN WC for natural gas or 11–14 IN WC for propane |
| | d) Cracked ceramic at sensor | Replace sensor |
| | 11. Faulty time delay relay (applies to units manufactured *before* DEC 2012) | Replace time delay relay |
| **Burner cycle on and off** | 1. Gas pressure too high or too low | Supply pressure should be 5–14 IN WC for natural gas or 5–14 IN WC for propane |
| | 2. Burner not grounded | Ensure that integrated circuit board is grounded to ignitor |
| | 3. Circuit board not grounded | Ensure that integrated circuit board is grounded to furnace chassis |
| | 4. Faulty integrated circuit board | If 24 volt is available to integrated circuit board and all other causes have been eliminated, replace board |
| | 5. Combustion air proving switch not closing | |
| | a) Unit is not properly vented | Ensure that unit is properly vented |
| | b) Obstructed vent | Remove obstructions from vent |
| | c) Faulty tubing to pressure switch | Replace faulty tubing to pressure switch |
| | 6. Faulty combustion air proving switch | Replace combustion air proving switch |
| | 7. Flame sensor grounded | Ensure that flame sensor lead is not grounded or that insulation or ceramic is not cracked; replace as required |
| | 8. Cracked ceramic at sensor | Replace sensor |
| | 9. Incorrect polarity | Reverse line volt leads to integrated circuit board |
| | 10. Pin terminal loose on 9-pin plug | Replace wire harness |
| **No heat (heater operating)** | 1. Incorrect valve outlet pressure or orifice | Check valve outlet pressure (refer to rating plate for manifold pressure) |
| | 2. Cycling on limit control | Check air throughput |
| | 3. Improper thermostat location or adjustment | Refer to thermostat manufacturer's instructions |
| **Fan or venter motor will not run** | 1. Circuit open | Check wiring and connections |
| | 2. Defective integrated circuit board | Replace board |
| | 3. Defective motor | Replace motor |
| **Fan or venter motor turns on and off while burner is operating** | 1. Motor overload device cycling on and off | Check motor load against motor rating plate; Replace motor if needed |
| **Fan or venter motor cuts out on overload** | 1. Low or high voltage supply | Correct electric supply |
| | 2. Defective motor | Replace motor |
| | 3. Poor airflow | Clean motor, fan, and fan guard |

# APPENDIX

[A] CSA ratings for altitudes to 2000 feet.

[B] Size shown is for gas connection to a single-stage gas valve, not supply line size.

[C] MOCP = 2.25 × (largest motor FLA) + smallest motor FLA. Answer is rounded to the nearest available standard circuit breaker size.

[D] Except where indicated, information in this table is based on a heater equipped with a standard 115 volt open fan motor.

**TECHNICAL DATA**

| | Unit Size | 130 | 180 | 260 | 310 |
|---|---|---|---|---|---|
| Input Heating Capacity | BTUh | 131,000 | 175,000 | 260,000 | 305,000 |
| | kW | 38.4 | 51.2 | 76.1 | 89.3 |
| Thermal Efficiency (%) | | 93 | 91 | 92 | 91 |
| Output Heating Capacity [A] | BTUh | 121,830 | 159,250 | 239,200 | 277,550 |
| | kW | 35.7 | 46.6 | 70.0 | 81.3 |
| Gas Connection (inches) [B] | Natural or Propane | 1/2 | 1/2 | 3/4 | 3/4 |
| Vent Connection Diameter (inches) | | 4 | 4 | 4 | 4 |
| Combustion Air Inlet Diameter (inches) | | 6 | 6 | 6 | 6 |
| Control Amps (24 volt) | | 1.0 | 1.0 | 1.0 | 1.0 |
| Full Load Amps (115 volt) | | 6.3 | 6.3 | 10.0 | 10.0 |
| Maximum Over Current Protection [C D] | Standard 115V | 15 | 15 | 20 | 20 |
| Normal Power Consumption (watts) | | 657 | 657 | 1020 | 1020 |
| Discharge Air Temperature Rise (°F) | | 50 | 60 | 50 | 60 |
| Air Volume | cfm | 2256 | 2458 | 4430 | 4283 |
| | $M^3$/Minute | 63.9 | 69.6 | 125.4 | 121.3 |
| Discharge Air Opening Area | $ft^2$ | 2.6 | 2.6 | 4.8 | 4.8 |
| | $M^2$ | 0.2 | 0.2 | 0.5 | 0.5 |
| Outlet Velocity | fpm | 883 | 962 | 924 | 894 |
| | M/Minute | 269 | 293 | 282 | 272 |
| Fan Motor HP [D] | Standard Open | 1/4 | 1/4 | 1/2 | 1/2 |
| | Optional Enclosed | 1/4 | 1/4 | 1/2 | 1/2 |
| Fan Motor rpm | | 1050 | 1050 | 1050 | 1050 |
| Fan Diameter (inches) | | 18 | 18 | 24 | 24 |
| Approximate Condensate per Hour | Gallons | 1 | 1 | 2 | 2 |
| | Liters | 4 | 4 | 8 | 8 |

## Operating Principle showing Combustion Airflow and Supply Airflow

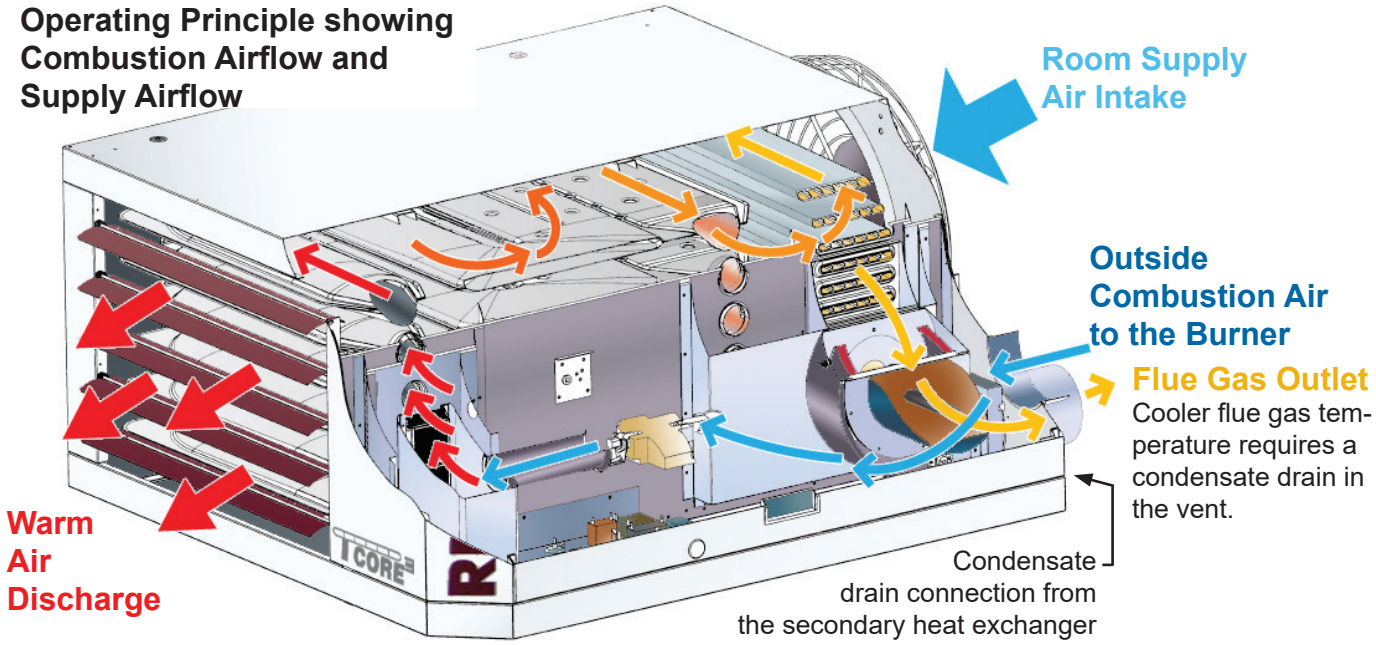


This unit heater is a high efficiency appliance designed to extract part of the latent heat from the products of combustion. This process forms condensation which is collected and directed to a drainage point inside the unit. The heater is equipped with a 1/2" (12.7 mm) PVC pipe for connecting to a condensate drain. The water condensed from the products of combustion will be acidic. The level of concentration is dependent upon the environment where the appliance is installed and may be as high as 6 pH. DO NOT USE COPPER OR COPPER BASED ALLOYS FOR CONDENSATE DRAINS.

# INDEX


**A**

Abnormal Heat Cycle Functions 31

**B**

Burner Maintenance 35, 36
Burner Orifice 37
Burner Removal Instructions 35, 36

**C**

California Warning Label 4
Check Installation After Startup 34
Check the Installation Prior to Startup 33
Clearance 16
Clearances 7
Combustion Air Inlet 12
Combustion Air Inlet Pipe 12
Combustion Air Pipe Support 16
Combustion Air Pressure Switch 39
Combustion Air Proving (Pressure Switch) 29
Concentric Adapter Box Connections 17
Concentric Adapter Box Dimensions 16, 17
Condensate Drain 25, 26
Condensate Drain System 40
Condensate Drain Traps 25
Continuous Fan Operation 32
Location of Controls 37
Control Wiring 27
Conversion Instructions 11
Converting to Propane 11, 12

**D**

Derate by Valve Outlet Pressure 10
Dimensions 6
Disconnect Switch 40
Door Switch 30, 39
Downturn Nozzle 6
DSI Integrated Control Module 30, 37, 41

**E**

Electrical Supply 26

**F**

Fan/Blower OFF Delay Settings 30
Fan Blades 38
Fan Motor 38
Fault Modes 32
Flame Sensor 38

**G**

Gas Connections 8
Gas Supply 8
Gas Valve 29, 34, 39

**H**

Hanging the Heater 7
HAZARD INTENSITY LEVELS 2
Hazards of Chlorine 5
Normal Heat Cycle Operating Sequence 31
Heat Exchanger Maintenance 35
High Altitude 7
High-Altitude Capacity 11
High-Altitude Derate 10
Horizontal Vent/Combustion Air Kit Option CC6 18
Horizontal Vent/Combustion Air Terminal (Option CC6) 20

**I**

Ignition System 30, 37, 38
Ignitor 38
Installation Codes 3, 4

**J**

Joints 14

**L**

LED Codes 40
Length 14
Limit Control 30, 39
Heater Location 4
Lockout 32

**M**

Maintenance Schedule 35
Massachusetts Requirement 4
Motor Overload Protection 30

**O**

Operating Instructions 34
Operating Principle 43
Operating Sequence 34
Option CL31 29
Option CL32 29

**P**

Type of Pipe 12
Pipe Diameter 14
Pressure Sensing Tap 38
Pressure Setting 9
Pressure Switch Identification 29

**S**

Special Installations 3
Startup 33
Swivel Connectors 7

**T**

Terminal Strip 27
Thermostat 29
Heater Throw 4
Transformer 39
Troubleshooting 40

**U**

Uncrating 5, 6

**V**

Valve Outlet Pressure 9
Valve Outlet Pressure Settings by Elevation 10
Vent/Combustion Air System 40
Venter Motor 38
Venter Outlet 12
Vent Pipe 12
Vent Pipe Support 15
Vent Temperature Limiting Switch 30
Vent Temperature Limit Switch 40
Vertical Vent/Combustion Air Kit Option CC2 22
Vertical Vent/Combustion Air Terminal (Option CC2) 24

**W**

Warranty 3
Wiring Diagram 28

## INSTALLATION RECORD (TO BE COMPLETED BY INSTALLER)

| Model | Serial No. | Date of Installation | Notes |
|---|---|---|---|
| | | | |
| | Installer | Distributor | |
| Name | | | |
| Company | | | |
| Address | | | |
| | | | |
| Phone No. | | | |

## For more information on Reznor HVAC products:

- **Contact your local Reznor representative at 1-800-695-1901**
- **Refer to the technical specifications, manuals, and consumer materials found at www.reznorhvac.com**

Intertek

Specifications and illustrations subject to change without notice or incurring obligations.
Latest version of this manual is available at **www.reznorhvac.com**.
©2026 Reznor LLC, Saint Charles, MO. All rights reserved.
**UEAS-IOM (05-26) 221232-A**