REZNOR®

Revision: CAUA-IOM (10-26) 164771-K

Supersedes: CAUA-IOM (08-25) 164771-J

GAS-FIRED INDOOR UPFLOW AIR HANDLER INSTALLATION, OPERATION, AND MAINTENANCE

MODEL CAUA

⚠ DANGER ⚠

FIRE OR EXPLOSION HAZARD

- **Failure to follow safety warnings exactly could result in serious injury, death, or property damage.**
- **Improper installation, adjustment, alteration, service, or maintenance can cause serious injury, death, or property damage.**
- **Installation and service must be performed by a qualified installer, service agency, or the gas supplier.**
- **Be sure to read and understand the installation, operation, and service instructions in this manual.**
- **Do not store or use gasoline or other flammable vapors and liquids in the vicinity of this or any other appliance.**

WHAT TO DO IF YOU SMELL GAS

- **Do not try to light any appliance.**
- **Do not touch any electrical switch; do not use any phone in your building.**
- **Leave the building immediately.**
- **Immediately call your gas supplier from a phone remote from the building. Follow the gas supplier's instructions.**
- **If you cannot reach your gas supplier, call the fire department.**

DO NOT DESTROY. PLEASE READ CAREFULLY. KEEP IN A SAFE PLACE FOR FUTURE REFERENCE.

TABLE OF CONTENTS

GENERAL INFORMATION . . . 4
Important Safety Information . . . 4
Certification . . . 5
Installation Codes . . . 5
Warranty . . . 5
Unit Location . . . 5
Dimensions . . . 6
Weights . . . 7
Clearances . . . 7
Halogenated Hydrocarbons . . . 7
INSTALLATION . . . 8
Unpacking and Inspection . . . 8
Pre-Installation Checklist . . . 8
Positioning and Mounting . . . 8
Piping Connections . . . 9
Gas Supply Pressure . . . 9
Gas Supply Piping . . . 9
Supply Piping Connections . . . 10
Flue Wrapper Condensate Drain Installation . . . 10
Electrical Connections . . . 11
Supply Wiring Connection . . . 11
Control Wiring Connections . . . 12
Duct Connections . . . 12
Requirements and Suggestions for Connecting and Installing Ducts . . . 12
Inlet Air Ductwork . . . 13
Discharge Air Ductwork . . . 14
VENTING/COMBUSTION AIR CONNECTIONS . . . 15
Venting/Combustion Air Requirements for Power-Vented Installations . . . 16
Power-Venting Requirements: Piping . . . 17
Power-Venting Requirements: Joints and Sealing . . . 18
Power-Venting Requirements: Support . . . 20
Power-Venting Requirements: Condensation . . . 20
Power-Venting Requirements: Vent Terminal . . . 20
Venting/Combustion Air Requirements for Separated-Combustion Installations . . . 23
Separated-Combustion Requirements: Piping . . . 23
Separated-Combustion Requirements: Joints and Sealing . . . 24
Separated-Combustion Requirements: Support . . . 24
Separated-Combustion Requirements: Condensation . . . 24
Separated-Combustion Requirements: Concentric Adapter Box . . . 24
Separated-Combustion Requirements: Concentric Adapter Box Connections . . . 26
Separated-Combustion Requirements: Vent Terminal Options . . . 26
Vertical Vent Terminal for Separated-Combustion Installations (Option CC2) . . . 27
Horizontal Vent Terminal for Separated-Combustion Installations (Option CC6) . . . 32
CONTROLS . . . 36
Standard Controls . . . 37
Combustion Air Proving Switch . . . 37
Flame Rollout Switch . . . 37
Limit Control . . . 37
Combination Gas Valve . . . 37
Ignition System . . . 38
Belts, Blowers, and Drives . . . 38
Blower Compartment Door Switch . . . 38
Venter Assembly . . . 38

TABLE OF CONTENTS—CONTINUED

Optional Controls . . . 39
Thermostat . . . 39
Two-Stage Makeup Air with Ductstat (Option AG3) . . . 39
Mixing Box Inlet Air Dampers (Options GA6 and GA8) . . . 39
Two-Position Damper Motor (Option GB2) . . . 39
Modulating Damper Motor (Option GB4) . . . 39
OPERATION . . . 40
Pre-Startup Checklist . . . 40
Startup . . . 40
Operating Sequences . . . 42
Normal Heat Cycle Operating Sequence . . . 42
Abnormal Heat Cycle Functions . . . 42
Ignition System Operating Sequence . . . 43
Ignition System Fault Modes . . . 43
Vent System Testing . . . 44
Post-Startup Checklist . . . 44
ADJUSTMENTS . . . 45
Checking and Adjusting Belt Tension . . . 45
Adjusting Blower Speed . . . 46
Motor Amp Adjustment . . . 47
Ductstat Adjustment (Two-Stage, Makeup Air, Option AG3) . . . 47
Measure and Adjust Manifold (Outlet) Gas Pressure . . . 48
High-Elevation Conversion . . . 49
Gas Conversion . . . 51
MAINTENANCE . . . 51
Service Checklist . . . 51
Maintenance Procedures . . . 51
Vent/Combustion Air System Maintenance . . . 51
Combination Gas Valve Maintenance . . . 52
Burner Rack and Manifold Maintenance . . . 52
Combustion Air Proving Switch Maintenance . . . 53
Ignition System Maintenance . . . 54
Cleaning Heat Exchanger . . . 54
Venter Motor and Wheel Maintenance . . . 55
Limit Control Maintenance . . . 56
Blower and Blower Motor Maintenance . . . 56
Filter Maintenance . . . 56
Condensate Drain Maintenance . . . 56
Inlet Air Damper Maintenance . . . 56
Electrical Component Replacement . . . 57
TROUBLESHOOTING . . . 57
General Troubleshooting . . . 57
Unit Troubleshooting Using Ignition Control Module . . . 59
INSTALLATION RECORD (TO BE COMPLETED BY INSTALLER) . . . 64

GENERAL INFORMATION

- The instructions in this manual apply to a model CAUA heater.
- Read this booklet and become familiar with the installation requirements of your particular heater. If you do not have knowledge of local requirements, check with the gas company or any other local agencies who might have requirements concerning this installation.
- This unit has been tested for capacity and efficiency so as to provide many years of safe and dependable comfort providing it is properly installed and maintained. With regular maintenance, this unit will operate satisfactorily year after year. Abuse, improper use, and/or improper maintenance can shorten the life of the appliance and create unsafe hazards.
- To achieve optimum performance and minimize equipment failure, it is recommended that periodic maintenance be performed on this unit. The ability to properly perform maintenance on this equipment requires certain tools and mechanical skills.
- This unit requires the installation of an inlet air duct and a supply duct. Installation of an optional mixing box allows for a mixture of return and outside air. If the air entering the blower will ever be below 35°F (2°C), the unit must have been ordered with factory-installed makeup air option AD4 which includes required stainless steel components and a condensate drain.
- This unit may be installed as a separated-combustion system (taking combustion air from outside) or as a power-vented system (taking combustion air from the space where the heater is installed). Separated-combustion units are designed to separate the air for combustion and the flue products from the environment of the building in which the unit is installed. Separated-combustion appliances are recommended for use in dust laden and some corrosive fume environments or in buildings with negative pressure (up to 0.15 IN WC). If installed as a separated-combustion system, the heater must be equipped with both combustion air and exhaust piping to the outdoors. This unit must be vented to the outdoors.

NOTE: Unit sizes 250 and 300 were discontinued AUG 2023 with the introduction of unit size 275. For discontinued unit sizes, refer to the installation manual provided with the unit or contact your Factory Representative.

Important Safety Information

Please read all information in this manual thoroughly and become familiar with the capabilities and use of your appliance before attempting to operate or maintain this unit. Pay attention to all dangers, warnings, cautions, and notes highlighted in this manual. Safety markings should not be ignored and are used frequently throughout to designate a degree or level of seriousness.

DANGER: A danger statement describes a potentially hazardous situation that if not avoided, will result in severe personal injury or death and/or property damage.

WARNING: A warning statement describes a potentially hazardous situation that if not avoided, can result in severe personal injury and/or property damage.

CAUTION: A caution statement describes a potentially hazardous situation that if not avoided, can result in minor or moderate personal injury and/or property damage.

NOTE: A note provides important information that should not be ignored.

⚠ DANGER ⚠

- **Gas-fired appliances are not designed for use in hazardous atmospheres containing flammable vapors or combustible dust, in atmospheres containing chlorinated or halogenated hydrocarbons, or in applications with airborne silicone substances.**
- **Should overheating occur, or the gas supply fail to shut off, shut off the manual gas valve to the appliance before shutting off the electrical supply.**
- **Do not use this appliance if any part has been under water. Immediately call a qualified service technician to inspect the appliance and replace any gas control which has been under water.**

⚠ WARNING ⚠

- **For your safety, read the warning labels on the unit.**
- **If you turn OFF the power supply, turn OFF the gas.**

NOTE: Installation should be done by a qualified agency in accordance with the instructions in this manual and in compliance with all codes and requirements of authorities having jurisdiction. Service work on this heater should only be done by a qualified gas service technician. The service information and the troubleshooting guides are intended as an aid to a qualified service technician.

Certification

These heaters are listed by Intertek for use in industrial and commercial installations in the United States and Canada. Heaters are available for use with either natural gas or propane. The type of fuel, the firing rate, and the electrical characteristics are on the unit rating plate.

Installation Codes

- These units must be installed in accordance with local building codes. In the absence of local codes, in the United States, the unit must be installed in accordance with the *National Fuel Gas Code* (NFPA 54/ANSI Z223.1, latest edition). A Canadian installation must be in accordance with the *Natural Gas and Propane Installation Code* (CSA B149, latest edition). This code is available from CSA Information Services, 1-800-463-6727. Local authorities having jurisdiction should be consulted before installation is made to verify local codes and installation procedure requirements.
- Installations in aircraft hangars should be in accordance with the *Standard for Aircraft Hangars* (ANSI/NFPA 409, latest edition). Installations in public garages should be in accordance with the *Standard for Parking Structures* (ANSI/NFPA 88A, latest edition). Installations in repair garages should be in accordance with the *Standard for Repair Garages* (NFPA 88B), which has been incorporated into the *Code for Motor Fuel Dispensing Facilities and Repair Garages* (NFPA 30A, latest edition). In Canada, installations in aircraft hangars and public garages should be in accordance with CSA B149.
- If the heater is being installed in the Commonwealth of Massachusetts, installation must be performed by a licensed plumber or licensed gas fitter.

Warranty

Refer to the limited warranty information on the warranty card in the owner's envelope. Warranty is void if:

- Wiring is not in accordance with the diagram furnished with the heater.
- The unit is installed without proper clearance to combustible materials.
- The unit is exposed to halogenated hydrocarbons.

Unit Location

⚠ CAUTION ⚠

- **The unit must be level for proper operation.**
- **Do not locate the unit where it may be exposed to water spray, rain, or dripping water.**

Check the rating plate for the gas specifications including elevation and the electrical characteristics of the heater to ensure that they are compatible with the gas and electric supplies and the elevation of the installation site.

Dimensions

NOTE: For dimensions of optional cabinets—outside/return air mixing box or return air filter cabinet—refer to the installation instructions for that option found at www.reznorhvac.com.

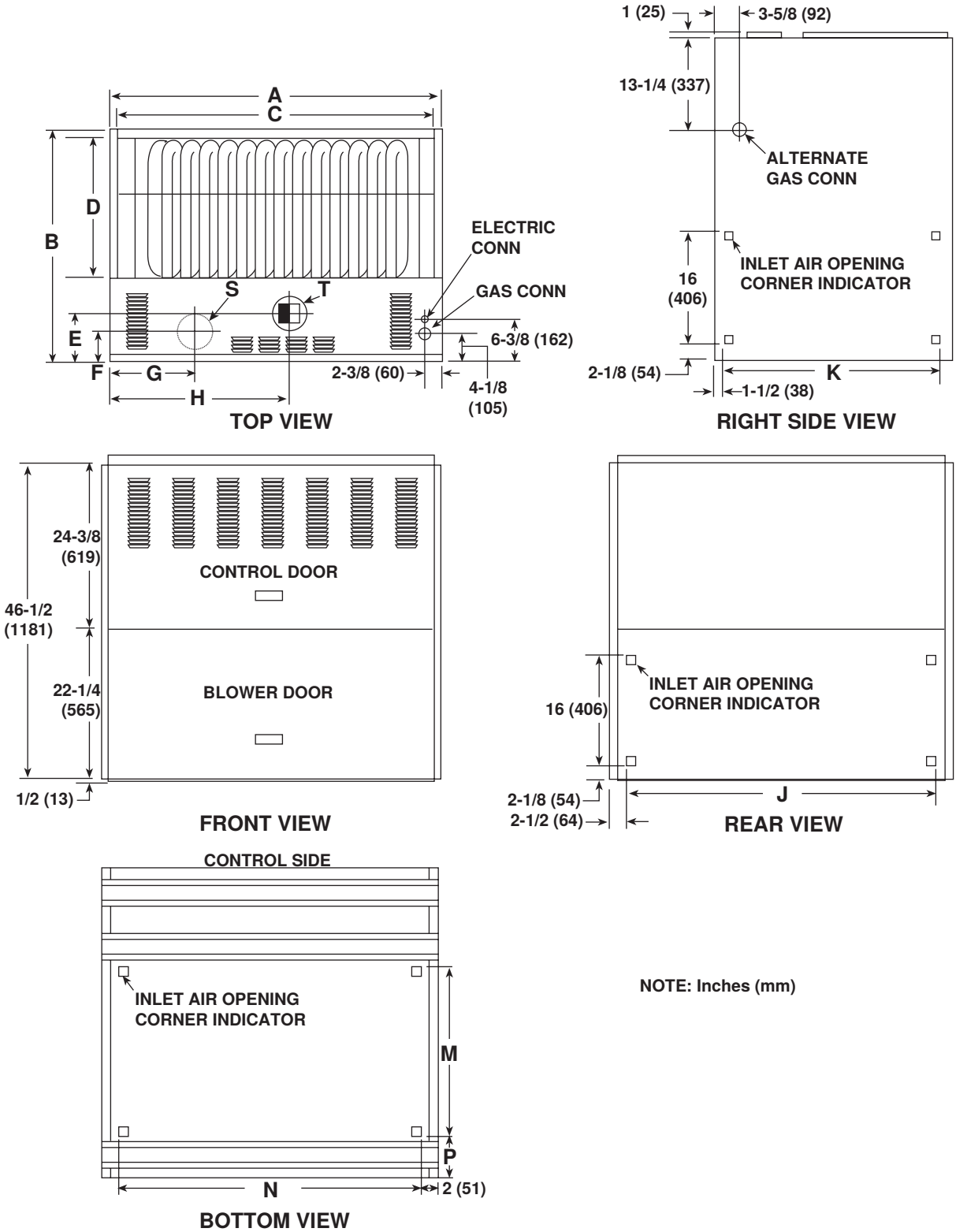

Figure 1. Dimensions (Refer to Table 1)

Table 1. Dimensions															
Unit Size (MBTUh)	Dimension (See Figure 1)														
	A	B	C	D	E	F	G	H	J	K	M	N	P	S	T
	Inches (mm)														
150, 200	38 (965)	34-3/4 (883)	36 (914)	21 (533)	7-1/4 (184)	3-3/4 (95)	12-1/2 (318)	24 (610)	33 (838)	31 (787)	19 (483)	34 (864)	4-5/8 (117)	5 (127)	5 (127)
275	50 (1270)	34-3/4 (883)	48 (1219)	21 (533)	7-1/4 (184)	4-3/8 (111)	12-3/4 (324)	27-1/4 (692)	45 (1143)	31 (787)	16 (406)	46 (1168)	4-3/4 (121)	6 (152)	6 (152)
350, 400	50 (1270)	50 (1270)	48 (1219)	34 (864)	7 (178)	4-3/8 (111)	14-1/8 (359)	26-3/4 (679)	45 (1143)	44 (1118)	32 (813)	46 (1168)	4-7/8 (124)	6 (152)	6 (152)

Air Opening (See Figure 1)	Inches (mm)
Supply air (discharge with duct flange)	C × D
Inlet air opening, right side or left side (location selected by installer)	16 (406) × K
Inlet air opening, rear (location selected by installer)	16 (406) × J
Bottom	M × N

Weights

NOTE: For weights of optional cabinets—outside/return air mixing box or return air filter cabinet—refer to the installation instructions for that option found at www.reznorhvac.com.

Table 2. Weights				
Unit Size (MBTUh)				
150	200	275	350	400
Net Weight (Pounds (kg))				
288 (131)	300 (136)	394 (179)	445 (202)	464 (210)

Clearances

Clearance to combustibles is defined as the minimum distance—from the heater to a surface or object—that is necessary to ensure that a surface temperature of 90°F (50°C) above the surrounding ambient temperature is not exceeded. The unit must be installed so that the clearances listed in Table 3 are provided for service and inspection and for proper spacing from combustible construction.

Table 3. Clearances	
Unit Surface	Minimum Clearance (Inches (mm))
Right side, left side, rear, and bottom	0 (0)
Front (service side)	36 (914)
Flue connector	6 (152)
Top	1 (25)

Halogenated Hydrocarbons

Halogenated hydrocarbons are a family of chemical compounds characterized by the presence of halogen elements (fluorine, chlorine, bromine, etc.). These compounds are used in refrigerants, cleaning agents, and solvents and are heavier than air, a fact that should be kept in mind when determining the installation location of heaters and building exhaust systems.

⚠ CAUTION ⚠

CORROSION HAZARD: Halogenated hydrocarbons, when exposed to flame, precipitate with any condensation present in the heater to form hydrochloric acid, which readily attacks all metals, including 300 grade stainless steel. Care should be taken to separate these vapors from the combustion process. An outside air supply MUST BE provided to the burner whenever the presence of these compounds is suspected.

INSTALLATION

Unpacking and Inspection

The unit was test-operated and inspected at the factory prior to crating and was in operating condition. If, upon removing it from its crate, the unit has been found to have incurred any damage in shipment, document the damage with the transporting agency and contact an authorized Factory Distributor. If you are an authorized Distributor, follow the FOB freight policy procedures.

Pre-Installation Checklist

- ❑ Check the rating plate for the gas specifications and electrical characteristics of the heater to ensure that they are compatible with the gas and electric supplies at the installation site.
- ❑ Read this manual and become familiar with the installation requirements of your particular heater.
- ❑ If you do not have knowledge of local requirements, check with the local gas company or any other local agencies who might have requirements concerning this installation.
- ❑ Before beginning, make preparations for necessary supplies, tools, and manpower.
- ❑ Check to see if there are any field-installed options (refer to **Table 4**) that need to be assembled/installed prior to unit installation. Ensure that all options ordered are at the installation site. Instructions are in this manual or in the shipped-separate option package.

Table 4. Field-Installed Options

Option	Description
AW9	Filter rack with 2-inch permanent filters (with mixing box)
AW11	Filter rack with 2-inch pleated disposable MERV8 filters (with mixing box)
AW40	Filter rack with 2-inch pleated disposable MERV14 filters (with mixing box)
CC1	Vent cap
CC2	Vertical vent terminal kit
CC6	Horizontal vent terminal kit
CL1	Single-stage thermostat
CL22, CL23, CL33	Two-stage thermostats
CM1	Locking thermostat cover
CM1B	Large locking thermostat cover
CN1A–CN3Z	Various remote switch options
CP1, CP2, CP3, CP4, CP17, CP20, CP21, CP23, CP41, CP43, CP58, CP60	Disconnect switches
CW4–CW8, CW11, CW12, CW13	Various return air filter cabinet options
GA6, GA8	Mixing boxes
GB2, GB4	Damper motors
GC3C	Two-position cooling mode damper control
GC4	Two-position damper control for warm up/cool down return air thermostat
GC3B	Cooling mode enthalpy/heating mode mixed air control (with option GB4)
PC4	Vibration isolators

Positioning and Mounting

- Determine the position of the heater with regard to clearances, venting, combustion air, gas supply connection, electrical supply connection, and the inlet air opening.
- **Vibration isolation pads (option PC4):** If the installation includes optional vibration isolation pads, tip the corner of the unit enough to slide a pad underneath. Remove the access panel and secure the pad to the cabinet with the screw provided. Repeat the procedure at all four corners.

Piping Connections

Gas Supply Pressure

- The unit is equipped for a maximum gas supply pressure of 1/2 psi, 3.5 kPa, or 14 IN WC for natural gas or propane. The minimum supply pressure is 5 IN WC for natural gas or 11 IN WC for propane.
- Supply pressure higher than 1/2 psi requires the installation of an additional service regulator external to the unit.
- **Pressure testing supply piping:** For test pressures ***above*** 1/2 psi, disconnect the heater and manual valve from the gas supply line to be tested and cap or plug the supply line. For test pressures ***below*** 1/2 psi, before testing, close the manual valve on the heater.

Gas Supply Piping

⚠ DANGER ⚠

- **All components of a gas supply system must be leak tested prior to placing equipment in service. NEVER TEST FOR LEAKS WITH AN OPEN FLAME. Failure to comply could result in personal injury, property damage, or death.**
- **Pipe joint compounds (pipe dope) shall be resistant to the action of liquefied petroleum gas or any other chemical constituents of the gas being supplied.**

- All piping must be in accordance with requirements outlined in the *National Fuel Gas Code* (ANSI/Z223.1, latest edition) or the *Natural Gas and Propane Installation Code* (CSA B149.1, latest edition).
- Gas supply piping installation should conform with good practice and with local codes.
- The heater is orificed for operation with natural gas having a heating value of 1,000 (±50) BTU per cubic foot or with propane gas having a heating value of 2,550 (±100) BTU per cubic foot. Sizing of gas supply lines depends on piping capacity and is based on cubic feet per hour based on a 0.3 IN WC pressure drop, a 0.6 specific gravity for natural gas at 1,000 BTU per cubic feet, and a 1.6 specific gravity for propane at 2,550 BTU per cubic feet. If the gas at the installation does not meet this specification, consult the factory for proper orificing.
- Variables for sizing gas supply lines are listed in **Table 5**. When sizing supply lines, consider the possibility of future expansion and increased requirements. Refer to the *National Fuel Gas Code* for additional information on line sizing.

Table 5. Gas Supply Line Sizes

Pipe Length (Feet)	Natural Gas						Propane					
	Pipe Diameter (Inches)											
	1/2	3/4	1	1-1/4	1-1/2	2	1/2	3/4	1	1-1/4	1-1/2	2
	Cubic Feet per Hour											
20	92	190	350	730	1100	2100	56	116	214	445	671	1281
30	73	152	285	590	890	1650	45	93	174	360	543	1007
40	63	130	245	500	760	1450	38	79	149	305	464	885
50	56	115	215	440	670	1270	34	70	131	268	409	775
60	50	105	195	400	610	1105	31	64	119	244	372	674
70	46	96	180	370	560	1050	28	59	110	226	342	641
80	43	90	170	350	530	990	26	55	104	214	323	604
90	40	84	160	320	490	930	24	51	98	195	299	567
100	38	79	150	305	460	870	23	48	92	186	281	531
125	34	72	130	275	410	780	21	44	79	168	250	476
150	31	64	120	250	380	710	19	39	73	153	232	433
175	28	59	110	225	350	650	17	36	67	137	214	397
200	26	55	100	210	320	610	16	34	61	128	195	372

Piping Connections—Continued

Supply Piping Connections

- Gas connections sizes are listed in **Table 6**.
- Install a ground joint union and manual shutoff valve upstream of the unit control system. The 1/8-inch plugged tapping in the shutoff valve provides connection for the supply line pressure test gauge. The *National Fuel Gas Code* requires the installation of a trap with a minimum 3-inch drip leg. Local codes may require a longer drip leg, typically 6-inch (see **Figure 2**).
- Seal the opening for the gas supply pipe with the grommet provided.
- Bleed the system of all air and leak test all connections by brushing on a soap solution.

Table 6. Gas Connection Sizes

Gas Type	Unit Size (MBTUh)	
	150, 200	275, 350, 400
	Connection Size (Inches)	
Natural gas	1/2	3/4
Propane		
NOTE: The above are not supply line sizes. They are gas connection sizes for a standard unit.		

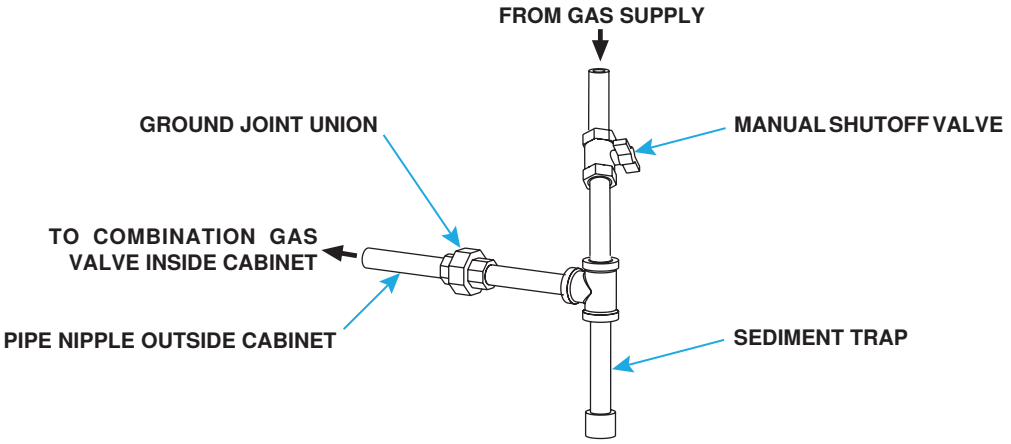

Figure 2. Gas Connections

Flue Wrapper Condensate Drain Installation

If equipped with a makeup air option to allow inlet air less than 35°F (2°C) (option AD4), the flue wrapper will have a condensate drain (see **Figure 3**). The condensate drain tubing exits through an opening in the side panel. Connect it into a sanitary drain.

NOTE: Periodic cleaning of the condensate collector and disposal system is required.

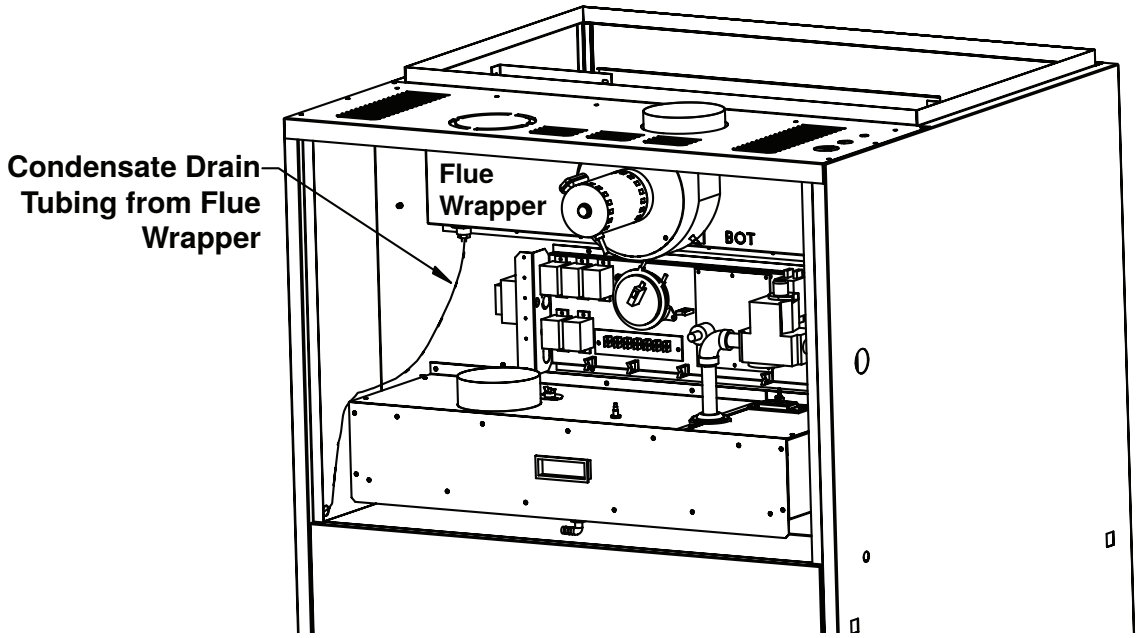

Figure 3. Flue Wrapper Condensate Drain

Electrical Connections

⚠ WARNING ⚠

If you turn OFF the power supply, turn OFF the gas.

⚠ CAUTION ⚠

- **If any of the original wire as supplied with the appliance must be replaced, it must be replaced with wiring material having a temperature rating of at least 220°F (105°C), except for the sensor lead wires, which must be rated at 302°F (150°C).**
- **All external wiring must be within approved conduit and have a minimum temperature rise rating of 140°F (60°C). Conduit from the disconnect switch must be run so as not to interfere with the service panels of the heater.**
- **Ensure that all wiring is in accordance with the wiring diagram provided with the unit. Refer to separate instruction sheets for any optional equipment provided.**
- **All electrical wiring and connections, including electrical grounding, MUST BE completed in accordance with local, state and national codes and regulations and with the *National Electric Code* (ANSI/NFPA No. 70) or in Canada, the *Canadian Electrical Code* (Part 1, CSA C.22.1). In addition, the installer should be aware of and comply with any local ordinances or gas company requirements.**

Supply Wiring Connection

NOTE: A separate line voltage supply with fused disconnect switch should be run directly from the main electrical panel to the heater.

Check the rating plate on the heater for the supply voltage and current requirements. The electrical supply wiring enters at the top of the heater (see **Figure 1**) and connect to the supply voltage terminal strip located above the contactor(s) or starter(s) in accordance with the wiring diagram provided with the heater.

Electrical Connections—Continued

Control Wiring Connections

Control wiring enters on the right side of the heater and connects to the thermostat terminal strip in the control compartment (see **Figure 4**). Connect the optional thermostat in accordance with **Table 7**.

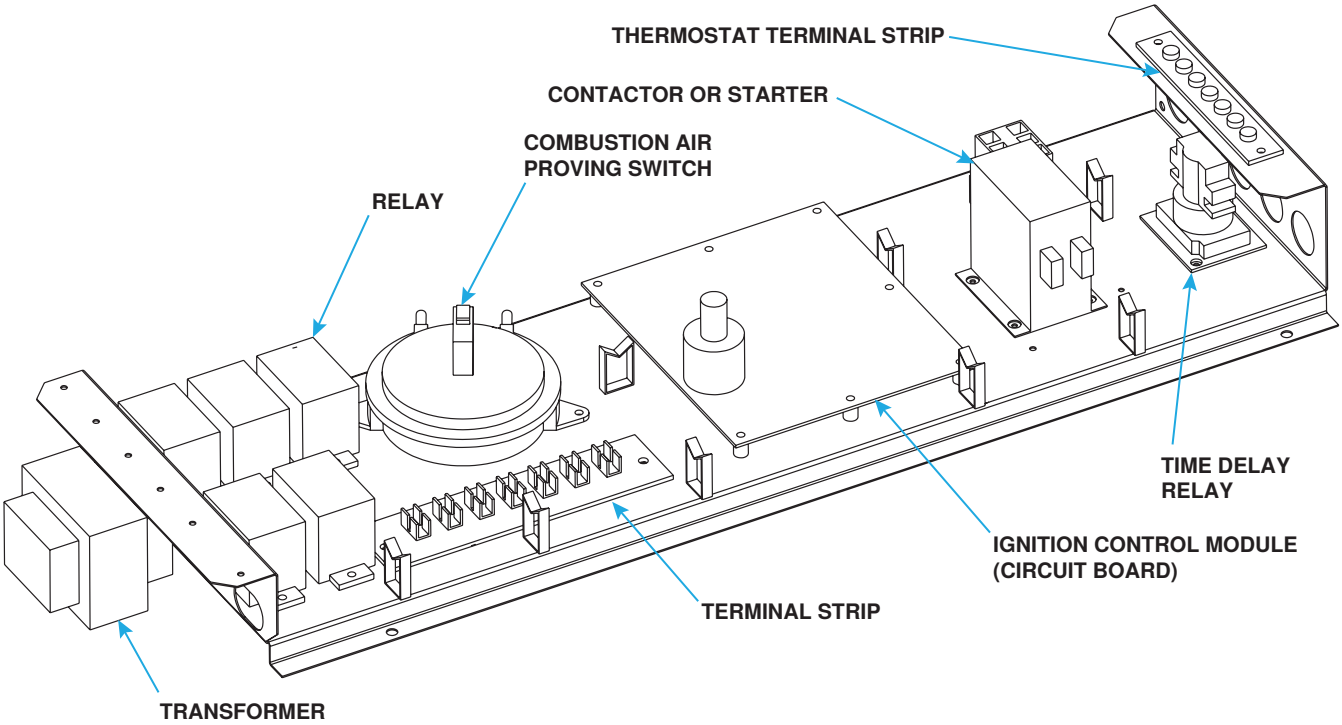

Figure 4. Control Panel

Table 7. Optional Thermostat Connections

Thermostat Option	Thermostat Terminal Strip Connection						
	R	C	Y1	Y2	W1	W2	G
	Thermostat Connection						
CL1	R	—			W	—	
CL22	RH-RC	C	Y1	Y2	W1	W2	G
CL33							
CL52		—	Y	—	W	—	

Duct Connections

⚠ CAUTION ⚠

To prevent possible motor overloading, ensure that the external duct system static pressure is within the limits shown on the rating plate and that the motor pulley and belt are properly adjusted.

Requirements and Suggestions for Connecting and Installing Ducts

- **Type of ductwork:** The type of duct installation to be used depends in part on the type of construction of the building.
- **Ductwork material:** Rectangular duct should be constructed of galvanized iron—not lighter than No. 26 US gauge —or aluminum—No. 24 B&S gauge.
- **Ductwork structure:** All duct sections 24 inches (610 mm) or wider and over 48 inches (1,219 mm) in length should be cross-broken on top and bottom and should have standing seams or angle-iron braces. Joints should be S and drive strip or locked.
- **Through unheated space:** Insulate all exposed warm air ducts passing through an unheated space with 1-inch (not less than 1/2-inch) of insulation.

- **Through masonry walls:** No warm air duct should come in contact with masonry walls. Insulate around all air duct through masonry walls with 1-inch (not less than 1/2-inch) of insulation.
- **Duct supports:** Suspend all ducts securely from adjacent buildings members. Do not support ducts from unit duct connections.
- **Duct sizing:** Proper sizing of the supply air ductwork is necessary to ensure a satisfactory heating installation. The recognized authority for duct size is the Air Conditioning Contractor's Association, 2800 Shirlington Road, Suite 300, Arlington, VA 22206 (**www.acca.org**). A manual covering duct sizing in detail may be purchased directly from them.
- **Access panels:** Install removable access panels on both the upstream and downstream sides of the furnace. The access panels must be accessible when the furnace is in service and should be a minimum of 6 × 10 inches (152 × 254 mm) in size so smoke or reflected light may be observed inside the casing to indicate the presence of leaks in the heat exchanger. Ensure that the access panels are installed in such a manner so as to prevent leakage.

Inlet Air Ductwork

- Inlet air ductwork is required. Inlet air may be 100% return air, a mixture of return and outside air (air entering the blower must be ≥35°F (≥2°C) unless equipped with makeup air option AD4), or 100% outside air if equipped with makeup air option AD4.

⚠ CAUTION ⚠

Use tin snips or aviation shears to cut the inlet air opening. Use caution as the cut edges of the metal will be sharp.

- The inlet air opening (refer to **Table 8**) may be in the right side, in the left side, in the rear, or in the bottom of the cabinet and must be cut by the installer. Either cut out the inlet air opening now or when attaching the filter cabinet or mixing box. If the application includes an optional bottom filter cabinet, either lay the heater down and cut the opening now or cut it out from the inside after the heater is placed on the bottom filter cabinet. Attach the ductwork to the heater or to the inlet cabinet.

NOTE: Refer to the inlet air option installation manual found at www.reznorhvac.com for kit components and installation instructions.

- **Filter cabinet (option CW, return air only):** All of the filter cabinets have a duct flange for attaching the inlet air duct. For inlet duct dimensions, refer to **Table 8**.
- **Outside air and return air mixing box (option GA):** All mixing box inlet air openings have duct flanges for attachment of ductwork. Ductwork must be attached to the outside air opening. Removable door panels provide for filter access from either end of the cabinet. If the mixing box was ordered with optional filters, it is shipped with the filters installed. For inlet duct dimensions, refer to **Table 8**.

Table 8. Inlet Air Opening Dimensions

Opening Type	Location	Unit Size (MBTUh)		
		150, 200	275	350, 400
		Dimensions (Inches (mm))		
Without optional filter or mixing cabinet (actual cutout opening on heater)	Right and left sides	31 × 16 (787 × 406)	31 × 16 (787 × 406)	44 × 16 (1118 × 406)
	Rear	33 × 16 (838 × 406)	45 × 16 (1143 × 406)	45 × 16 (1143 × 406)
	Bottom	25-1/2 × 32 (648 × 813)	37-1/2 × 32 (953 × 813)	37-1/2 × 46 (953 × 1168)
With optional side or rear filter cabinet (duct opening in top or rear of cabinet)	Attached to heater side	32 × 16 (813 × 406)		45-1/8 × 16 (1146 × 406)
	Attached to heater rear	32 × 16 (813 × 406)	45-1/8 × 16 (1146 × 406)	
With optional bottom filter cabinet (duct opening in bottom of cabinet)	Under heater	25-1/2 × 32 (618 × 813)	37-1/2 × 32 (953 × 813)	37-1/2 × 46 (953 × 1168)
With optional mixing box (duct opening in top, bottom, or rear of cabinet)	Attached to heater rear	22 × 19-1/2 (578 × 495)	36-1/2 × 19-1/2 (927 × 495)	

Duct Connections—Continued

Discharge Air Ductwork

NOTE: If the unit is being installed as a makeup air unit with two-stage control (option AG3), refer to the Two-Stage Makeup Air with Ductstat (Option AG3) section for instructions on installing the duct sensor.

- The discharge duct connects to the top of the heater. Connect the ductwork plenum to the duct flange as shown in Figure 5. The duct connection on the top of the heater has a 90-degree flange. The duct may either have no flange or a 90-degree flange. Position ductwork around the outside of the heater flange. If the ductwork has a flange, drill holes vertically through duct flange into the top of the heater and secure using sheet metal screws. If the ductwork does not have a flange, drill holes horizontally through the ductwork and the heater flange and secure using sheet metal screws.
- **Removable access panel in ductwork (see Figure 5):** Minimum size is 6 inches × 10 inches (152 mm × 254 mm). Panel must be sealed.

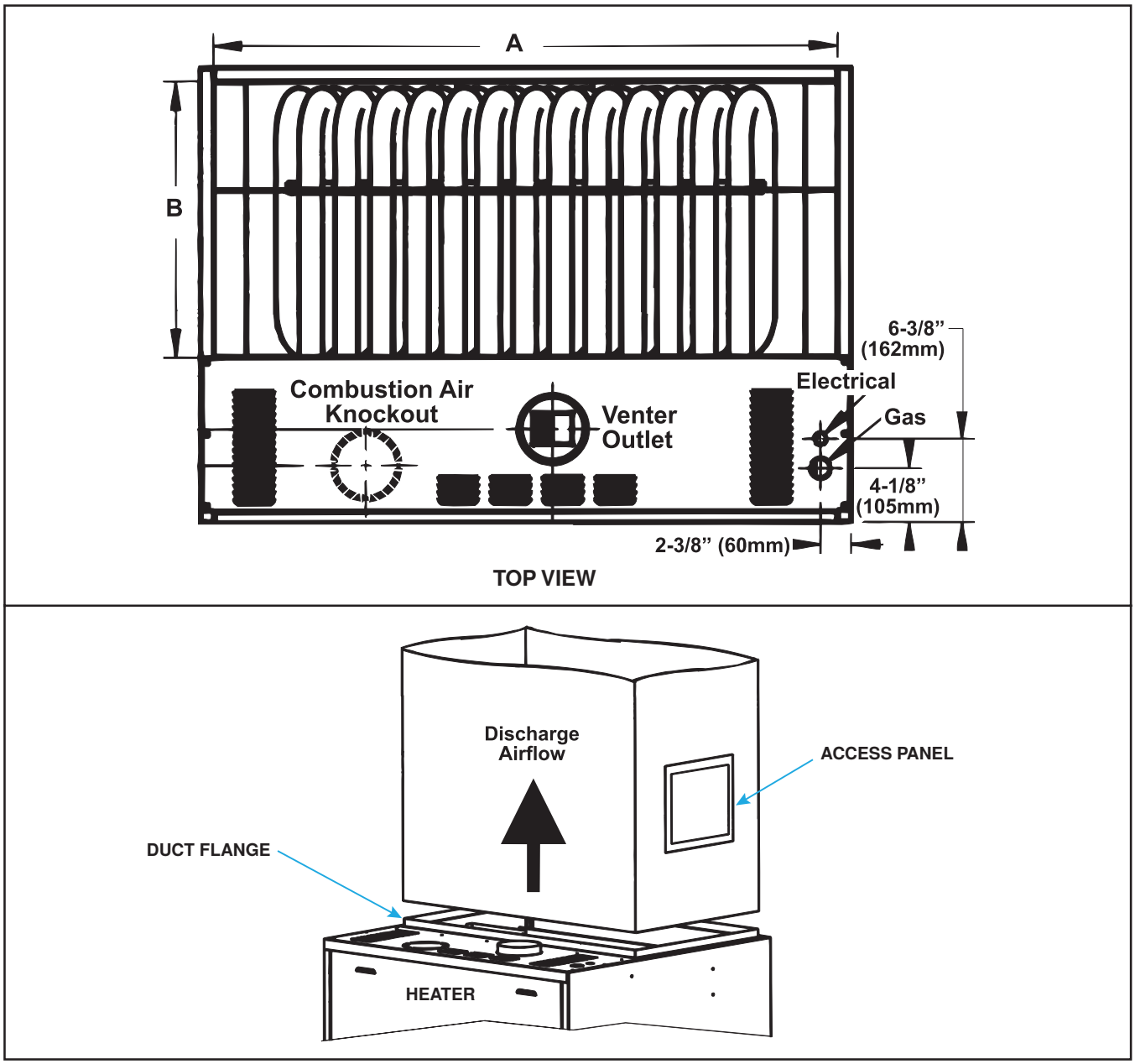

Figure 5. Discharge Duct Connection (Refer to Table 9)

Table 9. Discharge Duct Dimensions			
Dimension (See Figure 5)	Unit Size (MBTUh)		
	150, 200	275	350, 400
	Dimensions (Inches (mm))		
A	36 (914)	48 (1219)	48 (1219)
B	21 (533)	21 (533)	34 (864)

VENTING/COMBUSTION AIR CONNECTIONS

⚠ DANGER ⚠

- **The vent must be installed in accordance with national and local regulations. Failure to provide proper venting could result in death, serious injury and/or property damage. This unit must be installed with a vent to the outside of the building. Safe operation of any power-vented, gas-fired equipment requires a properly operating vent system, correct provision for combustion air, and regular maintenance and inspection.**
- **Units installed in multiples require individual vent pipe runs and vent caps. Manifolding of vent runs is not permitted due to possible recirculation of combustion products into the building and back pressure effects on the combustion air proving switch.**
- **Venting must be in accordance with the *National Fuel Gas Code* (Z223.1) or the *Natural Gas and Propane Installation Code* (CSA B149.1) and *Installation Code for Gas Burning Appliances and Equipment* (B149.2) and all local codes. Local requirements supersede national requirements. Combustion air for this heater may be either taken from the space or may be ducted from the outside using the concentric adapter combustion air/vent system. Flue products must always be vented to the outdoors.**

⚠ CAUTION ⚠

Products of combustion can cause discoloration of some building finishes and deterioration of masonry materials. A clear silicone sealant normally used to protect concrete driveways may be used to protect masonry materials from discoloration and deterioration. If discoloration is an esthetic problem relocate the vent or install a vertical vent.

NOTES:

- **Installation should be done by a qualified agency in accordance with these instructions. The qualified service agency installing the vent or vent/combustion air system is responsible for the installation.**
- **The venting or venting/combustion air systems illustrated in this manual are the only ones approved for a model CAUA heater.**

DECIDE WHICH VENTING SYSTEM TO INSTALL:

- **Power-vented: a power-vented installation uses a power venter to draw combustion air from the indoor space and exhaust flue products to the outdoors. A vent cap (option CC1 or equivalent) is required.**
- **Separated-combustion: a separated-combustion installation requires a vent/combustion air system that uses a power venter to duct combustion air from outdoors and exhaust flue products to the outdoors. A vent/combustion air kit (option CC2 or CC6) is required.**

Venting/Combustion Air Requirements for Power-Vented Installations

⚠ WARNING ⚠

Do not install a unit in a confined space without providing wall openings leading to and from the space. If the environment has a positive pressure and is such that it is not detrimental to combustion air, the power-venting system in this section may be installed.

- To provide combustion air to the heater, sufficient air must enter the equipment location to replace that exhausted through the heater vent system. In the past, the infiltration of outside air assumed in heat loss calculations (one air change per hour) was assumed to be sufficient. However, current construction methods using more insulation, vapor barriers, tighter fitting and gasketed doors and windows, weather-stripping, and/or mechanical exhaust fans may now require the introduction of outside air through wall openings or ductwork to the equipment room.
- Under all conditions, enough air must be provided to ensure there will not be a negative pressure condition within the equipment room or space.
- Requirements for combustion air and ventilation air depend upon whether the unit is located in a confined or unconfined space. A ***confined*** space is defined as a space whose volume is <50 cubic feet per 1,000 BTUh of the installed appliance input rating. An ***unconfined*** space is defined as a space whose volume is ≥50 cubic feet per 1,000 BTUh of the installed appliance input rating.
- Provide openings (depending on the combustion air source) near the floor and ceiling for ventilation and air for combustion, as shown in **Figure 6** and as listed in **Table 10**.

NOTE: For further details on supplying combustion air to a confined space, refer to the *National Fuel Gas Code* (ANSI Z223.1a, latest edition).

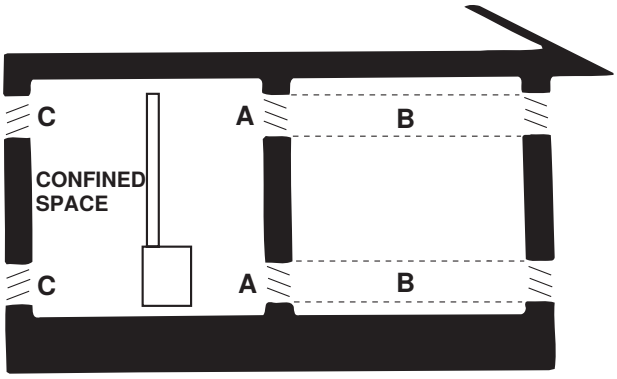

Figure 6. Confined Space Combustion Air Openings (Refer to Table 10)

Table 10. Determining Confined Space Combustion Air Requirements

Letter*	Air Source	Required Opening Size	Calculate Combustion Air Requirements
A	Air inside building	1 square inch free area per 1000 BTUh	Add total BTUh of all appliances in confined space and divide by figures at left for square inch free area size of each (top and bottom) opening
		Never <100 square inches free area for each opening	
B	Outside air through duct	1 square inch free area per 2000 BTUh	
C	Direct outside air	1 square inch free area per 4000 BTUh	

*See **Figure 6**.

Power-Venting Requirements: Piping

- **Type of pipe:** All pipe is field supplied. Use either vent pipe approved for a Category III appliance or single-wall, 26-gauge or heavier galvanized (or a material of equivalent durability and corrosion resistance) vent pipe.

NOTE: If local code requires, a double-wall terminal section may be installed with a single-wall or Category III vent pipe run OR if at least 1/2 of the equivalent vent length is vertical, vent pipe approved for a Category I heater may be used. Single-wall pipe or Type B double-wall vent pipe is suitable for use with a Category I heater.

- **Venter (flue) outlet:** A minimum of 12 inches (305 mm)of straight pipe is required at the venter outlet (refer to **Table 11**) before installing an elbow in the vent system. An elbow should never be attached directly to the venter. An elbow attached to the straight pipe can be in any position at or above horizontal (see **Figure 7**, DETAIL A).

Table 11. Venter Outlet Diameter

Unit Size (MBTUh)	
150, 200	275, 350, 400
Inches (mm)	
5 (127)	6 (152)

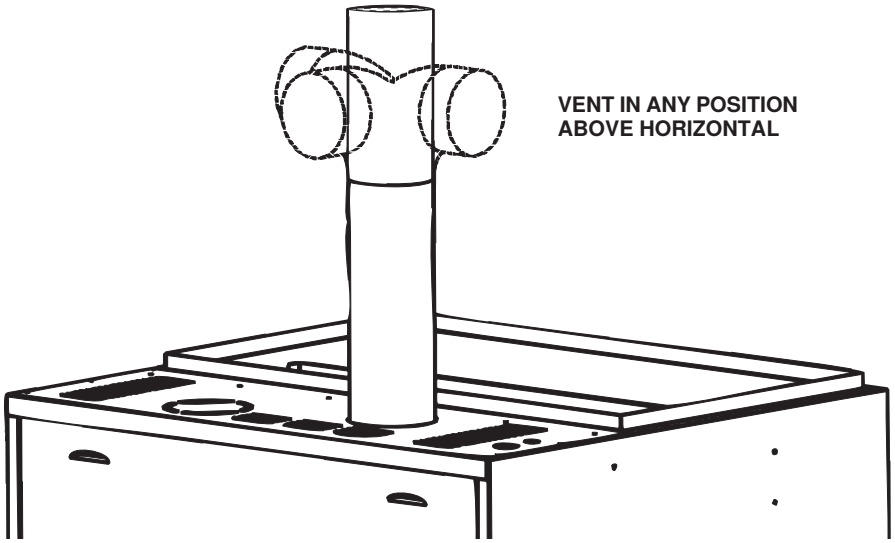

DETAIL A: ALTERNATE VENT DIRECTIONS

STEP 1: PLACE CONTINUAL 1/4-INCH BEAD OF SILICONE SEALANT AROUND CIRCUMFERENCE OF VENTER OUTLET COLLAR.

PERFORM STEP 2 IMMEDIATELY AFTER STEP 1.

STEP 2: SLIDE DOUBLE-WALL PIPE OVER COLLAR SO THAT COLLAR IS INSIDE INNER PIPE. PUSH DOUBLE-WALL PIPE TIGHT TO HEATER CABINET. TO SECURE CONNECTION, SPACED EQUAL DISTANCE AROUND PIPE, DRILL AND INSERT THREE 3/4-INCH-LONG SHEET METAL SCREWS THROUGH PIPE AND INTO COLLAR. DO NOT OVER TIGHTEN SCREWS.

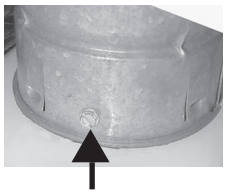

DETAIL B: CONNECTING DOUBLE-WALL (TYPE B) VENT PIPE TO VENTER OUTLET

Figure 7. Vent Pipe for Power-Vented Installations

Venting/Combustion Air Requirements for Power-Vented Installations—Continued

Power-Venting Requirements: Piping—Continued

NOTES:

- **Do not install dampers or any other type of flue restrictor device.**
- **If installing a double-wall vent run (allowed if half of the vent length is vertical), see Figure 7, DETAIL B.**

- **Vent pipe diameter and length (refer to Table 12):** If the system contains all vertical pipe or a combination of horizontal and vertical vent pipe, the maximum permissible vent length may be increased 1 foot (305 mm) for each foot (305mm) of vertical rise up to a maximum increase of 10 feet (3 meters).

Table 12. Vent Pipe Diameter and Length for Power-Vented Installations

Description	Unit Size (MBTUh)	
	150, 200	275, 350, 400
Diameter (Inches (mm))		
Vent pipe	5 (127)	6 (152)
Length (Feet (Meters))		
Minimum	5 (1.5)	
Maximum	50 (15.2)	
Equivalent straight length for 45-degree elbow	2.5 (0.8)*	
Equivalent straight length for 90-degree elbow	5 (1.5)*	
*Reduce by this amount for each elbow.		

Power-Venting Requirements: Joints and Sealing

If using Type B double-wall vent pipe in the vent pipe run (at least half of the equivalent vent length must be vertical), follow the pipe manufacturer's instructions for joining pipe sections. For attaching double-wall pipe to the heater, see **Figure 7**, DETAIL B). If using single wall, 26-gauge or heavier galvanized pipe, secure slip-fit connections using sheet metal screws or rivets. Seal pipe joints either with tape suitable for 550°F (290°C) (PN 98266) or high-temperature silicone sealant. If using Category III vent pipe, follow pipe manufacturer's instructions for joining pipe sections. When attaching Category III pipe to the venter outlet or the vent cap, make secure, sealed joints following a procedure that best suits the style of Category III pipe being used.

- **Connect double-wall (type B) pipe to a vent cap as follows:**
  a. Apply continual 3/8-inch bead of silicone sealant around circumference of vent cap collar (see **Figure 8**, DETAIL A) to prevent any water inside vent cap from running down double-wall pipe.
  b. Before sealant has any time to dry, insert collar on vent cap as far as possible inside inner wall of double-wall pipe (see **Figure 8**, DETAIL B).
  c. Apply additional silicone sealant to fully close any gaps between vent cap and double-wall pipe to prevent water from entering double-wall pipe.
  d. Secure vent cap to double wall pipe by drilling hole and inserting 3/4-inch-long sheet metal screw into vent cap collar (see **Figure 8**, DETAIL C). Do not overtighten screw.

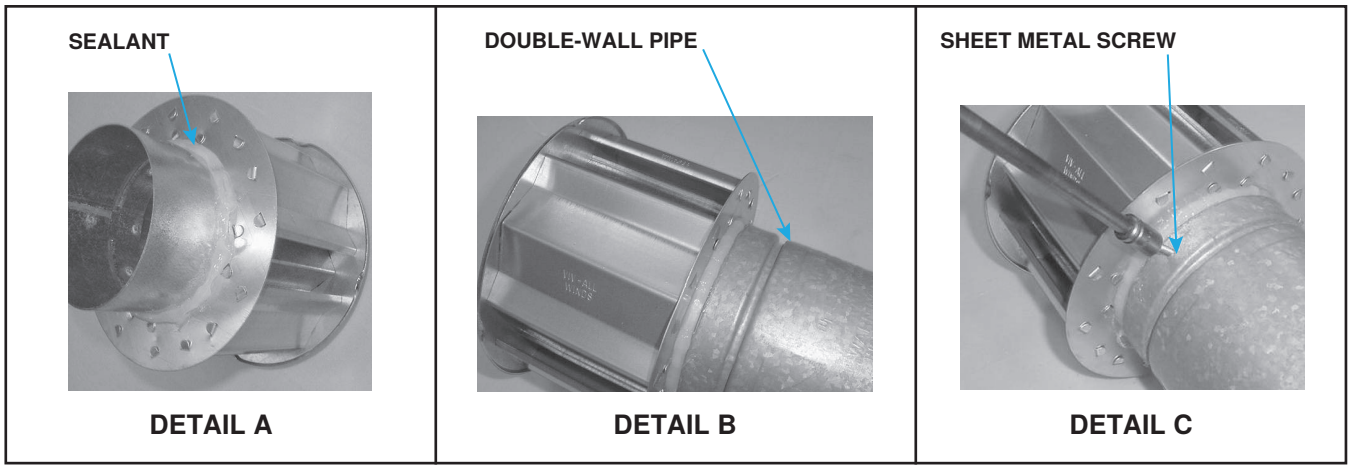

Figure 8. Connecting Double-Wall (Type B) Pipe to Vent Cap

- **Connect double-wall (type B) pipe to a vent cap as follows:**
  a. Apply continual 3/8-inch bead of silicone sealant around circumference of vent cap collar (see **Figure 9**, DETAIL A) to prevent any water inside vent cap from running down double-wall pipe.
  b. Before sealant has any time to dry, insert collar on vent cap as far as possible inside inner wall of double-wall pipe (see **Figure 9**, DETAIL B).
  c. Apply additional silicone sealant to fully close any gaps between vent cap and double-wall pipe to prevent water from entering double-wall pipe.
  d. Secure vent cap to double wall pipe by drilling hole and inserting 3/4-inch-long sheet metal screw into vent cap collar (see **Figure 9**, DETAIL C). Do not overtighten screw.

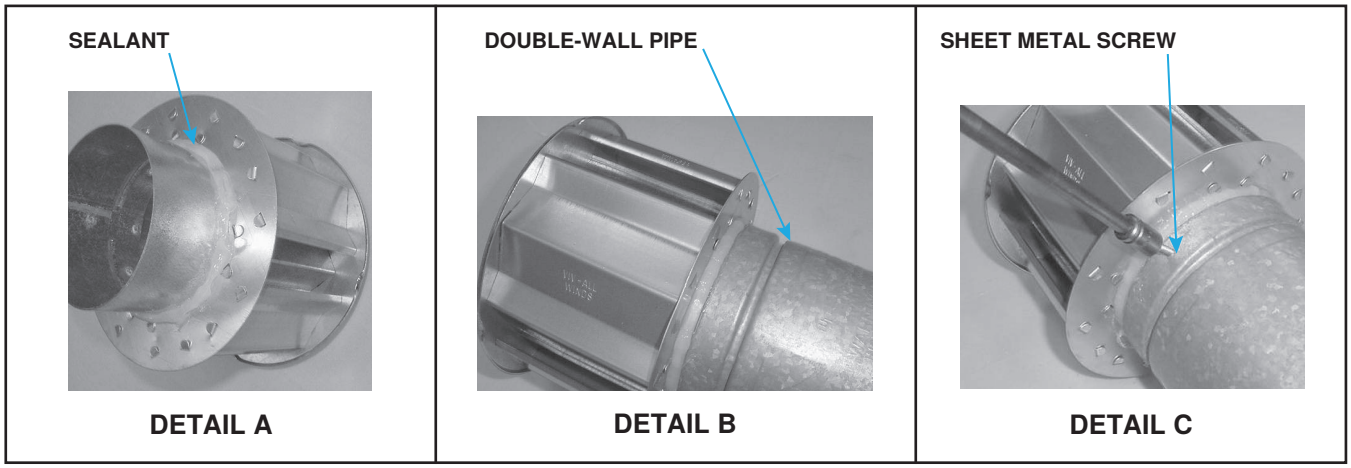

Figure 9. Connecting Double-Wall (Type B) Pipe to Single-Wall or Category III Vent Pipe

Venting/Combustion Air Requirements for Power-Vented Installations—Continued

Power-Venting Requirements: Support

Use non-combustible supports on vent pipe. Support horizontal runs every 6 feet (1.8 meters). Support vertical runs of Type B double-wall or Category III vent pipe in accordance with the requirements of the pipe manufacturer. Support vertical single-wall pipe in accordance with accepted industry practices. Do not rely on the heater for support of either horizontal or vertical vent pipe.

Power-Venting Requirements: Condensation

Any length of single-wall vent pipe exposed to cold air or run through an unheated area or an area with an ambient temperature of 45°F (7°C) or less must be insulated along its entire length with a minimum of 1/2 inch foil-faced fiberglass, 1-1/2# density insulation. Where extreme conditions are anticipated, install a means of condensate disposal.

Power-Venting Requirements: Vent Terminal

The vent system must be terminated with the type of vent cap approved for use with this heater. The vent cap must be the same size as the vent pipe. Use of the vent cap available with the heater (option CC1) is recommended. A different style vent cap could cause nuisance problems or unsafe conditions.

NOTE: The vent terminal pipe may be either single-wall or Type B double-wall.

- **Clearances:** Refer to **Table 13** for horizontal vent terminal clearances.
- **Vent terminal options:** Vent terminals for power-vented installations using the option CC1 vent cap are shown in **Figure 10** (vertical vent configurations) and **Figure 11** (horizontal vent configurations).

NOTE: A vent cap is required. Maintain a clearance of 12 inches (305 mm) from the wall to the vent terminal cap for stability under wind conditions.

Table 13. Minimum Clearance Requirements for Horizontal Vent Terminal

Component/Structure	Minimum Clearance, All Directions Unless Specified (Feet (Meters))
Forced air inlet within 10 feet (3.1 meters)*	3 (0.9) above
Combustion air inlet of another appliance	6 (1.8)
Mechanical air supply inlet to any building	Canada: 6 (1.8)
Any building opening (door, window, or gravity air inlet)	4 (1.2) horizontal and below
	1 (0.3) above
Gas meter,** electric meter, and relief equipment	US: 4 (1.2) horizontal
	Canada: 6 (1.8) horizontal
Gas regulator**	US: 3 (0.9) horizontal
	Canada: 6 (1.8) horizontal
Adjoining building or parapet	6 (1.8)
Adjacent public walkway	7 (2.1) above
Grade (ground level)	3 (0.9) above
*Does not apply to the inlet of a direct vent appliance.	
**Do not terminate the vent directly above a gas meter or service regulator.	

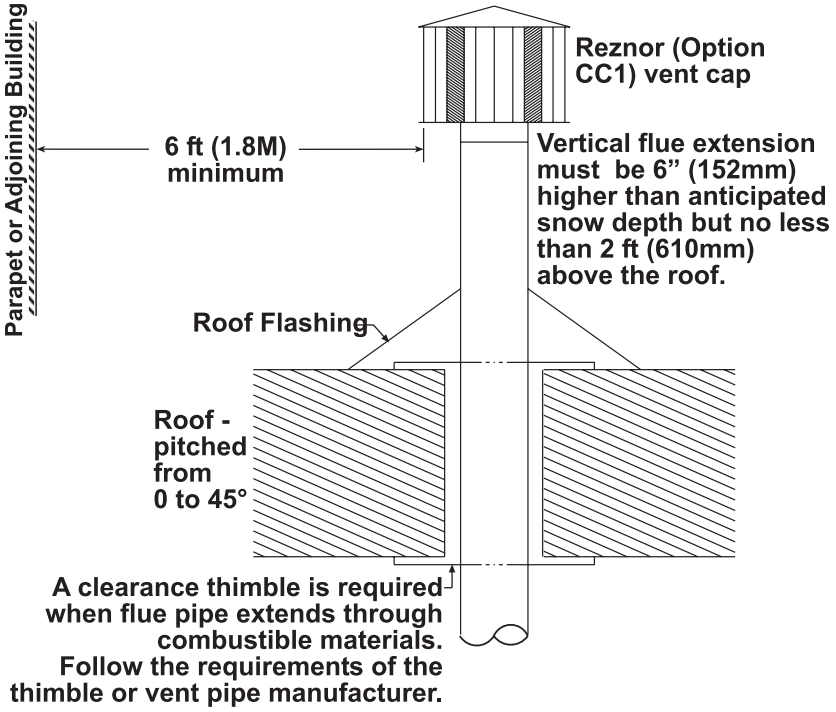

SINGLE-WALL VENT RUN AND SINGLE-WALL TERMINAL

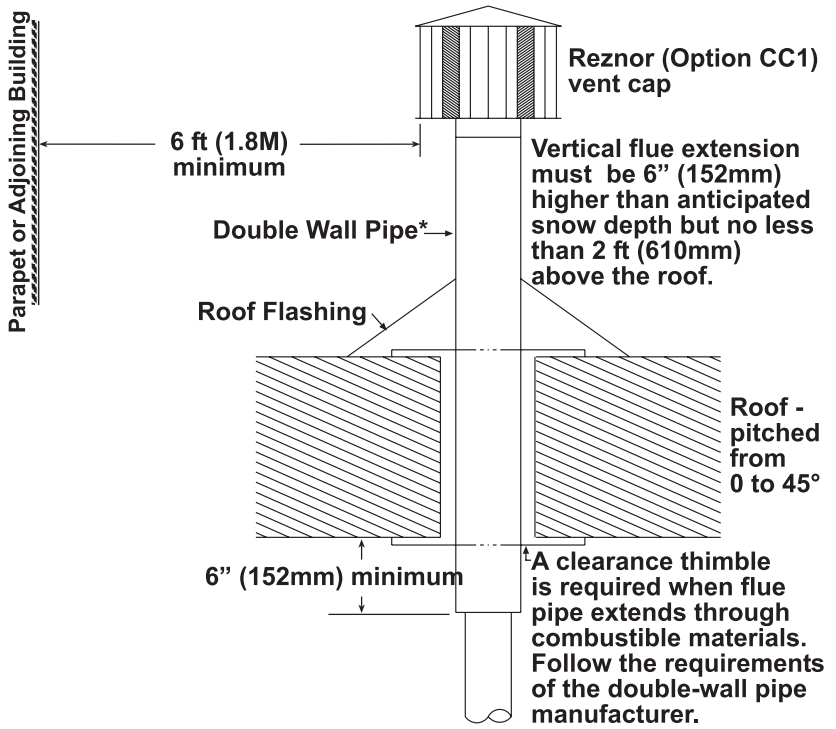

SINGLE-WALL VENT RUN AND DOUBLE-WALL TERMINAL

Figure 10. Vertical Vent Terminal—Power-Vented Installations

Venting/Combustion Air Requirements for Power-Vented Installations—Continued

Power-Venting Requirements: Vent Terminal—Continued

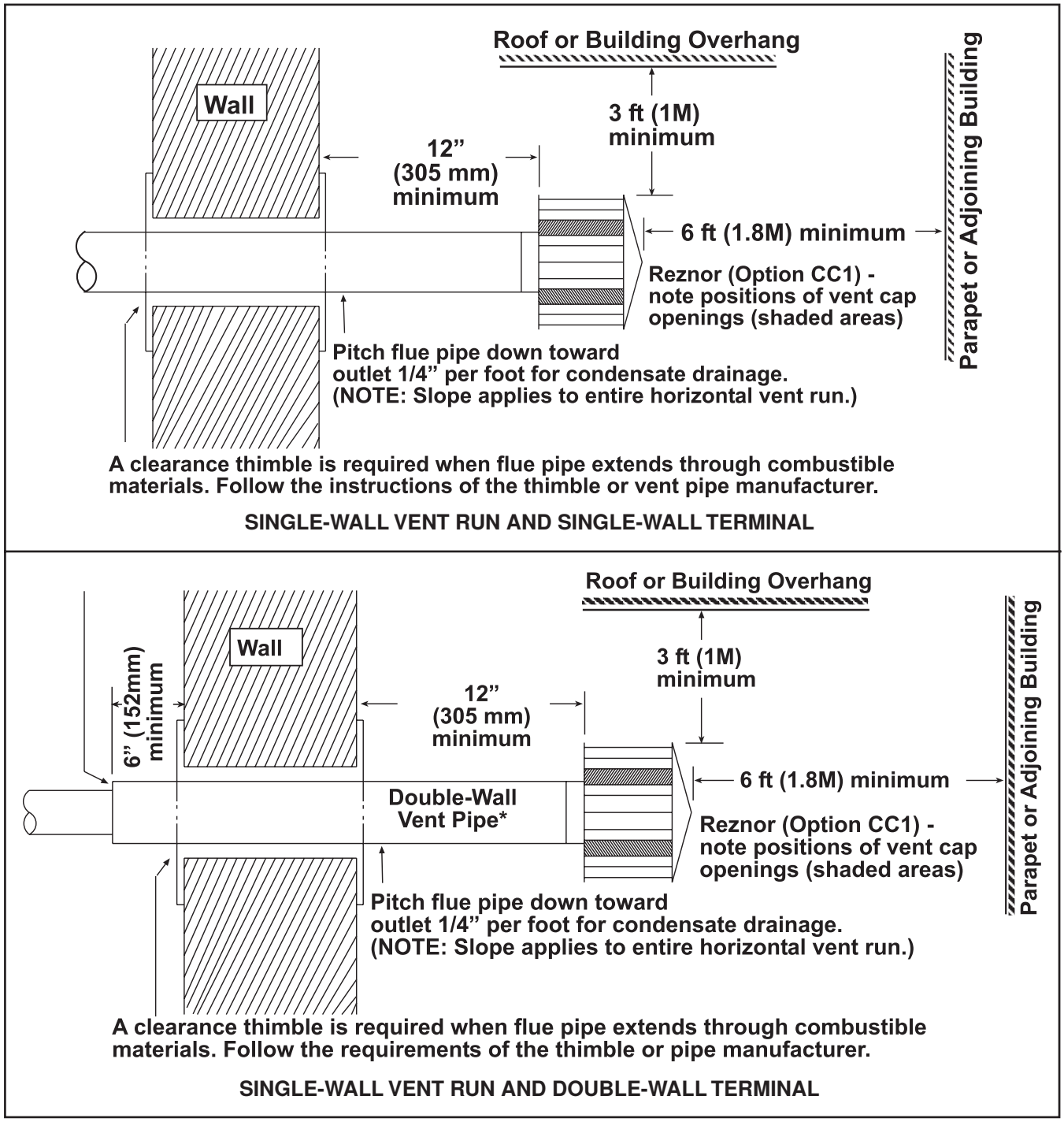

Figure 11. Horizontal Vent Terminal—Power-Vented Installations

Venting/Combustion Air Requirements for Separated-Combustion Installations

The venter outlet and combustion air pipe collars are shown in **Figure 12**. A minimum length of 12 inches (305 mm) of straight pipe is always required at the venter outlet. For the combustion air inlet collar, use tin snips or aviation shears to cut out the hole in the top of the heater (refer to **Table 14**). Insert the pipe down through the hole and attach it to the collar inside the heater. Seal the joint. Larger size heaters have oval collars. If the collar is oval, form the pipe to fit the collar.

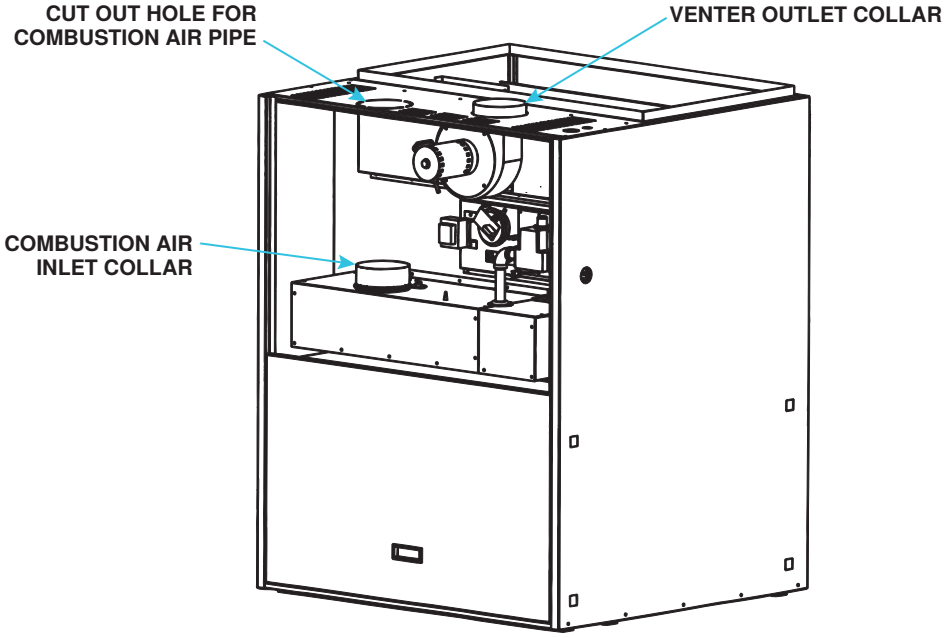

Figure 12. Venter Outlet and Combustion Air Pipe Collars

Table 14. Venter Outlet and Combustion Air Inlet Diameter

Collar	Unit Size (MBTUh)	
	150, 200	275, 350, 400
	Inches (mm)	
Venter outlet	5 (127)	6 (152)
Combustion air inlet		

Separated-Combustion Requirements: Piping

All pipe is field-supplied. Requirements for both the vent pipe and the combustion air inlet pipe are as follows:

- **Vent pipe:** Vent pipe approved for a Category III appliance OR single-wall, 26-gauge or heavier galvanized (or a material of equivalent durability and corrosion resistance) vent pipe is required between the heater and the concentric adapter box. Type B double-wall vent pipe is required for the vent terminal section. The length of vent pipe that extends through the box and runs concentric through the combustion air pipe must be one piece with no joints.
- **Combustion air pipe:** Sealed, single-wall galvanized pipe is recommended for combustion air.
- **Clearance:** Do not enclose the vent pipe or place pipe closer than 6 inches (152 mm) to combustible material.
- **Pipe length and diameter:** Vent pipe diameters and maximum indoor vent lengths apply to both horizontal and vertical vents. Pipe diameter and length requirements are listed in **Table 15**.

NOTE: Add all straight sections and equivalent lengths for elbows. The total length of the straight sections and elbows must not exceed the maximum length.

Venting/Combustion Air Requirements for Separated-Combustion Installations—Continued

Separated-Combustion Requirements: Piping—Continued

Table 15. Vent Pipe Diameter and Length for Separated-Combustion Installations

Type	Description	Unit Size (MBTUh)	
		150, 200	275, 350, 400
Diameter (Inches (mm))			
Pipe from heater to concentric adapter box	Vent pipe	5 (127)	6 (152)
	Inlet air pipe		
Concentric (outdoor terminal) pipes	Vent pipe	4 (102)	5 (127)
	Inlet air pipe	6 (152)	8 (203)
Length (Feet (Meters))			
Pipe from heater to concentric adapter box	Minimum	5 (1.5)	
	Maximum	40 (12.2)	50 (15.2)
	Equivalent straight length for 45-degree elbow	2.5 (0.8)	
	Equivalent straight length for 90-degree elbow	5 (1.5)	

Separated-Combustion Requirements: Joints and Sealing

Seal pipe joints as follows:

a. **To seal joints in Category III vent pipe:** Follow the pipe manufacturer's instructions for joining and sealing Category III vent pipe sections.

b. **To seal joints in single-wall vent or combustion air pipe:** Secure slip-fit pipe connections using sheet metal screws or rivets. Seal all joints with aluminum tape or silicone sealant.

c. **To seal the joint in two terminal sections of double-wall vent pipe in a vertical vent:** Follow the pipe manufacturer's instructions for joining and sealing double-wall vent pipe sections.

d. **To seal the joint between the terminal section of double-wall vent pipe and a single-wall or Category III vent pipe:** follow the illustrated step-by-step instructions in **Figure 9**. Make this connection no more than 6 inches (152 mm) from the concentric adapter box.

e. **To seal the joint between the terminal section of double-wall vent pipe and the vent cap:** Follow the illustrated step-by-step instructions in **Figure 8**.

Separated-Combustion Requirements: Support

Support horizontal runs every 6 feet (1.8 meters). Support vertical runs of Type B double-wall or Category III vent pipe in accordance with the requirements of the pipe manufacturer. Support single-wall vertical pipe in accordance with accepted industry practices. Do not rely on the heater or the adapter box for support of either horizontal or vertical pipes. Use noncombustible supports on vent pipe.

NOTE: The double-wall vent terminal pipe does not attach to the concentric adapter box and must be supported during installation.

Separated-Combustion Requirements: Condensation

Any length of single-wall vent pipe exposed to cold air or run through an unheated area or an area with an ambient temperature of 45°F (7°C) or less must be insulated along its entire length with a minimum of 1/2 inch foil-faced fiberglass 1-1/2# density insulation. Where extreme conditions are anticipated, install a means of condensate disposal.

Separated-Combustion Requirements: Concentric Adapter Box

The concentric adapter box is included in the vent/combustion air kit. Installation instructions depend on whether the vent system is horizontal (option CC6) or vertical (option CC2). All separated-combustion installations require a concentric adapter box as shown in **Figure 13**.

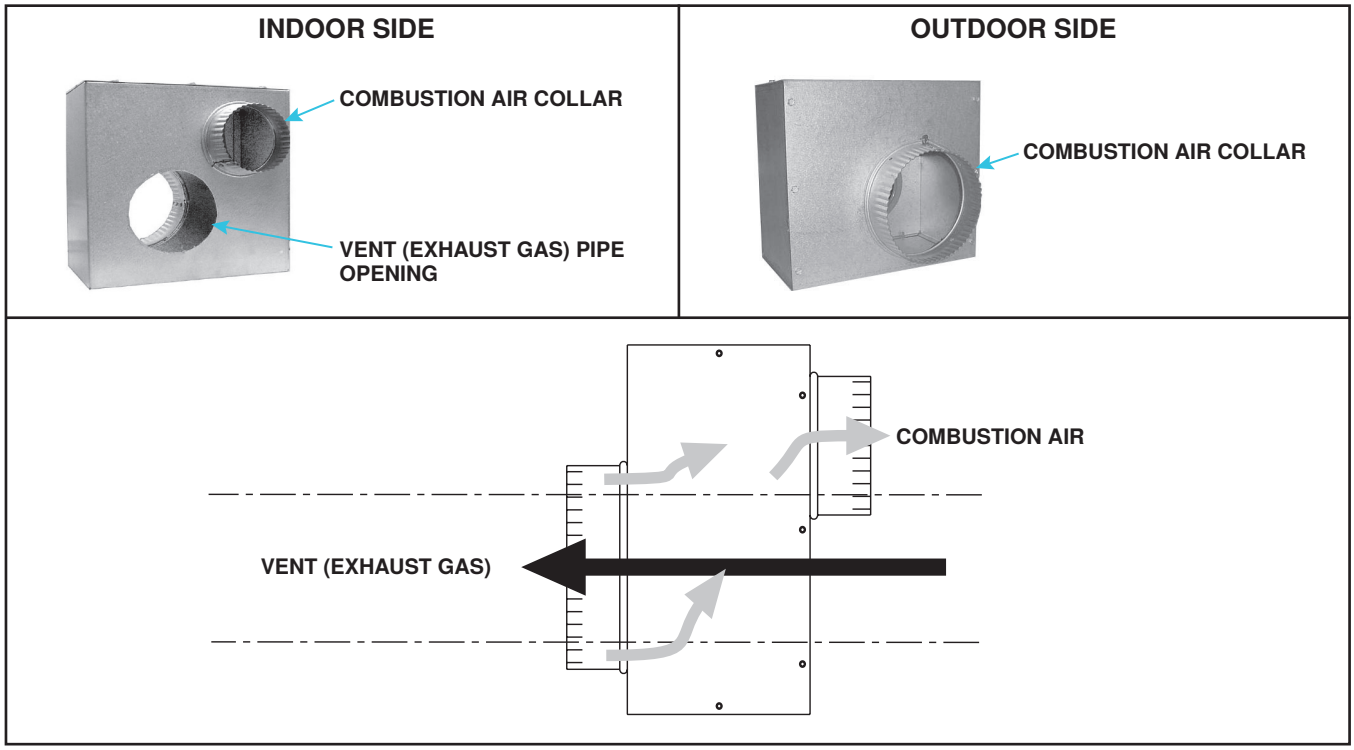

Figure 13. Concentric Adapter Box

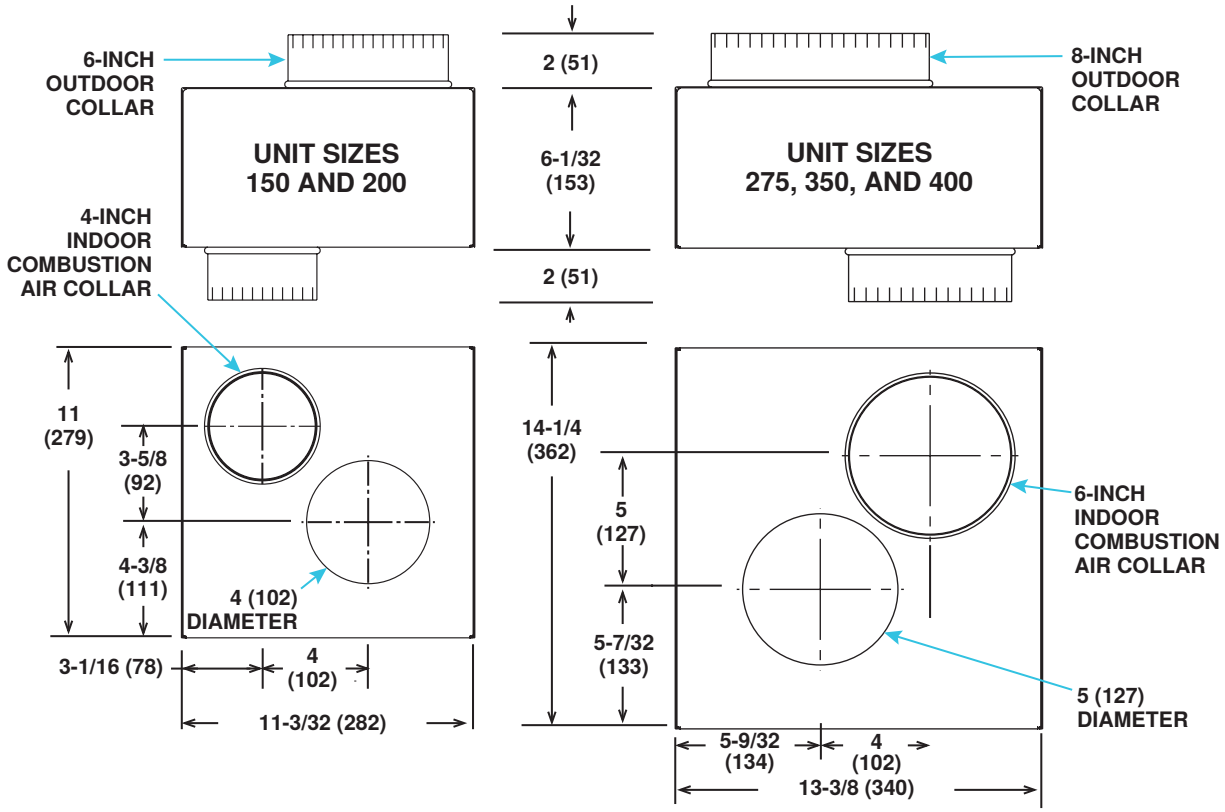

Figure 14. Concentric Adapter Box Dimensions

Venting/Combustion Air Requirements for Separated-Combustion Installations—Continued

Separated-Combustion Requirements: Concentric Adapter Box Connections

When pipe diameters differ, depending on the direction of airflow, join the pipes with either a taper-type reducer or increaser. Requirements vary depending on the unit size. The connection requirements are the same for both vertical and horizontal systems, but the length of pipe required varies by installation.

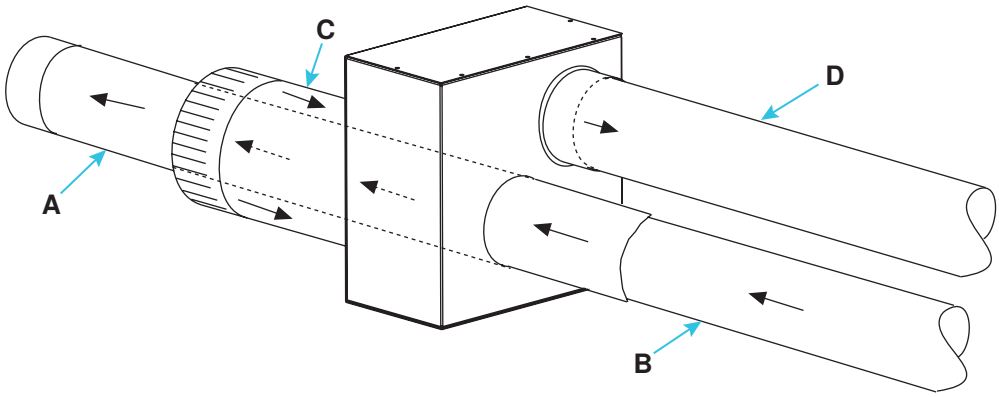

Figure 15. Concentric Adapter Box Connections (Refer to Table 16)

Table 16. Concentric Adapter Box Pipe Sizes

Unit Size (MBTUh)	Vent Pipe		Combustion Air Pipe	
	Pipe Diameter (See Figure 15)			
	A	B	C	D
Inches (mm)				
150, 200	4 (102)	5 (127)*	6 (152)	5 (127)***
275, 350, 400	5 (127)	6 (152)**	8 (203)	6 (152)

*Requires a 5–4 inch (127–102 mm) taper-type reducer in the vent pipe installed within 6 inches (152 mm) of the concentric adapter box.

**Requires a 6–5 inch (152–127 mm) taper-type reducer in the vent pipe installed within 6 inches (152 mm) of the concentric adapter box.

***Requires a 4–5 inch (102–127 mm) taper-type increaser in the combustion air pipe.

Separated-Combustion Requirements: Vent Terminal Options

Vent terminal options CC2 (vertical vent configuration) and CC6 (horizontal vent configuration) for separated-combustion installations are shown in **Figure 16**.

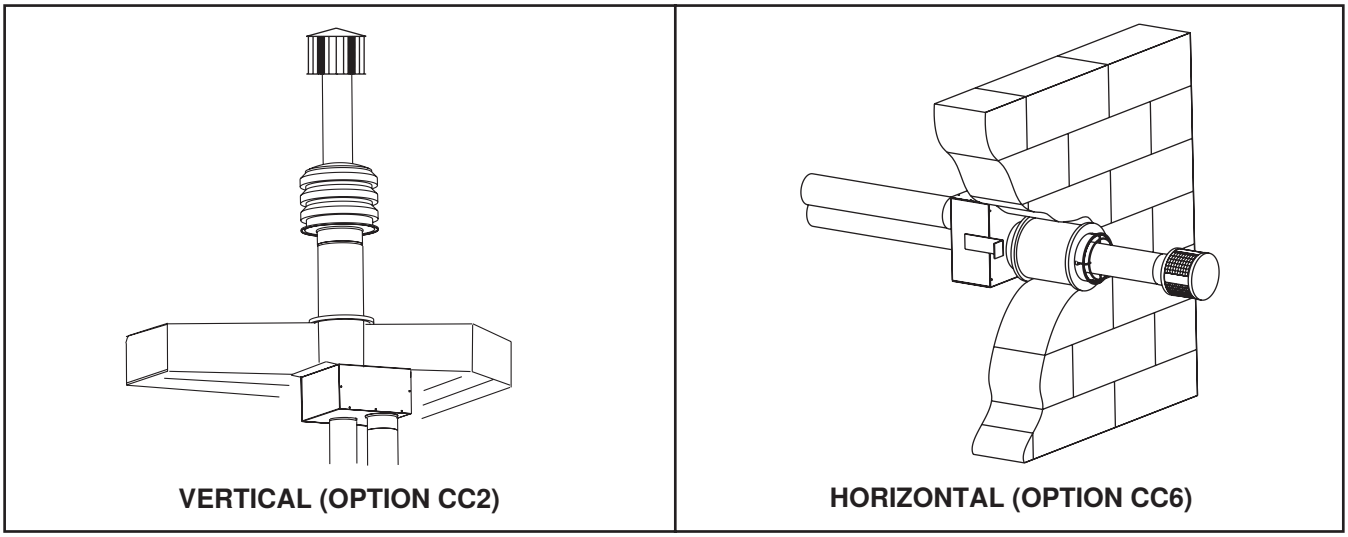

Figure 16. Horizontal and Vertical Venting Options—Separated-Combustion Installations

Vertical Vent Terminal for Separated-Combustion Installations (Option CC2)

- Field-supplied components required for installation of the vertical vent kit are as follows:
  a. Vent and combustion air piping in accordance with **Table 15**
  b. Tapered vent pipe diameter reducers and/or increasers, as required
  c. Thimble (not required if wall is of non-combustible construction)
  d. Flashing
  e. Sheet metal screws, tape, and sealant, as required
- Factory-supplied components for installation of the vertical vent kit are listed in **Table 17**.

Table 17. Vertical Vent Terminal/Combustion Air Package (Option CC2) Components

Unit Size (MBTUh)		Description	Quantity
150, 200	275, 350, 400		
Kit PN			
205895	205896		
Component PN			
205884	205885	Concentric adapter box (see **Figure 13**)	1
110051	110052	Exhaust vent terminal assembly (see **Figure 17**)	1
155635	53330	Combustion air inlet assembly (see **Figure 17**)	1
207232		Concentric adapter box bracket	2
53335		High-temperature silicone sealant, tube	1

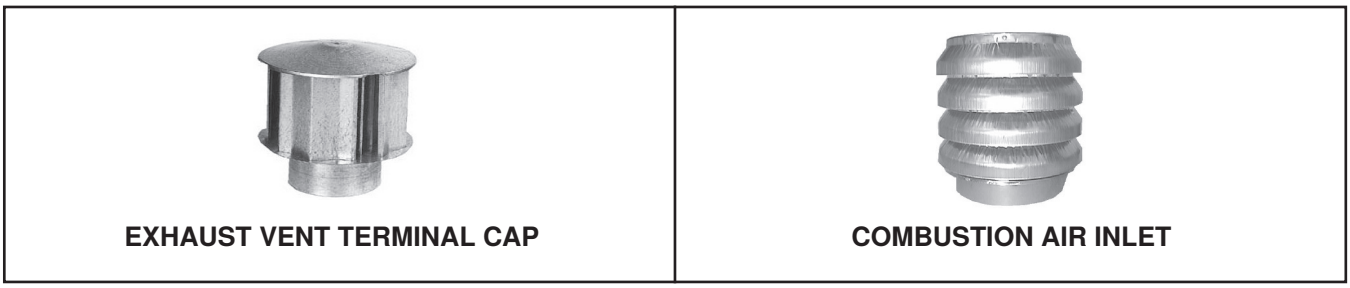

Figure 17. Option CC2 Components

Venting/Combustion Air Requirements for Separated-Combustion Installations—Continued

Vertical Vent Terminal for Separated-Combustion Installations (Option CC2)—Continued

⚠ DANGER ⚠

To prevent combustion products from entering the occupied space, all vent terminals must be positioned or located away from fresh air intakes, doors, and windows. Failure to comply could result in severe personal injury or death and/or property damage.

1. Determine vent terminal location on roof:
   a. If more than one vertical vent terminal is being installed, minimum spacing between vent center lines is determined by minimum outdoor design temperature (coldest outdoor condition at installation site). Refer to **Table 18** to ensure that location complies with minimum outdoor design temperature requirements.
   b. Select location away from fresh air intakes, allowing space for concentric adapter box inside. Vent terminal must be located away from adjacent buildings as shown in **Figure 18**.

Table 18. Minimum Spacing Between Center Lines of Vertical Vent Pipes

Minimum Outdoor Design Temperature	Minimum Spacing Between Center Lines of Vertical Vent Pipes (Inches (mm))
≥31°F (≥0°C)	36 (914)
−10 to 30°F (−23 to −1°C)	60 (1524)
< −10°F (< −23°C)	84 (2134)

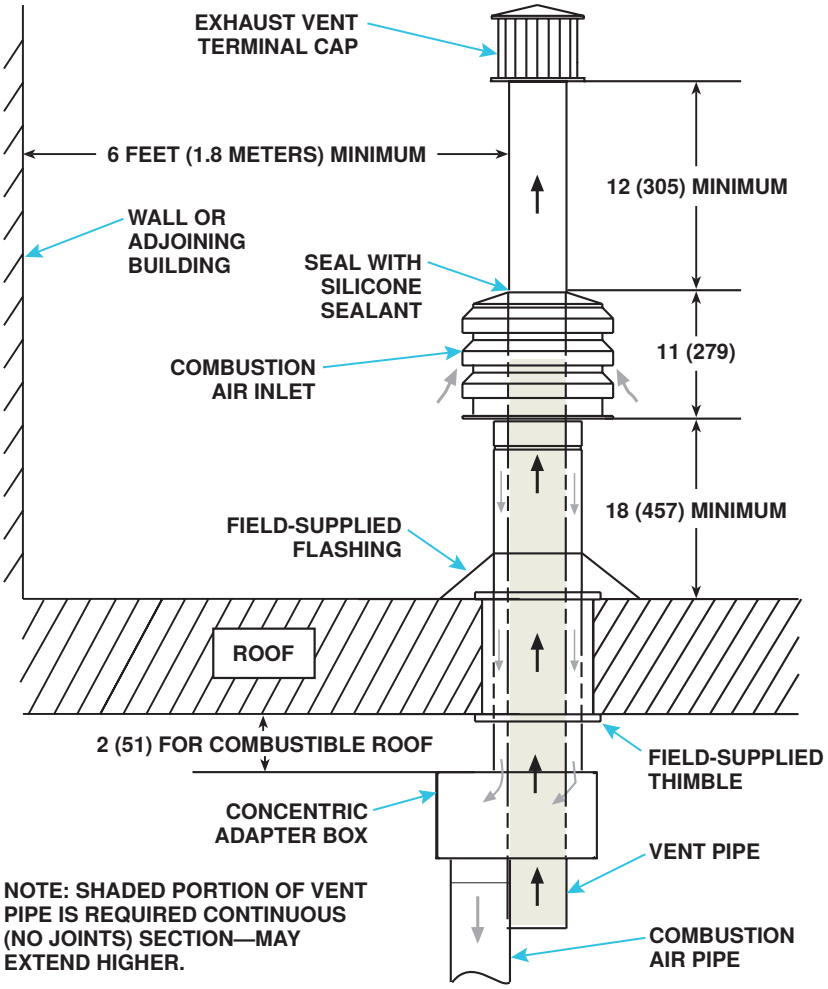

Figure 18. Option CC2 Installation

2. Install vent pipe and combustion air pipe runs:
   a. Connect piping to heater in accordance with specifications listed in **Separated-Combustion Requirements: Piping** section.
   b. Seal all joints in accordance with specifications listed in **Separated-Combustion Requirements: Joints and Sealing** section. Due to high temperature considerations, do not enclose exhaust pipe or place pipe closer than 6 inches (152 mm) to combustible material.
   c. Extend piping runs close to roof at location selected in step 1 and support piping in accordance with specifications listed in **Separated-Combustion Requirements: Support** section.

NOTE: The vent pipe will extend through the roof after the concentric adapter box is installed. The indoor combustion air pipe will end at the box.

3. Cut hole through roof for combustion air pipe:
   a. Ensure that location and orientation of concentric adapter box are correct and mark and cut hole.
   b. Ensure that hole accommodates combustion air pipe—6-inch (152-mm) for unit size 150 or 200 or 8-inch (203-mm) for unit size 275, 350, or 400. Thimble may be required depending on building construction and/or local codes. Larger diameter combustion air pipe serves as clearance for vent pipe on non-combustible construction.
4. Secure longer angles on concentric adapter box brackets (see **Figure 19**) to concentric adapter box.

NOTE: The longer angle of the concentric adapter box bracket has five 7/32-inch holes that allow the position of the bracket on the box to be adjusted. The shorter angle has three 7/32-inch holes that allow adjustment to construction.

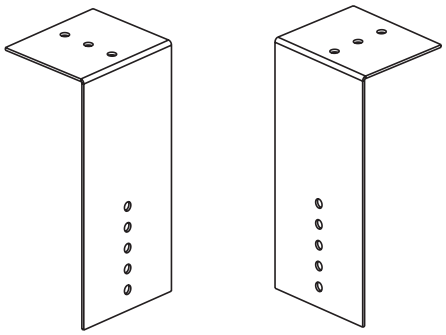

Figure 19. Concentric Adapter Box Brackets

5. Connect outside section of combustion air pipe to concentric adapter box (see **Figure 20**):

⚠ CAUTION ⚠

Ensure that length of combustion air pipe does not *exceed* 48 inches (1,219 mm) or does not extend *less than* 18 inches (457 mm) above roof.

   a. Refer to **Figure 20** to determine length of dimension X as follows:
      (1) Bracket length
      (2) Plus roof thickness
      (3) Plus anticipated snow depth
   b. Second section of double-wall pipe (see dimension Y in **Figure 20**) may be connected as needed to continuous section of vent pipe. Ensure that connection is minimum of 3 inches (76 mm) above combustion air pipe and that height is 12 inches (305 mm) minimum—34 inches (864 mm) in cold climates where design ambient temperature is −10°F (−23°C) or lower.
   c. Secure inlet air pipe to collar of concentric adapter box using sheet metal screws. Seal joint and seam using tape or sealant.

Venting/Combustion Air Requirements for Separated-Combustion Installations—Continued

Vertical Vent Terminal for Separated-Combustion Installations (Option CC2)—Continued

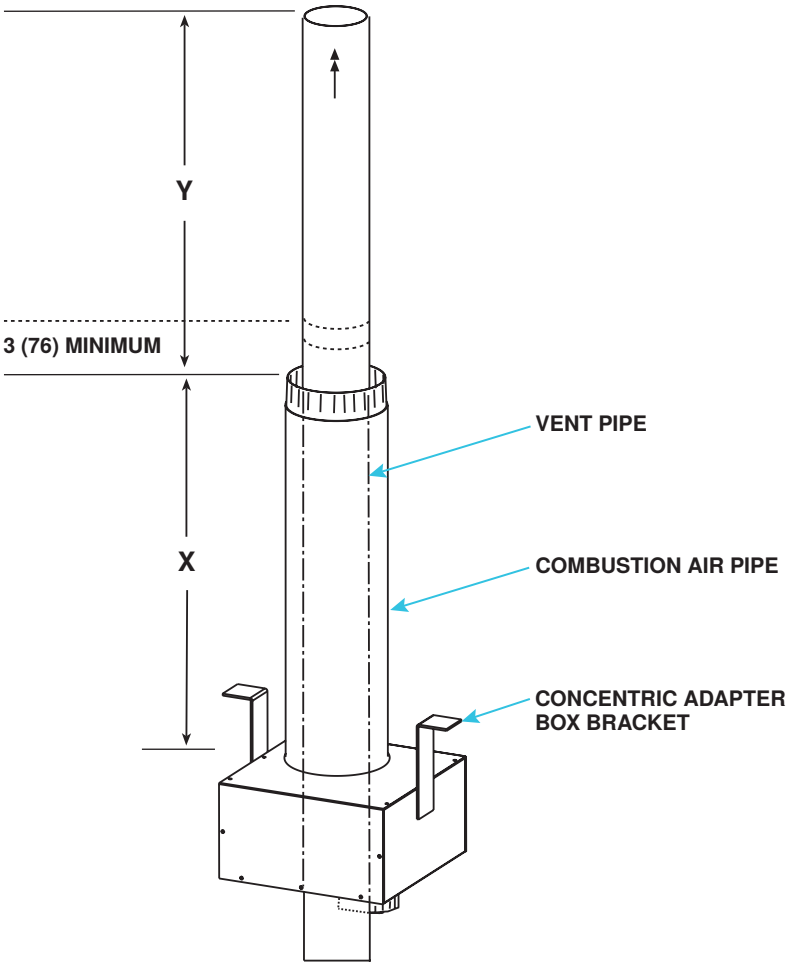

Figure 20. Combustion Air Pipe Installation

6. Secure concentric adapter box to underside of roof (see **Figure 20**):

⚠ CAUTION ⚠

- **If the roof is combustible, ensure that brackets are positioned to allow a 2-inch (51 mm) clearance between the concentric adapter box and the roof.**
- **If any holes are made in the concentric adapter box in error, ensure that they are sealed.**

a. Insert combustion air pipe through roof as shown in **Figure 21**.

b. Position concentric adapter box to match pipe runs and secure short angles of concentric adapter brackets (see **Figure 19**) to underside of roof using field-supplied hardware.

c. Install field-supplied flashing around combustion air pipe on roof outside.

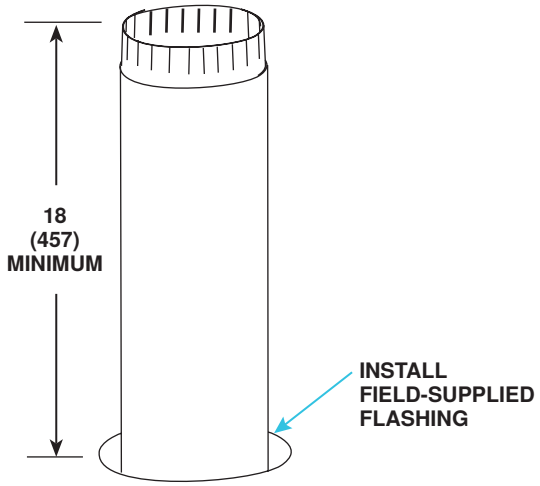

Figure 21. Combustion Air Pipe Through Roof

7. Install double-wall terminal vent pipe:

NOTE: The length of the vent pipe is determined by the installation within maximum and minimum requirements. The vent pipe extending through the box and the inlet air pipe must be one piece of double-wall vent pipe without joints.

a. Refer to **Figure 20** to determine lengths of each pipe segment and to calculate total length required. Determine length by adding requirements:
   (1) Starting at bottom, vent pipe can extend maximum of 6 inches (152 mm) below box
   (2) Plus 6 inches (152 mm) through box
   (3) Plus length of brackets above box
   (4) Plus width of roof
   (5) Plus height of outside combustion air pipe above roof
   (6) Plus mimimum of 3 inches (76 mm) beyond top of inlet air pipe
   (7) Total is mimimum length of vent pipe section—if actual piece of vent pipe is longer, extend it farther above combustion air pipe—do not extend it more than 6 inches (152 mm) below box
b. Ensure that double-wall terminal vent pipe is in proper direction and slide end of pipe into box and out through combustion air pipe. Position vent pipe to lengths determined above.

NOTE: The double-wall vent pipe does not attach to the box. The installer must provide support.

c. Connect double-wall vent pipe to single-wall or Category III vent pipe run using tapered reducer.
d. Seal completely around circumference of pipe and opening of box using silicone sealant.

8. Install combustion air inlet (see **Figure 22**):

⚠ CAUTION ⚠

The combustion air inlet must be at least 6 inches (152 mm) above the anticipated snow depth.

a. Install additional section of vent pipe on outside if needed and make joint in accordance with pipe manufacturer's requirements.
b. With vent pipe at required height, slide combustion air inlet over vent pipe and fasten collar to combustion air pipe using sheet metal screws.
c. Seal opening at top between vent pipe and combustion air inlet to prevent water leakage using silicone sealant.

Venting/Combustion Air Requirements for Separated-Combustion Installations—Continued

Vertical Vent Terminal for Separated-Combustion Installations (Option CC2)—Continued

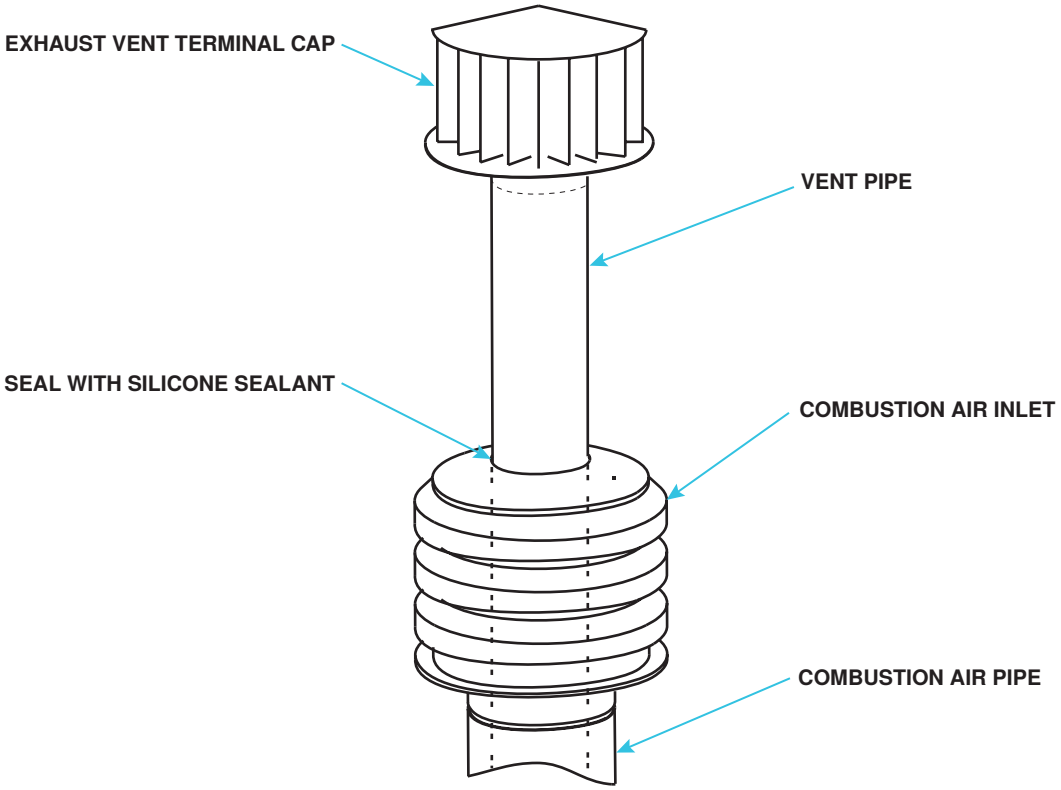

Figure 22. Combustion Air Inlet and Vent Terminal Installation

9. Install exhaust vent terminal (see **Figure 22**) in accordance with **Figure 8**.
10. Install indoor combustion air pipe:
    a. Secure single-wall combustion air pipe run to collar on concentric adapter box using sheet metal screws. For unit sizes 150 and 200, install tapered enlarger.
    b. Seal pipe joints with tape or sealant.
11. Verify compliance with **Figure 18** and with all specific venting requirements listed above.

Horizontal Vent Terminal for Separated-Combustion Installations (Option CC6)

- Field-supplied components required for installation of the horizontal vent kit are as follows:
    a. Vent and combustion air piping in accordance with **Table 15**
    b. Tapered vent pipe diameter reducers and/or increasers, as required
    c. Thimble (not required if wall is of non-combustible construction)
    d. Flashing
    e. Sheet metal screws, tape, and sealant, as required
- Factory-supplied components for installation of the horizontal vent kit are listed in **Table 19**.

Table 19. Horizontal Vent Terminal/Combustion Air Package (Option CC6) Components			
Unit Size (MBTUh)		Description	Quantity
150, 200	275, 350, 400		
Kit PN			
205882	205883		
Component PN			
205884	205885	Concentric adapter box (see **Figure 13**)	1
155096	53316	Assembly, screened exhaust (see **Figure 23**)	1
205893	205894	Inlet guard (see **Figure 23**)	1
37661		Screw, sheet metal, #10-16 × 1/2	4
207232		Concentric adapter box bracket	2
53335		High-temperature silicone sealant, tube	1

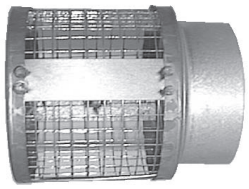

SCREENED EXHAUST ASSEMBLY

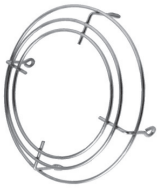

INLET GUARD

Figure 23. Option CC6 Components

⚠ DANGER ⚠

- **To prevent combustion products from entering the occupied space, all vent terminals must be positioned or located away from fresh air intakes, doors, and windows. Failure to comply could result in severe personal injury or death and/or property damage.**
- **In climates with below freezing temperatures, condensate may form icicles on the vent terminal. Locate the terminal where falling icicles do not present a hazard.**
- **Consider local snow depth conditions. The vent must be at least 6 inches (152 mm) above the anticipated snow depth.**

1. Determine vent terminal location on outside wall:
   a. Refer to **Table 15** to ensure that location complies with vent length requirements.
   b. For most applications, ensure that vent terminal is level with heater mounting height.
   c. Allow downward pitch of 1/4-inch per foot (6 mm per 305 mm) for condensate drain.

⚠ WARNING ⚠

Avoid positioning the vent terminal above a walkway as there may be a small amount of condensate that drips from the end of the vent/combustion air terminal. In cold climates, the condensate may form ice.

Venting/Combustion Air Requirements for Separated-Combustion Installations—Continued

Horizontal Vent Terminal for Separated-Combustion Installations (Option CC6)—Continued

d. Ensure that distance of vent terminal from adjacent public walkways and buildings and window and building openings complies with local codes. Absent any local codes, distance must comply with National Fuel Gas Code Z223.1.

⚠ CAUTION ⚠

Products of combustion can cause discoloration of some building finishes and deterioration of masonry materials. A clear silicone sealant normally used to protect concrete driveways may be used to protect masonry materials from discoloration and deterioration. If discoloration is an esthetic problem relocate the vent or install a vertical vent.

e. Refer to **Table 13** to ensure that location complies with minimum clearance requirements.

2. Install vent pipe and combustion air pipe runs:
   a. Connect piping to heater in accordance with specifications listed in **Separated-Combustion Requirements: Piping** section.
   b. Seal all joints in accordance with specifications listed in **Separated-Combustion Requirements: Joints and Sealing** section. Due to high temperature considerations, do not enclose exhaust pipe or place pipe closer than 6 inches (152 mm) to combustible material.
   c. Extend piping runs close to wall at location selected in step 1 and support piping in accordance with specifications listed in **Separated-Combustion Requirements: Support** section.
3. Cut hole through outside wall for combustion air pipe.
   a. Ensure that outside wall construction thickness is between 1 inch (25 mm) minimum and 48 inches (1,219 mm) maximum.
   b. Ensure that hole accommodates combustion air pipe—6-inch (152-mm) for unit size 150 or 200 or 8-inch (203-mm) for unit size 275, 350, or 400. Thimble may be required depending on building construction and/or local codes. Larger diameter combustion air pipe serves as clearance for vent pipe on non-combustible construction.
4. Secure longer angles on concentric adapter box brackets (see **Figure 24**) to concentric adapter box.

NOTE: The longer angle of the concentric adapter box bracket has five 7/32-inch holes that allow the position of the bracket on the box to be adjusted. The shorter angle has three 7/32-inch holes that allow adjustment to construction.

5. Connect outside section of combustion air pipe to concentric adapter box (see **Figure 24**):
   a. Determine length of combustion air pipe as follows:
      (1) Bracket length from box to wall
      (2) Plus wall thickness
      (3) Plus 2 inches (51 mm) beyond wall
   b. Secure inlet air pipe to collar of concentric adapter box using sheet metal screws. Seal joint and seam using tape or sealant.

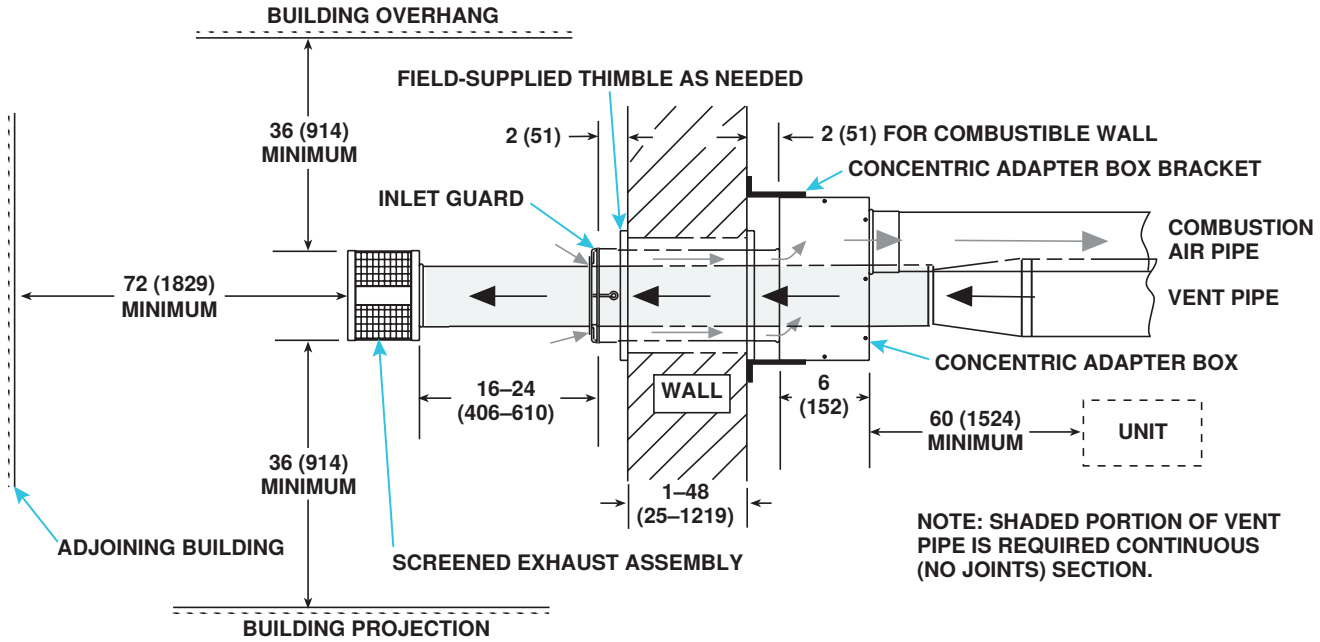

Figure 24. Option CC6 Installation

6. Secure concentric adapter box to wall (see **Figure 24**):

⚠ CAUTION ⚠

- **If the wall is combustible, ensure that brackets are positioned to allow a 2-inch (51 mm) clearance between the concentric adapter box and the wall.**
- **If any holes are made in the concentric adapter box in error, ensure that they are sealed.**

   a. Insert combustion air pipe out through wall.
   b. Secure short angles (see **Figure 24**) of concentric adapter box brackets to wall.
   c. Seal or flash inlet air pipe on outside using sealant and/or field-supplied flashing.

7. Install inlet guard:
   a. Position inlet guard over end of combustion air pipe in accordance with **Figure 24**.
   b. Secure air inlet guard to inlet air pipe using four 1/2-inch-long screws provided.

NOTE: If vent pipe is inserted from outside, the exhaust cap may be attached before the double-wall vent pipe is installed. If cap is attached first, ensure that the baffle strips are positioned correctly when attaching the vent terminal pipe to the vent run (refer to step 8d below).

8. Install double-wall terminal vent pipe:

NOTE: The length of the vent pipe is determined by the installation within maximum and minimum requirements. The vent pipe extending through the box and the inlet air pipe must be one piece of double-wall vent pipe without joints.

   a. Refer to **Figure 24** to determine lengths of each pipe segment and to calculate total length required. Transition to single-wall or Category III vent pipe run must be made maximum of 6 inches (152 mm) from heater side of box.
   b. Ensure that double-wall terminal vent pipe is in proper direction and slide end of pipe through box. Position pipe so that it will extend between 16–24 inches (406–610 mm) past end of combustion air pipe and no more than 6 inches (152 mm) out of box toward heater.

Venting/Combustion Air Requirements for Separated-Combustion Installations—Continued

Horizontal Vent Terminal for Separated-Combustion Installations (Option CC6)—Continued

NOTE: The double-wall vent pipe does not attach to the box. The installer must provide support.

c. Connect double-wall vent pipe to single-wall or Category III vent pipe run. For unit sizes 150, 200, 275, 350, and 400, a taper-type reducer is required (see **Figure 9**).

d. Ensure that screened exhaust assembly is aligned so that its baffles are positioned at 12, 3, 6, and 9 o'clock (see **Figure 24**). Install screened exhaust in accordance with **Figure 8**.

e. Ensure that double-wall section of vent pipe has slight downward drop of 1/4-inch per foot (6 mm per 305 mm) toward vent terminal end.

f. Seal completely around circumference of pipe and opening of box using silicone sealant.

9. Install indoor section of combustion air pipe:

a. Secure single-wall combustion air pipe run to collar on concentric adapter box using sheet metal screws. For unit sizes 150 and 200, install tapered enlarger.

b. Seal pipe joints with tape or sealant.

10. Verify compliance with **Figure 24** and with all specific venting requirements listed above.

CONTROLS

NOTE: Refer to the TROUBLESHOOTING section for probable causes and reset instructions for the following controls.

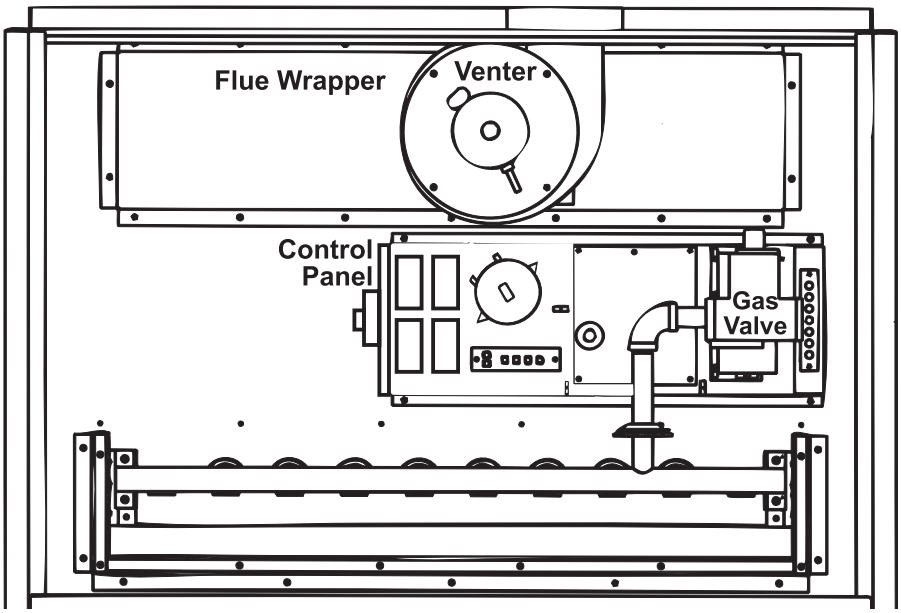

Figure 25. Control Locations

Standard Controls

Combustion Air Proving Switch

⚠ DANGER ⚠

Safe operation requires proper venting flow. Never bypass the combustion air proving switch or attempt to operate the unit without the venter running and proper flow in the vent system. Hazardous conditions could result.

- The combustion air proving switch is a pressure-sensitive switch that monitors air pressure to ensure that proper combustion air is available. The switch is single pole/double throw with the normally open contacts closing when proper airflow is sensed in the system.
- At startup when the furnace is cold, the sensing pressure is at the most negative level. As the furnace and the flue system warm up, the sensing pressure becomes less negative. After the system has reached equilibrium (approximately 20 minutes), the sensing pressure levels off. If a restriction or if excessive flue length or turns cause the sensing pressure to become less than the switch setpoint, the pressure switch will function to shut off the main burners. The main burners will remain off until the system has cooled and/or the flue system resistance is reduced. Refer to **Table 20** for approximate water column negative pressure readings and combustion air proving switch setpoints for sea level operating conditions (standard settings apply to 0–4,000 feet elevation (US) or 0–2,000 feet elevation (Canada)).

Table 20. Combustion Air Proving Switch Settings

Unit Size (MBTUh)	Startup Cold	Equilibrium	Setpoint OFF	Setpoint ON
	IN WC			
150	1.45	1.05	0.75	0.90
200	1.50	1.05		
275	1.10	1.05	0.70	0.85
350	1.30	1.05	0.75	0.90
400	1.20	1.00		

Flame Rollout Switch

The flame rollout switch is a temperature-activated manually reset, limit switch. The switch is mounted on the side of the burner box in a position that senses temperature in a central horizontal location at the rear of the burner assembly. If the flame rollout switch activates to shutdown the heater, the cause must be corrected.

Limit Control

The limit control is a temperature-sensitive safety device that shuts down the gas valve if a temperature above the setpoint is sensed. The limit control is an automatic-reset type with a capillary sensor. When the temperature drops below the setpoint, the limit control deactivates to allow operation of the heater. The capillary sensor extends across the heat exchanger section of the unit to sense the temperature of the discharge air.

Combination Gas Valve

⚠ WARNING ⚠

The combination gas valve is the prime safety shutoff. To ensure positive closure, all gas supply lines must be free of dirt or scale before connecting them to the unit.

The combination gas valve automatically controls the gas flow to the main burners and regulates the gas pressure. The gas valve is powered by the 24V control circuit through the thermostat and safety controls. The diaphragm-type valve provides regulated gas flow pre-set at the factory.

Standard Controls—Continued

Ignition System

- A model CAUA heater is equipped with a direct-spark integrated-control system. The system monitors the safety devices and controls the operation of the blower and venter motors and the gas valve.
- **Ignition control module:** The ignition control module is an integrated board located in the control compartment. Supply and control wiring connects into the control module. The module's LEDs identify operating problems. The control module also acts as a fan control energizing the fan 30 seconds after ignition and delaying fan shutdown for 160 seconds after the gas valve closes. This control is on units manufactured ***after*** FEB 2009. To replace an ignition control module on a unit manufactured ***before*** MAR 2009, order kit PN 258251. Refer to **Table 21** for fan delay DIP switch settings.
- **Ignitor:** The ignitor is located on the right side of the burner assembly. The 1/8-inch spark gap must be maintained.
- **Flame sensor:** The flame sensor is located on the left side of the burner assembly.

Table 21. Fan Delay DIP Switch Settings

DIP Switch		Fan Delay to OFF (Seconds)
SW1	SW2	
ON/OFF*		
OFF	OFF	120
OFF	ON	90
ON	OFF	160 (factory-set)
ON	ON	45

*Selected prior to call for heat.

Belts, Blowers, and Drives

- Model CAUA units are equipped with either direct-drive motor(s) and blower(s) or adjustable belt-drive blower(s) and motor. All direct-drive blower motors are 1-Horsepower (HP). Unit sizes 150–200 have a single motor, unit size 150 has a 12-9 blower, and unit size 200 has a 12-12 blower. Unit sizes 275–400 have dual motors with dual 12-9 blowers. The motor HP on a belt-drive unit is whatever was specified on the order ranging in size from 1/3- to 5-HP. Check the heater rating plate and the motor rating plate.
- The blower motor and blower are located in the blower compartment at the bottom of the heater. The blower compartment door is equipped with a safety switch. If the door is not closed, the heater will not operate.
- The function of the motor and drive is to provide airflow through the heat exchanger and supply air to the space.

Blower Compartment Door Switch

The blower compartment door is equipped with a safety switch. If the door is not closed securely, the heater will not operate.

Venter Assembly

The venter assembly provides a metered flow of combustion air to the burner and exhausts the products of combustion to the outside atmosphere.

Optional Controls

Thermostat

A thermostat is not standard equipment but is an installation requirement. Use either an optional thermostat available with the heater or a field-supplied 24V thermostat. Install according to the thermostat manufacturer's instructions. Ensure that the heat anticipator setting on the thermostat is in accordance with the amperage value listed on the wiring diagram of the heater.

Two-Stage Makeup Air with Ductstat (Option AG3)

NOTE: This option is available only when the heater is equipped with makeup air option AD4.

Two-stage makeup air units are equipped with a two-stage gas valve, but instead of control from a two-stage room thermostat, the outlet air temperature is monitored and controlled by a two-stage ductstat. The ductstat with attached capillary tube senses the discharge air temperature and operates the two stage valve to maintain the temperature within a fixed differential of 2.5°F (1.4°C). Adjustable factory setting is 70°F (21°C). The ductstat is factory-mounted in the control compartment of the heater and has a capillary that must be field-installed. To complete the installation, uncoil the tubing, extend the capillary, and mount it in the ductwork. Follow the instructions provided by the ductstat manufacturer.

Mixing Box Inlet Air Dampers (Options GA6 and GA8)

Dampers and controls are located in the optional outside air/return air mixing box (potentiometer may be remotely located). Dampers operate in response to controls.

- **Return air controller:** The return air controller senses the temperature of the incoming return air. On a two-position outside air damper system, it activates the motor to open and close the outside air damper. On a modulating system, the return air controller maintains 100% return air until the set temperature is reached at which point the mixed air controller (with or without potentiometer) controls the dampers based on the mixed air control setting. When in the heating mode, the temperature of the mixed return and outside air entering a standard model CAUA heater must always be 35°F (2°C) or above. Only when the heater is factory-equipped with makeup air option AD4 can the entering air temperature be below 35°F (2°C).
- **Mixed air controller:** The mixed air controller senses the temperature of the air entering the heater. It automatically operates the damper motor to modulate the outside and return air dampers based on the temperature setting. When in the heating mode, the temperature of the mixed return and outside air entering a standard model CAUA heater must always be 35°F (2°C) or above. Only when the heater is factory-equipped with makeup air option AD4 can the entering air temperature be below 35°F (2°C).
- **Enthalpy sensor for two-position control:** The enthalpy control senses the enthalpy (heat content in 1 pound of air) of the outside air entering the heater. When the enthalpy is low, the control activates the motor to open the outside air damper; when high, it closes the outside air damper.
- **Enthalpy sensors for modulating control:** There are two enthalpy sensors, one for outside air and one for return air. Input from the two enthalpy sensors and the thermistor sensor to the logic module on the motor allow the motor to modulate the dampers to maintain the set temperature and control the moisture of the air entering the heater.

Two-Position Damper Motor (Option GB2)

The two-position damper motor opens and closes the dampers. Damper position is either on when the unit is operating or is determined by a two-position enthalpy control.

Modulating Damper Motor (Option GB4)

The modulating damper motor actuates the dampers in response to a potentiometer or a mixed air controller. Outside air dampers close when the heater shuts down.The potentiometer is a manually set switch used with modulating dampers to set a minimum outside air damper opening. It is either mounted in the mixing box or remotely located. The modulating damper motor actuates the dampers in response to enthalpy controls for cooling or a mixed air controller for heating. Outside air dampers close when the heater shuts down.

OPERATION

Pre-Startup Checklist

⚠ CAUTION ⚠

IMPORTANT: Before applying power, check the blower pulley, blower wheel, and motor pulley to ensure that they are secure to the shaft. Check blower and pulleys for free movement.

- ❑ Verify clearances from combustibles (refer to **Clearances** section).
- ❑ If unit is installed as separated-combustion unit, verify that vent/combustion air system is installed in accordance with **Venting/Combustion Air Requirements for Separated-Combustion Installations** section.
- ❑ Check piping for leaks and proper gas line pressure. Bleed gas lines of trapped air (refer to **Supply Piping Connections** section).
- ❑ Check blower compartment to ensure that all shipping supports have been removed.
- ❑ Check belt tension and alignment.
- ❑ Securely close blower compartment door—heater will not operate if blower compartment door is not closed.
- ❑ Check electrical wiring—ensure that all wire gauges are as recommended.
- ❑ A service disconnect switch should be used.
- ❑ Verify that fusing or circuit breakers are adequate for load use.
- ❑ If unit is equipped with mixing box with both return and outside air dampers, verify that damper linkage has been adjusted (refer to mixing box installation manual found at **www.reznorhvac.com**).
- ❑ If unit is equipped with flue wrapper condensate drain, verify that condensate lines are connected and that drain traps are filled with clean water.

Startup

⚠ DANGER ⚠

- **For your safety, read before operating. If you do not follow these instructions exactly, a fire or explosion may result causing property damage, personal injury, or loss of life.**
- **This appliance does not have a pilot. It is equipped with an ignition device which automatically lights the burner. Do not try to light the burner by hand.**
- **Before operating, smell all around the appliance area for gas. Be sure to smell next to the floor because some gas is heavier than air and will settle on the floor.**
- **If you smell gas:**
  - **a. Open windows.**
  - **b. Don’t touch electrical switches.**
  - **c. Extinguish any open flame.**
  - **d. Immediately call your gas supplier.**
- **Use only your hand to turn the gas control ON/OFF knob on the gas valve. Never use tools. If the valve ON/OFF knob will not turn by hand, do not try to repair it. Call a qualified service technician. Force or attempted repair may result in a fire or explosion.**
- **Do not use this appliance if any part has been under water. Immediately call a qualified service technician to inspect the appliance and to replace any part of the control system and any gas control which has been under water.**

1. Set thermostat to lowest setting.
2. Turn OFF all electric power to appliance.
3. Appliance is equipped with ignition device that automatically lights burner—do not try to light burner by hand—open access door and locate gas valve.
4. See **Figure 26**. For unit sizes 150 and 200, locate gas control (ON/OFF) knob on gas valve and turn gas control knob clockwise to OFF. For unit sizes 275, 350, and 400, locate gas control (ON/OFF) knob on gas valve and turn knob clockwise so that line on knob aligns with position indicator. Depress knob and continue rotation to OFF position.

NOTE: SINGLE-STAGE VALVES ARE ILLUSTRATED. OPTIONAL TWO-STAGE VALVES ARE SIMILAR.

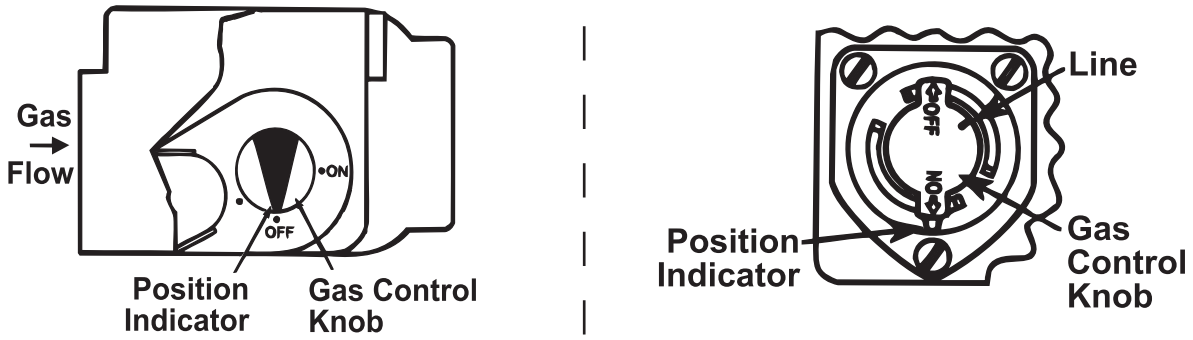

UNIT SIZES 150 AND 200 | **UNIT SIZES 275, 350, AND 400**

Figure 26. Typical Gas Control Knob

5. Wait 5 minutes to clear out any gas and then smell for gas, including near floor. If you smell gas, STOP! and follow above DANGER statement or WARNINGS or on operating label on heater. If you do not smell gas, proceed to next step.
6. See **Figure 26**. For unit sizes 150 and 200, turn gas control knob counterclockwise to ON. For unit sizes 275, 350, and 400, turn knob counterclockwise so that line on knob aligns with position indicator. Allow knob to pop up and continue rotation to ON position.
7. Close access door.
8. Turn ON electric power to heater.
9. Set thermostat to desired setting.

NOTE: If the appliance does not operate, follow the instructions in step 14 (and on the operating label on the heater). Call your service technician.

10. Thermostat calls for heat and energizes venter motor.
11. Venter pressure switch closes and allows unit to fire.
12. Burner flame is sensed and in 30 seconds, blower motor is energized.
13. If flame is extinguished during main burner operation, integrated control system closes main valve and must be reset by interrupting power to control circuit. Refer to lighting instructions on heater.
14. TO TURN OFF GAS TO THE APPLIANCE:
    a. Set thermostat to lowest setting
    b. If service is to be performed, turn OFF electric power to appliance.
    c. Open access door.
    d. Turn gas control knob to OFF (refer to step 4). Do not force control knob.
    e. Close access door.

Operating Sequences

Normal Heat Cycle Operating Sequence

- **Call for heat:** The heating system controller calls for heat. The ignition system circuit board checks to see that the limit switch is closed and the pressure switch is open. If the limit switch is open, the circuit board responds as defined in the **Abnormal Heat Cycle Functions**, ***Limit switch operation*** section. If the pressure switch is closed, the circuit board will do four flashes on the green LED and wait indefinitely for the pressure switch to open. If the pressure switch is open, the circuit board proceeds to pre-purge.
- **Pre-purge:** The circuit board energizes the venter motor and waits for the pressure switch to close. If the pressure switch does not close within 30 seconds of the venter motor energizing, the circuit board will do two flashes on the green LED. The circuit board will leave the venter motor energized indefinitely as long as the call for heat remains and the pressure switch is open. When the pressure switch is proven closed, the circuit board begins the pre-purge time. If flame is present any time while in prepurge, the prepurge time is restarted. If flame is present long enough to cause lockout, the circuit board responds as defined in the **Ignition System Fault Modes**, ***Undesired flame*** section. The ignition system circuit board runs the venter motor for a 20-second pre-purge time, then proceeds to the ignition trial period.
- **Ignition trial period:** The ignition system circuit board energizes the spark and main gas valve. The venter remains energized. If flame is sensed during the first 16 seconds, the spark is de-energized. If flame has not been sensed during the first 16 seconds, the control de-energizes the spark output and keeps the gas valve energized for an additional one second flame proving period. If flame is not present after the flame proving period, the control de-energizes the gas valve and proceeds with ignition re-tries as specified in the **Abnormal Heat Cycle Functions**, ***Ignition retry*** section. If flame is present, the circuit board proceeds to steady heat.
- **Steady heat:** Circuit board inputs are continuously monitored to ensure limit and pressure switches are closed, flame is established (sensor on both burner sections), and the system controller call for heat remains. When the call for heat is removed, the ignition system circuit board de-energizes the gas valve and begins post-purge timing.
- **Post-purge:** The venter motor output remains on for a 45-second post-purge period after the system controller is satisfied.

Abnormal Heat Cycle Functions

- **Interrupted call for heat:** If the system controller call for heat is removed before the flame is recognized, the circuit board will run the venter motor for the post purge period and de-energize all outputs. If the call for heat is removed after successful ignition, the circuit board will de-energize the gas valve and run the venter motor through post purge.
- **Ignition retry:** If flame is not established on the first trial for ignition period, the ignition system circuit board de-energizes the gas valve, and the venter motor remains energized for an inter-purge period of 10 seconds. The spark and gas valve are then re-energized, and the circuit board initiates another trial for ignition. If flame is not established on the second trial for ignition, the circuit board de-energizes the gas valve and venter motor remains energized. The spark and gas valve are re-energized and the circuit board initiates another trial for ignition. If flame is not established on the third trial for ignition period, the circuit board de-energizes the gas valve, and the venter motor remains energized for an inter-purge period of 10 seconds. The circuit board then re-energizes the gas valve and spark and initiates another trial for ignition. If flame is not established on the fourth trial for ignition (initial try plus three re-tries), the circuit board de-energizes the gas valve and goes into lockout. The circuit board goes to one flash on the green LED to indicate ignition failure lockout.
- **Limit switch operation:** The limit switch is ignored unless a call for heat is present (W energized). If the limit switch is open and a call for heat is present, the control de-energizes the gas valve, runs the blower motor on heat speed, and runs the induced draft (venter) motor. The control will be in soft lockout and flashing fault code “3”, before returning to normal operation. When the limit switch re-closes or the call for heat is lost, the control runs the induced draft motor through post purge and runs the blower through the selected fan off delay.

- **Pressure switch:** If the pressure switch opens before the trial for ignition period, the venter motor will run through the pressure switch recognition delay (2 seconds), the gas valve will be de-energized, and the venter motor will run through the postpurge time. The ignition system circuit board will re-start the heat cycle at the pressure switch proving state if the call for heat still exists. Pressure switch opening for less than 2 seconds during the trial for ignition period shall not interrupt the heat cycle (gas valve will de-energize while the pressure switch is open). If the pressure switch opens after a successful ignition, the circuit board will de-energize the gas valve. If flame is lost before the end of the 2-second pressure switch recognition delay, the circuit board will respond to the loss of flame. If the pressure switch remains open for 2 seconds and the flame remains, the circuit board de-energizes the gas valve and the venter motor runs through postpurge. Power interruptions of less than 80 mS shall not cause the circuit board to change operating states. Power interruptions greater than 80 mS may cause the circuit board to interrupt the current operating cycle and restart.

Ignition System Operating Sequence

NOTE: This is a three trial system. The unit will lockout for one hour before initiating another trial for ignition. If the unit fails after one recycle interval, the unit will go into hard lockout and must be reset by interrupting power or resetting the thermostat. To initiate another trial for ignition before the one hour interval, either reset the thermostat or interrupt power to the unit for 30 seconds.

- **Call for heat from thermostat:** On a call for heat from the thermostat, the system energizes the venter motor and goes through a 10-second prepurge. The system verifies that the pressure switch has changed states closing the normally-open contactor and that the high limit is in the closed state.
- **Gas valve is energized:** The gas valve is then energized, and the ignition system provides the high-voltage spark to the electrode to ignite the main burner gas.
- **Carryover of all burners:** Burner flame is electronically sensed by the control (minimum 1.0 microamps) upon carryover of all burners. A separate solid metal probe is used as the flame sensing function. A low-voltage electrical signal is imposed on the metal probe which is electrically isolated from ground.
- **Flame impinges on flame-sensing probe:** When the flame impinges on the flame sensing probe, the flame acts as a conduction path to ground. The flame rectifies and completes the DC circuit, and the ignition system acknowledges the flame. The blower motor is energized by the system after 30 seconds of flame sensing.
- **Thermostat is satisfied:** After the thermostat has been satisfied, the system de-energizes the gas valve, the venter motor goes through a 45-second post-purge, and the blower motor remains energized for an additional 135 seconds.

Ignition System Fault Modes

- **Undesired flame:** If flame is sensed longer than 20 seconds while the gas valve is de-energized, the circuit board shall energize the venter motor. When flame is no longer sensed, the venter motor will run through postpurge. The circuit board will do a soft lockout, but will still respond to open limit and flame. The FLAME (yellow) LED shall flash rapidly when lockout is due to undesired flame.
- **Gas valve relay fault:** If the circuit board senses the gas valve as energized for more than one second when the circuit board is not attempting to energize the gas valve, or the gas valve is sensed as not energized when it is supposed to be energized, then the circuit board will lockout with the green LED off. The control assumes either the contacts of the relay driving the gas valve have welded shut, or the sensing circuit has failed. The venter motor is forced off to open the pressure switch to stop gas flow unless flame is present. If the gas valve was sensed as closed when it should be open, and has not de-energized after the venter motor was shutoff for 15 seconds, then the venter motor is re-energized to vent the unburned gas.

Operating Sequences—Continued

Ignition System Fault Modes—Continued

- **Soft lockout:** The circuit board shall not initiate a call for heat while in lockout. The circuit board will still respond to an open limit and undesired flame. Lockout shall automatically reset after one hour. Lockout may be manually reset by removing power from the circuit board for more than one second or removing the call for heat for more than one and less than 20 seconds.
- **Hard lockout:** If the circuit board detects a fault on the board, the status LED will be de-energized, and the circuit board will lockout as long as the fault remains. A hard lockout will automatically reset if the hardware fault clears.
- **Power interruption:** During a momentary power interruption or at voltage levels below the minimum operating voltage (line voltage or low voltage) the ignition system will self-recover without lockout when voltage returns to the operating range. Power interruptions of less than 80 mS shall not cause the circuit board to change operating states. Power interruptions greater than 80 mS may cause the circuit board to interrupt the current operating cycle and restart.

Vent System Testing

For power-vent units (does not apply to separated-combustion installation option CC2 or CC6), test the vent system as follows:

1. Seal any unused openings in venting system.
2. Inspect venting system for proper size and horizontal pitch, as required in *National Fuel Gas Code* (ANSI Z223.1 or *Natural Gas and Propane Installation Code* (CSA B149.1) and *Installation Code for Gas Burning Appliances and Equipment* (B149.2) and in this manual.
3. Determine that there is no blockage or restriction, leakage, corrosion, or other deficiencies that could cause unsafe conditions.
4. In so far as practical, close all building doors and windows and all doors between heater space and other building spaces.
5. Turn on clothes dryers and exhaust fans, such as range hoods and bathroom exhausts, so they operate at maximum speed. Do not operate summer exhaust fan. Close fireplace dampers.
6. Light heater following lighting instructions, adjust thermostat for continued operation, and verify that combustion products are venting properly.
7. After determining that heater vents properly, return doors, windows, exhaust fans, and fireplace dampers to their previous conditions. If improper venting is observed, venting system must be corrected.

Post-Startup Checklist

- ❑ With unit in operation, measure manifold gas pressure. Manifold pressure for natural gas should be 3.5 IN WC and 10 IN WC for propane (refer to **Measure and Adjust Manifold (Outlet) Gas Pressure** section).
- ❑ Turn unit OFF and ON, pausing 2 minutes between each cycle. Observe for smooth ignition.
- ❑ Place owner's envelope that contains limited warranty, this manual, and any control or optional information in accessible location near heater. Follow instructions on envelope.
- ❑ IMPORTANT: After at least 8 hours but no longer than 1 week of operation, recheck blower wheel, all setscrews, blower pulley, motor pulley, and belt tension. Make any required adjustments.

⚠ DANGER ⚠

- **The gas burner in this gas-fired equipment is designed and equipped to provide safe, complete combustion. However, if the installation does not permit the burner to receive the proper supply of combustion air, complete combustion may not occur. The result is incomplete combustion which produces carbon monoxide, a poisonous gas that can cause death. Safe operation of indirect-fired gas burning equipment requires a properly operating vent system which vents all flue products to the outside atmosphere. FAILURE TO PROVIDE PROPER VENTING WILL RESULT IN A HEALTH HAZARD WHICH COULD CAUSE SERIOUS PERSONAL INJURY OR DEATH.**
- **If installed as a separated-combustion unit, install either the horizontal or vertical combustion air/vent system (refer to Venting/Combustion Air Requirements for Separated-Combustion Installations section) using the concentric adapter supplied. Always comply with the combustion air requirements in the installation codes and instructions. Combustion air at the burner should be regulated only by manufacturer-provided equipment. NEVER RESTRICT OR OTHERWISE ALTER THE SUPPLY OF COMBUSTION AIR TO ANY HEATER. CHECK THE VENT SYSTEM FOR SOUNDNESS AND FUNCTION; MAINTAIN IT IN PROPER OPERATING CONDITION.**

ADJUSTMENTS

Checking and Adjusting Belt Tension

- Proper belt tension is important to the long life of the belt and motor. A loose belt will cause wear and slippage. Too much tension will cause excessive motor and blower bearing wear. Check belt tension as shown in **Figure 27**.
- If the belt cannot be depressed 3/4 inches (19 mm), as shown in **Figure 27**, adjust the belt tension as follows:
  a. Ensure that belt is aligned in pulley grooves properly and is not angled from pulley to pulley.
  b. Loosen adjusting screw locknut on motor base and turn adjusting screw until belt can be depressed 3/4 inches (19 mm).
  c. When correct belt tension is achieved, retighten adjusting screw locknut.

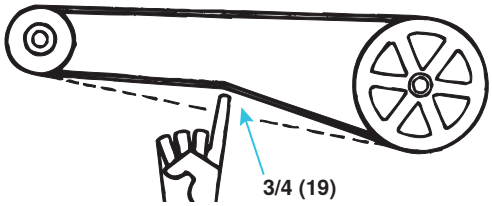

Figure 27. Checking Belt Tension

Adjusting Blower Speed

NOTE: Most blower motors are equipped with thermal overload protection of the automatic, reset type. If the motor is not equipped with thermal overload protection, the unit will be equipped with a starter. The adjustable setting on the starter will be factory-set and sealed to match the amp draw of the motor. No change should be made to the starter setting unless the original motor is replaced. Starters are equipped with a manual reset. If an overload condition is experienced, the condition must be corrected and the starter must be manually-reset.

- Blower speed may be adjusted to achieve the desired outlet temperature as long as the adjustment is within the temperature rise and the static pressure limits shown on the heater rating plate. Direct-drive motors are factory-set at medium speed for heating. Belt-drive motors are factory-set between maximum and minimum blower speeds. Belt drives may also be ordered with an optional variable frequency drive that changes motor speed by changing the electrical frequency to the motor.
- If the duct resistance is low, the blower may deliver too high an air volume. If the resistance is very low, the blower may deliver excess air to overload the motor, causing the overload protector to activate. Reducing the blower speed will correct these conditions. If ductwork is added to an installation, it may be necessary to increase the blower speed.
- After the installation is complete including all ductwork, the amp draw of the motor should be checked with an amp meter to verify that the motor amp rating on the motor nameplate is not being exceeded. Amps may be adjusted downward by reducing the blower speed or by increasing the duct system static pressure. The temperature rise must be within the range specified on the unit rating plate.
- **Direct-drive motors:** Direct drive motors have multi-speed taps for speed adjustment. If your installation requires an adjustment of the blower speed, the motor may be rewired to an alternate tap as follows:
  a. Turn OFF the gas and electric power.
  b. Remove the blower door panel.
  c. Refer to the wiring diagram on the heater to select the white and black wires for the desired adjustment. Units are wired at medium speed for heating.
  d. Cut the crimped cap for the end of the wire that you intend to use and strip the insulation.
  e. Disconnect the factory-wired connection and rewire using the newly stripped wire.
  f. Put a wire nut on the end of the blower motor wire that was disconnected.
  g. Replace the heater door panel. Turn ON the gas and electric. Check for proper operation.
- **Belt-drive motors:** Belt drives have an adjustable pulley which permits adjustment of the blower speed. Adjust the blower speed of a belt drive motor as follows:

NOTE: These instructions apply only to a belt-drive motor not equipped with an optional variable frequency drive. For a belt-drive with an optional variable frequency drive, follow the variable frequency controller manufacturer's instructions that are packaged with the heater (in the owner's envelope) to program the variable frequency drive settings.

a. Turn OFF the gas and the electric power.
b. Loosen belt tension and remove the belt.
c. Loosen the setscrew on the side of the pulley away from the motor.
d. To increase the blower speed, turn the adjustable half of the pulley inward. To decrease the blower speed, turn the adjustable half of the pulley outward. One turn of the pulley will change the speed 8–10%.

e. Tighten the set screw on the flat portion of the pulley shaft.

f. Replace the belt and adjust the belt tension. Adjust tension by turning the adjusting screw on the motor base until the belt can be depressed 3/4 inch (see **Figure 27**). Re-tighten the lock nut on the adjusting screw. Ensure that the belts are aligned in the pulley grooves properly and are not angled from pulley to pulley.

g. Turn ON the gas and electric. Light the heater following the instructions on the lighting instruction plate.

h. Check the motor amps with an amp meter. The maximum motor amp rating on the motor nameplate must not be exceeded.

i. When service is complete, check for proper operation.

Motor Amp Adjustment

⚠ CAUTION ⚠

An external duct system static pressure not within the limits shown on the rating plate, or improper motor pulley or belt adjustment, may overload the motor or cause the limit control to activate.

- Use an amp meter to check motor amps. **Table 22** lists Full Load Amps (FLA) for all horsepowers and voltages. Amps may be adjusted downward by reducing blower RPM or increasing duct system static pressure.
- The amps listed in **Table 22** can be used for sizing line wiring but should not be interpreted as the exact motor amps. Refer to the motor rating plate for exact motor specifications. At final adjustment, amperes should not exceed motor nameplate amp rating. The installation must be adjusted to obtain a temperature rise within the range specified on the heater rating plate.

Table 22. FLA of Blower Motors

Voltage/Phase	HP							
	1/3	1/2	3/4	1	1-1/2	2	3	5
	FLA							
Open-Type Belt-Drive Motors								
208V/1PH	3.20	4.10	5.20	6.20	7.80	12.30	13.70	—
240V/1PH	3.20	4.10	5.20	6.30	7.50	12.30	12.40	
208V/3PH	1.70	1.80	2.90	3.20	4.40	6.00	9.00	13.40
240V/3PH	1.40	1.70	2.60	3.00	4.30	6.00	8.60	13.20
480V/3PH	0.70	0.90	1.30	1.50	2.20	3.00	4.30	6.60
575V/3PH	—	0.70	1.00	1.40	2.00	2.40	3.60	5.40
TEFC-Type Belt-Drive Motors								
208V/1PH	2.30	3.50	5.40	6.20	7.80	—		
240V/1PH	2.40	3.60	5.50	6.00	7.50			
208V/3PH	1.20	2.10	2.40	3.25	4.47			
240V/3PH	1.20	1.80	2.30	2.94	4.05			
480V/3PH	0.60	0.90	1.20	1.47	2.02			
575V/3PH	—	0.70	0.80	1.30	1.70			
Direct-Drive Motors								
208/230V/1PH	—			6.30	—			

Ductstat Adjustment (Two-Stage, Makeup Air, Option AG3)

The ductstat with attached capillary tube senses the discharge air temperature and operates the two stage valve to maintain the temperature within a fixed differential of 2-1/2°F (1.4°C). Adjustable factory setting is 70°F (21°C). Due to different CFM settings and outside air temperatures, the average downstream outlet temperature may not match the ductstat setting exactly. After the installation is complete, adjust the setpoint of the ductstat to achieve the desired average outlet air temperature.

Measure and Adjust Manifold (Outlet) Gas Pressure

NOTE: Always check the rating plate for minimum gas supply pressure.

Measuring manifold gas pressure cannot be done until the heater is in operation. Requirements vary based on size of burner and the gas control option.

- **For natural gas:** When the heater leaves the factory, the combination gas valve is set so that the outlet gas pressure of a single-stage valve or high fire of a two-stage valve is regulated to 3.5 IN WC. Low fire on a two-stage valve is set to 0.9 IN WC. Inlet supply pressure to the valve must be a minimum of 5 IN WC or as noted on the rating plate and a maximum of 14 IN WC.
- **For propane gas:** When the heater leaves the factory, the combination gas valve is set so that the outlet gas pressure of a single-stage valve or high fire of a two-stage valve is regulated to 10 IN WC. Low fire on a two-stage valve is set to 3.8 IN WC. Inlet pressure to the valve must be a minimum of 11 IN WC and a maximum of 14 IN WC.

⚠ WARNING ⚠

- **Manifold gas pressure must never exceed 3.5 IN WC for natural gas or 10 IN WC for propane gas.**
- **Before attempting to measure or adjust manifold gas pressure, the inlet (supply) pressure must be within the specified range for the gas being used, both when the heater is in operation and when it is on standby. Incorrect inlet pressure could cause excessive manifold gas pressure immediately or at some future time. If natural gas supply pressure is too low, contact your gas supplier.**

NOTE: A manometer (fluid-filled gauge) with an inches water column scale is recommended.

1. With manual valve (on combination valve) positioned to prevent flow to main burners, connect manometer to outlet pressure tap (see **Figure 28**) on valve.

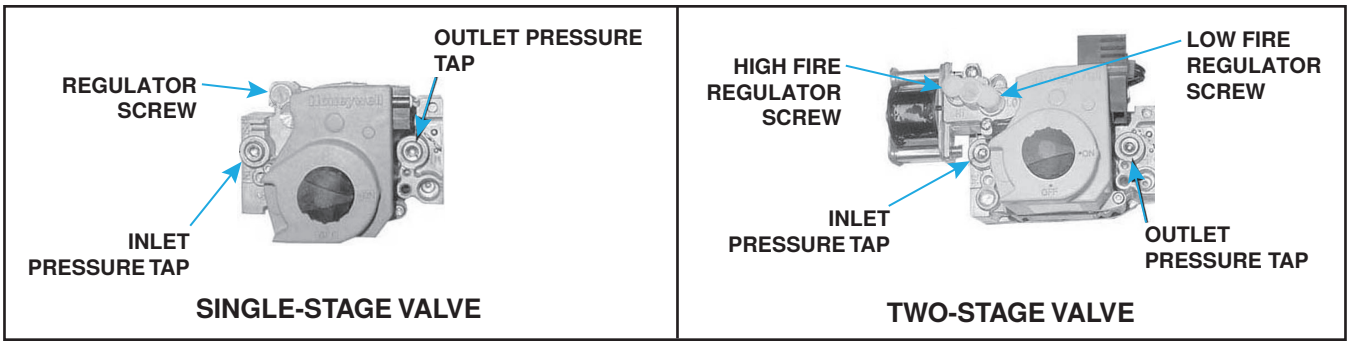

Figure 28. Combination Gas Valves

2. To measure low stage pressure on units equipped with two-stage valve, disconnect wire from HI terminal on valve. Open valve and operate heater and observe manometer reading. Be sure to reconnect wire.

⚠ CAUTION ⚠

DO NOT bottom out the gas valve regulator screw. This can result in excessive overfire and heat exchanger failure due to unregulated manifold pressure.

3. Normally, adjustments to factory-preset regulator should not be necessary. If adjustment is necessary, set pressure to correct settings by turning regulator screw (see **Figure 28**) IN (clockwise) to increase pressure or OUT (counterclockwise) to decrease pressure. Consult valve manufacturer's literature provided with furnace for more detailed information.
4. When manometer reading indicates that outlet pressure is correct, disconnect manometer and install cap(s) on regulator screw(s).

High-Elevation Conversion

NOTES:

- **High-elevation (>2,000 feet (>609 meters)) application with this unit depends on the installation elevation and the heating value of the gas. At high elevations, the heating value of natural gas is always lower than the heating value at sea level.**
- **Deration is necessary to compensate for low atmospheric pressure at high elevations. Generally this will require obtaining the gas heating value from the local gas utility and replacing the burner orifices.**

For high-elevation (>2,000 feet (609 meters)) installations that require orifice replacement, replace the burner orifices as follows:

1. Determine model number and rated input (BTUh) from unit's rating plate.
2. Determine appropriate orifice replacement (refer to **Table 20**) for installation elevation.
3. Unthread existing gas orifices from gas manifold.

⚠ DANGER ⚠

- **Do not use Teflon tape or pipe joint compound on the orifice threads. The hole in the orifice may become blocked and may cause fire, explosion, property damage, carbon monoxide poisoning, personal injury, or death.**
- **Use only using factory-supplied orifices. Do not attempt to drill out orifices in the field. Improperly drilled orifices may cause fire, explosion, carbon monoxide poisoning, personal injury, or death.**

4. Thread replacement gas orifices into gas manifold. To prevent cross-threading, hand-tighten orifices into gas manifold until snug and then tighten one-half to one turn using wrench.

⚠ DANGER ⚠

DO NOT use an open flame to check for gas leaks.

5. Check all connections for gas leaks using commercial leak-detecting fluid or rich soap and water solution. Leaks are indicated by presence of bubbles. If leak is detected, tighten connection. If leak cannot be stopped by tightening connection, replace part(s).

ADJUSTMENTS—CONTINUED

Measure and Adjust Manifold (Outlet) Gas Pressure—Continued

Table 23. Burner Orifices

Installation Location	Installation Elevation (Feet (Meters))	Gas Type	Unit Size (MBTUh)						
			150	200	250	275	300	350	400
			PN, Drill Size (Quantity)						
US, Canada	0–2000 (0 –610)	NG	164866, 2.10 mm (8)	11833, #44 (10)	11833, #44 (13)	16590, #46 (15)	11833, #44 (15)	11835, #37 (12)	45870, #38 (14)
		LP	97359, 1.25 mm (8)	11830, #55 (10)	97359, 1.25 mm (13)	11830, #55 (15)		9789, #53 (12)	61653, 1.55 mm (14)
US	2001–3000 (611–915)	NG	84853, #47 (8)	38678, #45 (10)	38678, #45 (13)	16590, #46 (15)	38678, #45 (15)	45870, #38 (12)	45871, #39 (14)
		LP	97359, 1.25 mm (8)	11830, #55 (10)	97359, 1.25 mm (13)	11830, #55 (15)		11834, #54 (12)	9789, #53 (14)
Canada	2001–4500 (611–1373)	NG	40414, #48 (8)	38678, #45 (10)	38678, #45 (13)	38678, #45 (15)		45871, #39 (12)	11792, #41 (14)
		LP	63003, 1.20 mm (8)	11830, #55 (10)	63003, 1.20 mm (13)	11830, #55 (15)		11834, #54 (12)	61652, 1.45 mm (14)
US	3001–4000 (916–1220)	NG	84853, #47 (8)	38678, #45 (10)	38678, #45 (13)	84853, #47 (15)	38678, #45 (15)	45871, #39 (12)	87391, #40 (14)
		LP	63003, 1.20 mm (8)	11830, #55 (10)	63003, 1.20 mm (13)	11830, #55 (15)		11834, #54 (12)	9789, #53 (14)
	4001–5000 (1221–1525)	NG	40414, #48 (8)	38678, #45 (10)	38678, #45 (13)	84853, #47 (15)	38678, #45 (15)	45871, #39 (12)	11792, #41 (14)
		LP	63003, 1.20 mm (8)	11830, #55 (10)	63003, 1.20 mm (13)	11830, #55 15)		11834, #54 (12)	61652, 1.45 mm (14)
US	5001–6000 (1526–1830)	NG	40414, #48 (8)	16590, #46 (10)	16590, #46 (13)	40414, #48 (15)	16590, #46 (15)	87391, #40 (12)	11792, #41 (14)
		LP	63003, 1.20 mm (8)	39658, #56 (10)	63003, 1.20 mm (13)	39658, #56 (15)		11834, #54 (12)	61652, 1.45 mm (14)
	6001–7000 (1831–2135)	NG	40414, #48 (8)	84583, #47 (10)	84583, #47 (13)	39651, #49 (15)	84583, #47 (15)	11792, #41 (12)	84437, #42 (14)
		LP	39658, #56 (8)	39658, #56 (10)	39658, #56 (13)	39658, #56 (15)		11834, #54 (12)	61652, 1.45 mm (14)
	7001–8000 (2136–2440)	NG	39651, #49 (8)	84583, #47 (10)	84583, #47 (13)	39652, #50 (15)	84583, #47 (15)	84437, #42 (12)	84437, #42 (14)
		LP	63922, 1.15 mm (8)	39658, #56 (10)	63922, 1.15 mm (13)	39658, #56 (15)		11834, #54 (12)	11834, #54 (14)
	8001–9000 (2441–2745)	NG	39651, #49 (8)	40414, #48 (10)	40414, #48 (13)	39652, #50 (15)	40414, #48 (15)	84437, #42 (12)	11828, #43 (14)
		LP	63922, 1.15 mm (8)	39658, #56 (10)	63922, 1.15 mm (13)	39658, #56 (15)		11830, #55 (12)	11834, #54 (14)

NOTE: Unit sizes 250 and 300 have been discontinued.

Gas Conversion

⚠ DANGER ⚠

Gas conversion must be performed by qualified service personnel using a factory-supplied conversion kit. Failure to use the proper conversion kit can cause fire, explosion, property damage, carbon monoxide poisoning, personal injury, or death.

If gas conversion (natural gas to propane or propane to natural gas) is required, convert the unit in accordance with the gas conversion manual found at **www.reznorhvac.com**. When conversion is complete, verify that the input rate is correct.

MAINTENANCE

⚠ WARNING ⚠

If you turn OFF the power supply, turn OFF the gas.

NOTE: Use only factory-authorized replacement parts.

This unit will operate with a minimum of maintenance. To ensure long life and satisfactory performance, a heater that is operated under normal conditions should be inspected and cleaned at the start of each heating season. If the heater is operating in an area where an unusual amount of dust, soot, or other impurities are present in the air, more frequent maintenance is recommended.

Service Checklist

The following section is designed to aid a qualified service person in maintaining and servicing this equipment. At a minimum, perform the following annually:

- ❑ Check gas valve to ensure that gas flow is being shut off completely.
- ❑ Clean heat exchanger both internally and externally.
- ❑ Check burners for scale, dust, or lint accumulation and clean as needed.
- ❑ Check vent/combustion air system, inspect all joints, and replace any parts that do not appear sound.
- ❑ Clean blower and motor and, if equipped with belt drive, check belt.
- ❑ Check filters.
- ❑ Check ignitor.
- ❑ Clean venter.
- ❑ Check drain lines and clean as necessary.
- ❑ Check wiring for any damaged wire—replace damaged wiring (refer to **Electrical Connections** section for wiring requirements).

Maintenance Procedures

Vent/Combustion Air System Maintenance

Check vent/combustion air system at least once a year. Inspect all joints, seams, and terminal caps. Clean grills and screens. Replace any defective parts.

Maintenance Procedures—Continued

Combination Gas Valve Maintenance

⚠ WARNING ⚠

The combination gas valve is the prime safety shutoff. To ensure positive closure, all gas supply lines must be free of dirt or scale before connecting them to the unit.

Inspect the combination gas valve, carefully remove any external dirt accumulation, and check wiring connections. Check the valve annually to ensure that the valve is shutting off gas flow completely as follows:

1. Close manual shutoff valve to prevent flow to combination gas valve.

NOTE: A manometer (fluid-filled gauge) with an inches water column scale is recommended.

2. Connect manometer to inlet pressure tap on combination gas valve(see **Figure 28**).
3. Observe manometer for 2 to 3 minutes—no gas pressure should be indicated.
   a. If manometer indicates any gas pressure, manual shutoff valve must be replaced or repaired before combination gas valve can be checked.
   b. If manometer does not indicate gas pressure, slowly open manual shutoff valve.
4. Close manual shutoff valve and observe manometer— no loss of gas pressure should be indicated. If loss of pressure is indicated, replace combination gas valve before furnace is restored to operation.

Burner Rack and Manifold Maintenance

⚠ DANGER ⚠

Excessive dirt buildup on and inside the ports on a burner could cause fuel gas to spill out of the back of the burner tube. Fuel gas spilling out of the back of a burner tube will cause gas odor inside the building, and if not corrected, could eventually cause a fire/explosion hazard. To prevent fuel gas spilling from the back of a burner tube, check the burner ports at least annually and clean if necessary.

⚠ WARNING ⚠

To prevent injury, wearing eye protection is recommended.

1. Shut OFF gas supply upstream of combination gas valve.
2. Turn OFF electric supply.
3. Remove burner compartment door.
4. Disconnect union and remove gas pipe from inlet of gas valve.
5. Disconnect wiring:
   a. Mark and disconnect electrical wires to gas valve.
   b. Disconnect flame sensor wire, flame rollout switch wires, and ignitor wire at burner box cover.
   c. Mark and disconnect ignitor ground wire at terminal board.
6. Disconnect silicone tubing from static tap on burner box cover.

7. Remove burner rack and manifold:
   a. Remove all burner cover sections. Depending on when unit was manufactured, there will be either two or three sections. If two, right and left sections extend over front. If three, there will be right, left, and separate front section.
   b. Remove screws (see **Figure 29**) that secure manifold to burner rack. Slide manifold from burner rack.
   c. Remove screws (see **Figure 29**) that secure ends of burner rack to cabinet. Carefully pull burner rack away from heater.

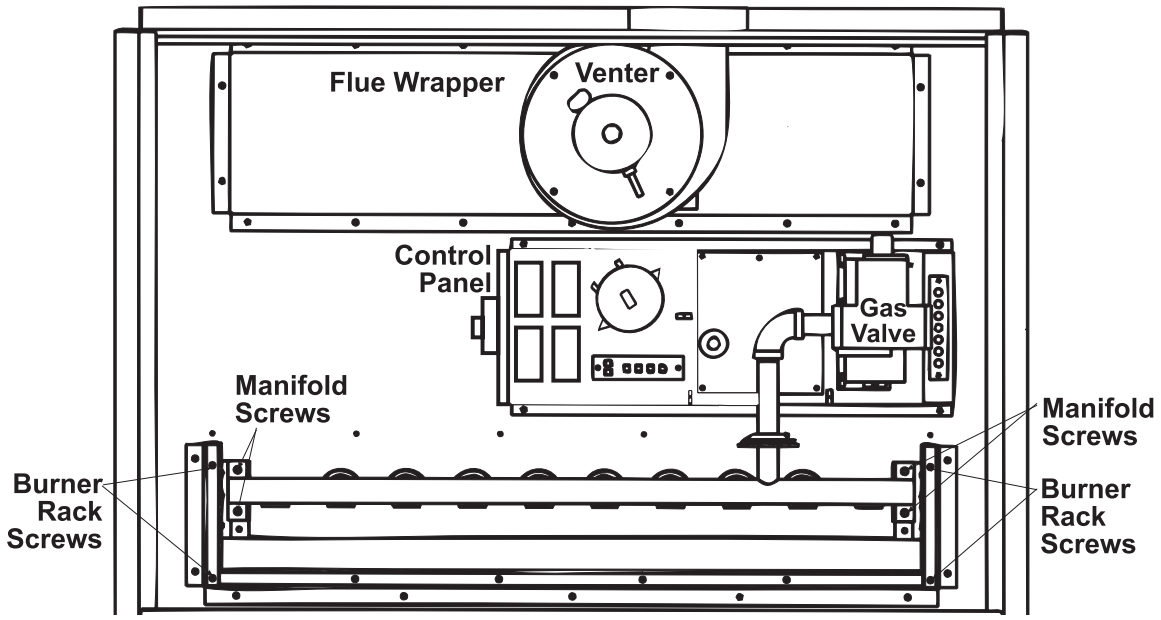

Figure 29. Burner Rack Removal

8. Clean burner rack and manifold:

NOTE: Requires a wire brush, cleaning cloth, an automotive type aerosol degreaser or refrigerant coil cleaner, and compressed air. Cleaning the burners with an aerosol degreaser is highly recommended as the degreaser will retard future buildup of dirt.

   a. Remove any soot deposits from burners using wire brush. Clean ports with aerosol degreaser and/or compressed air. Wipe inside of burner tubes clean.
   b. Inspect cleaned burner rack for any damage or deterioration. If burner has any damage or signs of deterioration, replace it.
   c. Clean burner orifices with air pressure. Do not ream orifices.
9. Re-assemble heater and test for proper operation.

Combustion Air Proving Switch Maintenance

⚠ DANGER ⚠

Safe operation requires proper venting flow. Never bypass the combustion air proving switch or attempt to operate the unit without the venter running and proper flow in the vent system. Hazardous conditions could result.

Check the tubing that connects the pressure switch and the venter. If the tubing is blocked or deteriorated, clean or replace. Ensure that the connections are tight. If it is determined that the pressure switch needs replacing, use only the factory-authorized replacement part that is designed for this heater.

Maintenance Procedures—Continued

Ignition System Maintenance

⚠ CAUTION ⚠

Due to high voltage on the spark wire and electrode, do not touch when energized.

NOTE: Proper operation of the direct spark ignition system requires a minimum flame signal of 1.0 microamps as measured by a microampmeter.

1. Access ignition system in accordance with steps 1–3 in **Burner Rack and Manifold Maintenance** section.
2. Service ignitor:
   a. On right side of burner rack, locate ignitor.
   b. Disconnect wire and remove screw and ignitor.
   c. Clean ignitor assembly using emery cloth.
   d. Spark gap (see **Figure 30**) must be maintained to 1/8 inch.

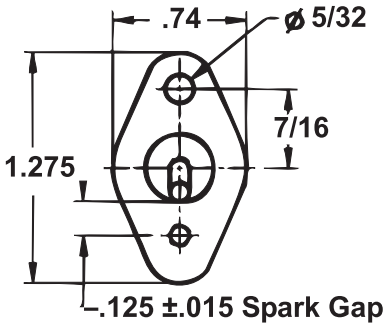

Figure 30. Front View of Ignitor Showing Spark Gap Measurement

NOTE: IMPORTANT: When re-assembling, the brown ground wire must remain attached to the ignitor.

3. Service flame sensor:
   a. On left side of burner rack, locate flame sensor.
   b. Disconnect wire and remove screw and flame sensor.
   c. Clean flame sensor using emery cloth.
4. Service ignition control module: integrated ignition control module monitors operation of heater including ignition. Do not attempt to disassemble ignition control module. However, each heating season lead wires should be checked for insulation deterioration and good connections.

Cleaning Heat Exchanger

⚠ CAUTION ⚠

Eye protection is recommended.

1. To clean outer surfaces (circulating air side) of heat exchanger, gain access by removing inspection panels in ductwork or removing ductwork. Use brush and/or air hose to remove accumulated dust and grease deposits.

2. Inner surfaces of heat exchanger can be reached for cleaning with burner, turbulators and venter assembly removed. Remove burner rack assembly in accordance with **Burner Rack and Manifold Maintenance** section.
3. Remove turbulators (metal strips inside heat exchanger tubes). Clean inside of tubes using long furnace brush or heavy wire to which steel wool has been attached. Brush inside each heat exchanger tube until all foreign material is removed. A flashlight is helpful in examining inside of tubes.
4. Clean turbulator strips, slide into end of tubes, and re-attach using existing screws.

NOTE: If operating with natural gas, there should be no soot deposits. For operation with propane gas, if sooting exists, check for improper gas manifold pressure and for obstructions in the vent. If the unit is installed as a power vent (drawing combustion air from inside the building) and dirt is found in the tubes indicating a dirty environment, installation of a separated combustion/venting system should be considered.

5. Re-assemble heater and check for proper operation.

Venter Motor and Wheel Maintenance

Remove dirt and grease from the motor housing. The venter motor is permanently lubricated; do not lubricate. Carefully clean the venter wheel assembly, being cautious not to bend the wheel. If it is determined that the venter motor or wheel needs replacing, use only the factory-authorized replacement part that is designed for use on this heater. Follow these instructions for replacement of the venter motor. Keep all removed hardware to be used in re-assembling and installing the replacement parts.

1. If heater is installed, turn OFF gas and electric power.
2. Remove control door panel.
3. Disconnect three venter motor wires at terminal block connections.
4. While holding motor, remove three or four screws that secure venter motor mounting plate to venter housing. Remove motor and wheel assembly from heater.
5. Disassemble motor and wheel assembly (see **Figure 31**, DETAIL A):

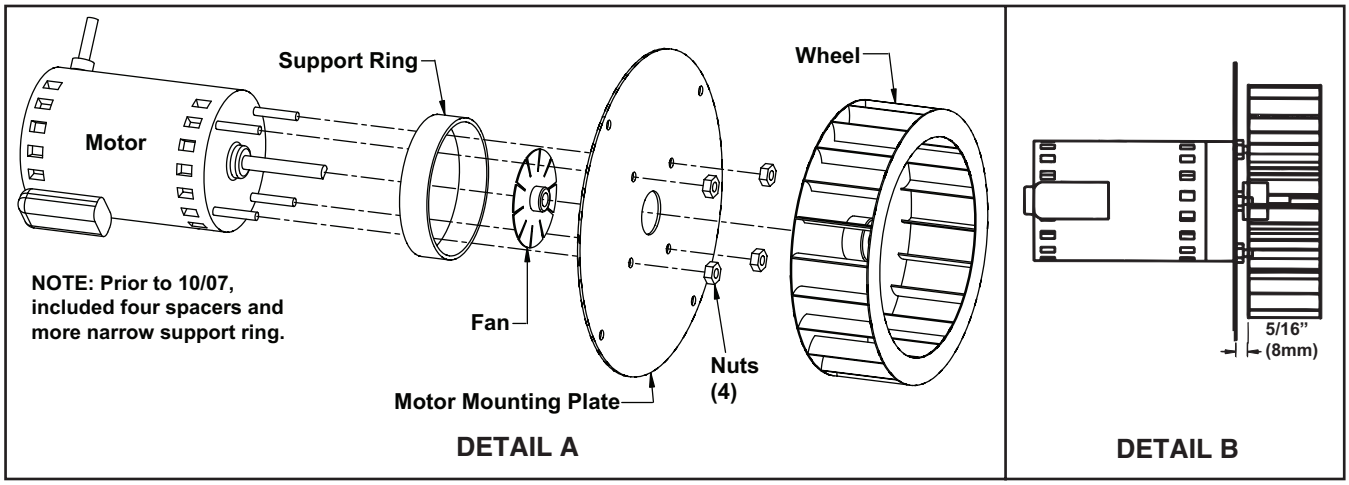

Figure 31. Venter Motor and Wheel Assembly

a. Using hex allen wrench, loosen venter wheel setscrew and slide venter wheel off shaft.
b. Remove four nuts that secure motor mounting plate and remove mounting plate.
c. Each bolt has cylindrical spacer. Remove four spacers and remove support ring.
d. Loosen setscrew and remove small fan blade.

Maintenance Procedures—Continued

Venter Motor and Wheel Maintenance—Continued

6. Re-assemble with replacement venter motor:
   a. Check motor mounting plate gasket and replace if deteriorated or torn.
   b. With blade side closest to motor (hub away from motor), slide small fan blade onto shaft. Position blade so that it does not hit motor and tighten setscrew to flat side of motor shaft.
   c. Install spacer over each bolt and slide motor support ring over all bolts. Position mounting plate with gasket side away from motor and secure plate using nuts (hand-tighten using nut driver—do not use power tool).
   d. Rotate fan to check for clearance. If required, loosen setscrew and adjust position of fan blade.
   e. Slide venter wheel over end of shaft with closed side toward motor. Position wheel with spacing shown in **Figure 31**, DETAIL B and tighten setscrew to flat side of motor shaft.
   f. Check for proper balance. If wheel is damaged or does not turn properly, replace it.
7. Install assembled venter motor and wheel. Follow wiring diagram to connect venter wires.
8. Close access panel.

Limit Control Maintenance

If it is determined that the limit control needs replacing, use only the factory-authorized replacement part that is designed for the size of heater. The limit control is accessible in the control compartment. The capillary sensor can be reached only by removing the ductwork.

Blower and Blower Motor Maintenance

Remove dirt and grease from the motor and the blower. Use care when cleaning to prevent causing misalignment or imbalance. If the unit is equipped with a belt drive, check the belt for signs of wear. Replace if needed. If belt adjustment is required, refer to the **Checking and Adjusting Belt Tension** section. If blower speed adjustment is required, refer to the **Adjusting Blower Speed** section.

Filter Maintenance

NOTE: Applies to a heater with either an optional return air filter cabinet or an outside air/return air mixing box with filters.

Check the filters quarterly. Clean or replace as needed. Refer to the replacement parts manual found at **www.reznorhvac.com** for replacement filters.

Condensate Drain Maintenance

If the installation has a flue wrapper condensate drain, clean or replace parts as needed and fill the drain trap.

Inlet Air Damper Maintenance

Clean dampers and controls of dust or dirt. There is no service required on the damper motor other than external cleaning. If the motor requires replacement, replace with an identical damper motor or damper motor replacement kit.

⚠ CAUTION ⚠

IMPORTANT: Do not short the hot side of the transformer to ground when servicing the heater. Doing so will cause the transformer to fail.

- Use a voltmeter to verify that there is 24V output from the transformer. If the transformer is not functioning, it must be replaced.
- If it is determined that an electrical component needs replacing, use only the factory-authorized replacement part that is designed for the unit.

TROUBLESHOOTING

General Troubleshooting

Table 24. General Troubleshooting

Symptom	Probable Cause	Remedy
A. Venter motor will not start	1. No power to unit	Turn ON power and check supply fuses or circuit breaker
	2. No 24V power to venter relay	Turn up thermostat and check control transformer output
		Ensure that all wire connections are solid
	3. Defective ignition control module	If 24V is available to ignition control module, replace module
	4. Defective venter motor	Replace venter motor
B. Burners will not light	1. Manual valve not open	Open manual valve
	2. Air in gas line	Bleed gas line
	3. Door switch open	Close blower compartment door; if door is closed, replace switch
	4. Gas pressure too high or too low	Adjust gas pressure (refer to **Measure and Adjust Manifold (Outlet) Gas Pressure** section)
	5. No spark	
	a. Loose wire connections	Ensure that all wire connections are solid
	b. Transformer failure	Ensure that 24V power is available
	c. Incorrect spark gap	Maintain spark gap at 1/8 inch
	d. Spark cable shorted to ground	Replace worn or grounded spark cable
	e. Spark electrode shorted to ground	Replace ceramic spark electrode if it is cracked or grounded
	f. Burners not grounded	Ensure that ignition control module is grounded to ignitor
	g. Ignition control module not grounded	Ensure that ignition control is grounded to furnace chassis
	h. Defective ignition control module	If 24V is available to ignition control module, replace module
	6. Lockout device interrupting control circuit due to above causes	Reset lockout by interrupting control at thermostat or main power
	7. Defective combustion air proving switch	Replace combustion air proving switch
	8. Main valve not operating	
	a. Defective main valve	If 24V is available to valve connections and valve remains closed, replace valve
	b. Loose wire connections	Ensure that all wire connections are solid
	9. Ignition control module does not power valve	
	a. Loose wire connections	Ensure that all wire connections are solid
	b. Flame sensor grounded	Ensure that flame sensor lead is not grounded or that insulation/ceramic is not cracked; replace as required
	c. Incorrect gas pressure	Adjust gas pressure (refer to **Measure and Adjust Manifold (Outlet) Gas Pressure** section)
	d. Cracked ceramic at sensor	Replace sensor
	10. Flame rollout switch open	
	a. Air blockage through unit	Check for heat exchanger or vent pipe blockage
	b. Defective flame rollout switch	Replace flame rollout switch

General Troubleshooting—Continued

Table 24. General Troubleshooting—Continued

Symptom	Probable Cause	Remedy
C. Burners cycle ON and OFF	1. Gas pressure too high or too low	Adjust gas pressure (refer to **Measure and Adjust Manifold (Outlet) Gas Pressure** section)
	2. Burners not grounded	Ensure that ignition control module is grounded to ignitor
	3. Ignition control module not grounded	Ensure that ignition control is grounded to furnace chassis
	4. Defective ignition control module	If 24V is available to ignition control module, replace module
	5. Defective combustion air proving switch	Replace combustion air proving switch
	6. Flame sensor grounded	Ensure that flame sensor lead is not grounded or that insulation/ceramic is not cracked; replace as required
	7. Cracked ceramic at sensor	Replace sensor
	8. Incorrect polarity	Reverse 115V line connections at ignition control module
D. No heat (heater operating)	1. Incorrect manifold pressure or orifices	Adjust gas pressure (refer to **Measure and Adjust Manifold (Outlet) Gas Pressure** section)
	2. Limit control cycling ON	Check airflow
	3. Improper thermostat location or adjustment	Refer to thermostat manufacturer's instructions
E. Cold air delivered	1. Incorrect manifold pressure	Adjust gas pressure (refer to **Measure and Adjust Manifold (Outlet) Gas Pressure** section)
F. Blower motor will not run	1. Circuit open	Ensure that all wire connections are solid
	2. Defective ignition control module	If 24V is available to ignition control module, replace module
	3. Defective blower motor	Replace blower motor
G. Blower motor turns ON and OFF while burner is operating	1. Motor overload device cycling ON and OFF	Check motor load against motor rating plate
		Replace blower motor as necessary
	2. Three-phase motor rotating in opposite direction	Interchange two legs of supply connection
H. Blower motor cuts out on overload	1. Low or high supply voltage	Correct electric supply
	2. Defective blower motor	Replace blower motor
	3. Static pressure incompatibility	Adjust blower speed or ductwork
	4. Defective bearing	Replace blower motor

Unit Troubleshooting Using Ignition Control Module

NOTE: IMPORTANT: When using a multimeter to troubleshoot the 24V circuit, place the meter's test leads into the 5- or 9-pin connector located on the ignition control. Do not remove connectors or terminals from the electrical components. Doing so can result in misinterpreted readings due to the ignition control module's fault mode monitoring circuits.

Do not attempt to repair the ignition control module. The only field-replaceable component is the 3A type ATC or ATO fuse. The direct spark integrated circuit board is polarity sensitive. If burners cycle ON and OFF, try switching the power supply leads. The supply connection made to L1 on the circuit board must be the hot wire. The LEDs on the ignition control module (see **Figure 32**) may be used to troubleshoot the unit (refer to **Table 25**). See **Figure 33** for a flowchart for troubleshooting the unit using the ignition control module.

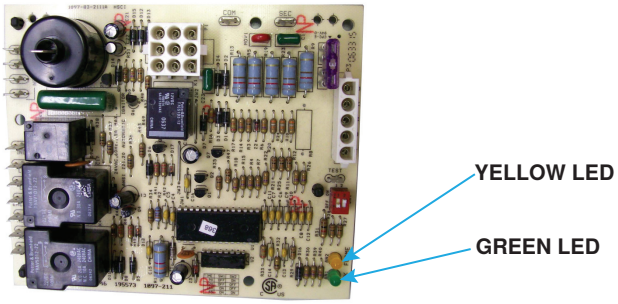

Figure 32. Ignition Control Module

Table 25. Unit Troubleshooting Using Ignition Control Module

LED	LED Status	Indication
Green	Steady	Normal operation—no call for heat
	Fast flash	Normal operation—call for heat
	One flash	System lockout—failed to detect or sustain flame
	Two flashes	Pressure switch did not close within 30 seconds of venter motor
	Three flashes	High limit switch open
	Four flashes	Pressure switch is closed before venter motor is energized
	Steady OFF	Blown fuse, no power, or defective board
Yellow	Steady ON	Flame is sensed
	Slow flash	Weak flame—current below 1.0 (±50%) microamps
	Fast flash	Undesired flame—valve open and no call for heat

Unit Troubleshooting Using Ignition Control Module—Continued

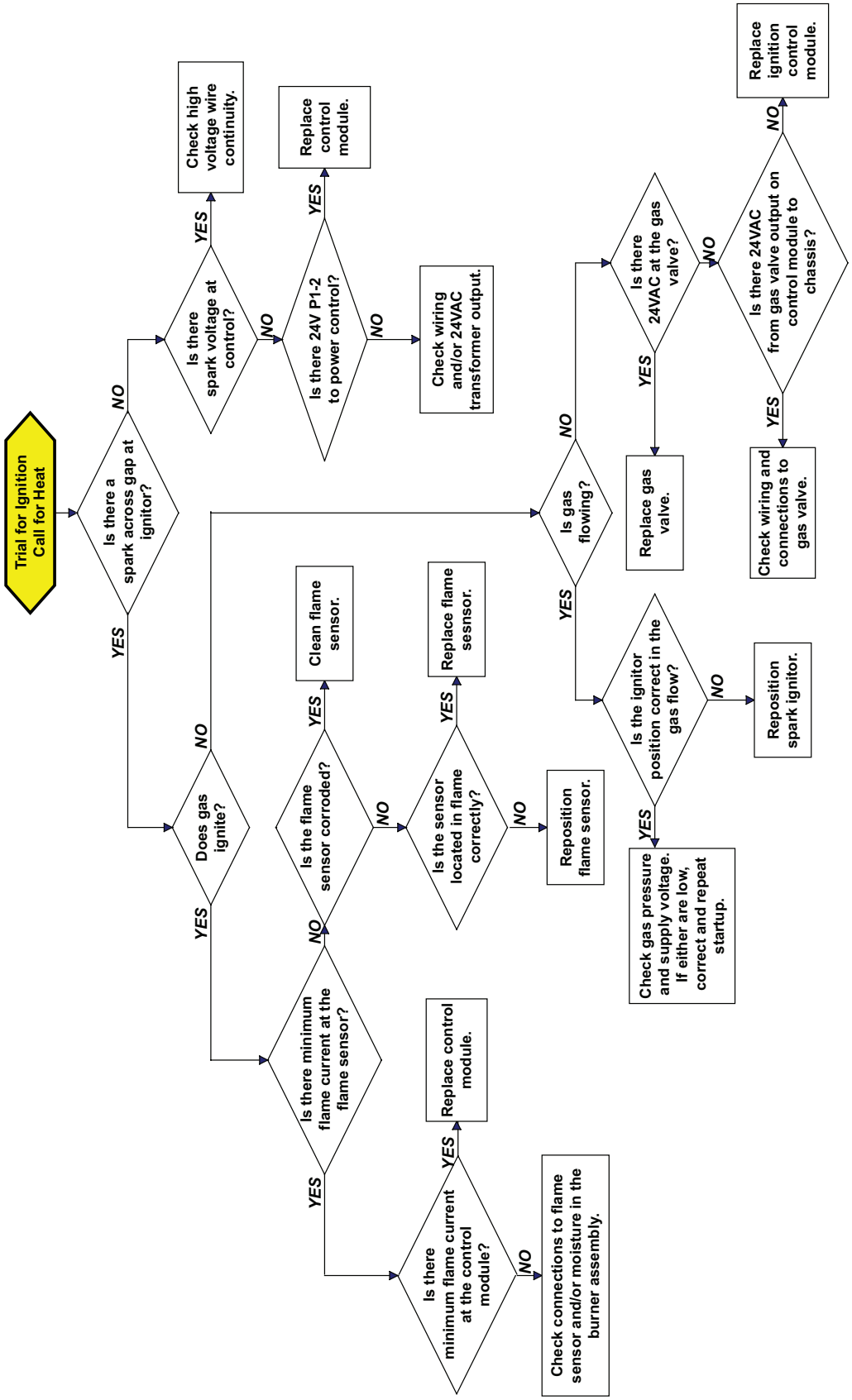

Figure 33. DSI Control Module Troubleshooting Flowchart

NOTES

NOTES

NOTES

INSTALLATION RECORD (TO BE COMPLETED BY INSTALLER)

For service or repair, contact the Installer. For additional assistance, contact the Distributor. For more information, contact your Factory Representative.

Model	Serial No.	Date of Installation	Notes
	Installer	Distributor	
Name			
Company			
Address			
Phone No.			

For more information on Reznor HVAC products:

- **Contact your local Reznor representative at 1-800-695-1901**
- **Refer to the technical specifications, manuals, and consumer materials found at www.reznorhvac.com**

Intertek

Specifications and illustrations subject to change without notice or incurring obligations.
Latest version of this manual is available at **www.reznorhvac.com**.
©2026 Reznor LLC, Saint Charles, MO. All rights reserved.
CAUA-IOM (10-26) 164771-K