REZNOR®

Revision: SC-TSL (10-26) REV-F

Supersedes: SC-TSL (07-25) REV-E

TECHNICAL SPECIFICATIONS FOR MODEL SC

INDOOR COMMERCIAL/INDUSTRIAL SEPARATED-COMBUSTION POWER-VENTED GAS-FIRED DUCT FURNACE



Table of Contents

Unit Sizes . . . 2
Features . . . 2
Factory-Installed Options . . . 2
Field-Installed Options . . . 3
Technical Data . . . 3
Certification . . . 4
Installation Codes . . . 4
Separated Combustion . . . 4
Halogenated Hydrocarbons . . . 4
Unit Location . . . 5
Venting/Combustion Air Requirements . . . 5
Ductwork Requirements . . . 5
Dimensions . . . 6
Weights . . . 7
Clearances . . . 7
Duct Furnace Airflow . . . 7

In keeping with our policy of continuous product improvement, we reserve the right to alter, at any time, the design, construction, dimensions, weights, etc., of equipment information shown here.

TECHNICAL SPECIFICATIONS—CONTINUED

Unit Sizes

These duct furnaces are available in ten unit sizes based on 100,000–400,000 BTUh input.

Features

- Voltage/phase/Hz options: 115/1/60, 208/1/60, 230/1/60, and 460/1/60
- Natural gas or propane
- 80% thermal efficient
- Intermittent spark pilot
- Corrosion-resistant Galvalume® cabinet
- Two threaded suspension couplings for 1-inch pipe hangers
- Separates combustion air from air in heated space
- Aluminized-steel burner with stainless steel insert
- Aluminized-steel heat exchanger—when furnace is installed downstream of air conditioning coil, stainless steel burner and heat exchanger and condensate drain are recommended
- Adjustable fan control, high limit safety control, and post-purge control sequence
- Power venter discharges exhaust air and draws in combustion air from outside
- Combustion air pressure differential switch that verifies power-vent flow for gas valve operation
- May be packaged with blower unit
- 24V control transformer (designed for field-connection to 24V thermostat for automatic operation)

Factory-Installed Options

Option	Description
AA1	Natural gas
AA2	Propane
AB1	Installation elevation of 0–2000 feet
AB2	Installation elevation of 2001–3000 feet
AB3	Installation elevation of 3001–4000 feet
AB4	Installation elevation of 4001–5000 feet
AB5	Installation elevation of 5001–6000 feet
AB6	Installation elevation of 6001–7000 feet
AC1	Aluminized-steel heat exchanger
AC2	409 SST heat exchanger
AD1	Aluminized-steel burner
AD2	409 SST burner
AE1	No burner air shutters
AE2	Burner air shutters (required on propane units)
AF1	Aluminized-steel drip pan/bottom panel
AF2	409 SST drip pan/bottom panel
AGA	US installation rating plate
AG1	Single-stage combination gas valve
AG2	Two-stage combination gas valve
AG3	Two-stage combination gas valve with unit-mounted ductstat
AG8	Electronic modulation with ductstat
AG15	Two-stage combination gas valve with electronic ductstat and remote temperature selector
AG21	Electronic modulation with Maxitrol signal conditioner
AG39	Electronic modulation with 4:1 turndown ratio and remote temperature selector (natural gas units)
AG40	Electronic modulation with 4:1 turndown ratio and DDC interface (natural gas units)
AH2	Intermittent spark pilot
AH3	Intermittent spark pilot with timed lockout
AJ1	Left side controls (facing airstream)
AJ2	Right side controls (facing airstream)

Option	Description
AK1	115/1/60 voltage
AK2	208/1/60 voltage
AK3	230/1/60 voltage
AK9	460/1/60 voltage
BG3A–BG3Z	Various relay options
BP4	High- and low-pressure gas pressure safety switches
BW1	Air flow pressure proving switch
CGA	Canadian installation rating plate
CN1A–CN3Z	Various remote switch options

Field-Installed Options

Option	Description
AG7	Electronic modulation with room thermostat
AG9	Electronic modulation with ductstat and remote temperature selector
CC2	Vertical vent terminal
CC6	Horizontal vent terminal
CE1	Manual shutoff valve, natural gas
CE2	Manual shutoff valve, propane
CL1	Single-stage thermostat
CL9	Electronic modulating room override
CL22	Two-stage thermostat
CL33	Two-stage digital thermostat
CL52	Single-stage digital thermostat
CM1	Locking thermostat cover
CM1B	Large locking thermostat cover
CP2, CP3, CP4, CP41, CP58	Disconnect switches
CS1	Condensate drain flange
SA1	Photoelectric air duct smoke detector

Technical Data

Parameter	Unit of Measure	Unit Size (MBTUh)									
		100	125	150	175	200	225	250	300	350	400
Input heating capacity	BTUh	100,000	125,000	150,000	175,000	200,000	225,000	250,000	300,000	350,000	400,000
	kW	29.3	36.6	44.0	51.3	58.6	65.9	73.3	87.9	102.6	117.2
Output heating capacity (80%)	BTUh	80,000	100,000	120,000	140,000	160,000	180,000	200,000	240,000	280,000	320,000
	kW	23.4	29.3	35.2	41.0	46.9	52.8	58.6	70.3	82.1	93.8
Air volume with finger-baffles	CFM	820–1480	1025–1850	1235–2200	1440–2590	1645–2960	1850–3330	2055–3700	2465–4440	2880–5185	3290–5925
	meter³/hr	1393–2514	1741–3143	2098–3738	2446–4400	2795–5029	3143–5657	3491–6286	4188–7543	4893–8809	5590–10,066
Air volume without finger-baffles*	CFM	985–3700	1230–4630	1480–5555	1725–6480	1975–7405	2020–8330	2465–9255	2960–11,110	3455–12,960	3950–14,815
	meter³/hr	1673–6286	2090–7866	2514–9438	2931–11,009	3355–12,581	3432–14,152	4188–15,724	5029–18,875	5870–22,018	6711–25,170

*High CFM conversion requires removal of the finger baffles. This conversion shall be done by a qualified service agency in accordance with the manufacturer's instructions and all applicable codes and requirements of the authority having jurisdiction.

Parameter	Unit of Measure	Unit Size (MBTUh)	
		100, 125, 150, 175, 200, 225, 250	300, 350, 400
Gas connection, natural gas	inch	1/2	3/4
Gas connection, propane		1/2	
Temperature rise	°F	50–90	
		20–75*	
Full load amps (120V)	amp	1.9	
Unit control amps (24V)		0.83	

Certification

- This unit is design-certified to ANSI and CSA standards by the Canadian Standards Association. All models are approved for installation in the United States and in Canada. All furnaces are approved for use with either natural gas or propane. The type of gas for which the furnace is equipped and the correct firing rate are shown on the rating plate attached to the unit. Electrical characteristics are shown on the unit rating plate.
- These gas-fired products are certified by ANSI Z83 family of standards governing the safe usage of heating equipment in the industrial/commercial marketplace. This includes using the heaters in makeup air applications to supply corridor pressurization in commercial buildings such as office structures and apartment complexes.
- The heaters are not certified as residential heating equipment and should not be used as such.

Installation Codes

- These units must be installed in accordance with local building codes. In the absence of local codes, in the United States, the unit must be installed in accordance with the *National Fuel Gas Code* (NFPA 54/ANSI Z223.1, latest edition). A Canadian installation must be in accordance with the *Natural Gas and Propane Installation Code* (CSA B149, latest edition). This code is available from CSA Information Services, 1-800-463-6727. Local authorities having jurisdiction should be consulted before installation is made to verify local codes and installation procedure requirements.
- Installations in aircraft hangars should be in accordance with the *Standard for Aircraft Hangars* (ANSI/NFPA 409, latest edition). Installations in public garages should be in accordance with the *Standard for Parking Structures* (ANSI/NFPA 88A, latest edition). Installations in repair garages should be in accordance with the *Standard for Repair Garages* (NFPA 88B), which has been incorporated into the *Code for Motor Fuel Dispensing Facilities and Repair Garages* (NFPA 30A, latest edition). In Canada, installations in aircraft hangars and public garages should be in accordance with CSA B149.
- Clearances from the heater and vent to combustible construction or material in storage must conform with the *National Fuel Gas Code* (NFPA 54/ANSI Z223.1, latest edition) pertaining to gas-burning devices, and such material must not attain a temperature over 160°F (71°C) by continued operation of the heater.
- If the heater is being installed in the Commonwealth of Massachusetts, installation must be performed by a licensed plumber or licensed gas fitter.

Separated Combustion

Separated-combustion units are designed to separate air for combustion and flue products from the environment of the building in which the unit is installed. Separated-combustion appliances are recommended for use in dust-laden and some corrosive-fume environments. As the definition states, all separated-combustion, power-vented equipment must be equipped with both combustion-air and exhaust piping to the outdoors. This separated-combustion unit is designed and manufactured in accordance with the ANSI definition of separated combustion, which reads:

> **Separated Combustion System Appliance: A system consisting of an appliance and a vent cap(s) supplied by the manufacturer, and (1) combustion air connections between the appliance and the outside atmosphere, and (2) flue gas connections between the appliance and vent cap, of a type(s) specified by the manufacturer but supplied by the installer, constructed so that, when installed in accordance with the manufacturer's instructions, air for combustion is obtained from the outside atmosphere and flue gases are discharged to the outside atmosphere.**

Halogenated Hydrocarbons

⚠ WARNING ⚠

SC series separated-combustion units are not designed or approved for use in atmospheres containing flammable vapors or atmospheres highly-laden with chlorinated vapors.

Halogenated hydrocarbons are a family of chemical compounds characterized by the presence of halogen elements (fluorine, chlorine, bromine, etc.). These compounds are used in refrigerants, cleaning agents, and solvents and are heavier than air, a fact that should be kept in mind when determining the installation location of heaters and building exhaust systems.

⚠ CAUTION ⚠

CORROSION HAZARD: Halogenated hydrocarbons, when exposed to flame, precipitate with any condensation present in the heater to form hydrochloric acid, which readily attacks all metals, including 300 grade stainless steel. Care should be taken to separate these vapors from the combustion process. An outside air supply MUST BE provided to the burner whenever the presence of these compounds is suspected.

Unit Location

⚠ CAUTION ⚠

Do not locate the unit where it may be exposed to liquid spray, rain, or dripping water.

A duct furnace is designed for connection to an inlet and an outlet duct and depends on an external air handler. The location must comply with the **Clearances** section. There are a variety of factors, such as system application, building structure, dimensions, and weight, that contribute to selecting the location. Read the installation, operation, and maintenance manual provided with the unit and select a location that complies with the requirements.

Venting/Combustion Air Requirements

⚠ WARNING ⚠

Do not use an existing venting system. This heater requires installation of the combustion air/vent system ordered with the unit (either option CC2 or CC6). Vent installation to be any listed vent system manufacturer. Do not intermix different vent system parts from different manufacturers in the same venting system.

- All separated-combustion, power-vented units MUST BE equipped with both combustion air and exhaust piping to the outdoors. The unique concentric adapter box designed for use with this heater allows for both combustion air and exhaust piping with only one horizontal or vertical penetration hole in the building.
- Installation should be done by a qualified agency in accordance with the instructions. The service agency installing this separated-combustion system is responsible for the installation. Refer to the installation, operation, and maintenance manual provided with the unit for further information on ventin/combustion air requirements.

Ductwork Requirements

⚠ CAUTION ⚠

The joint where the supply air duct attaches to the furnace must be sealed securely to prevent air leakage into draft hood or burner rack area. Leakage can cause poor combustion and pilot problems, can shorten heat exchanger life, and can cause poor performance.

NOTE: Make adjustments to ductwork as necessary to obtain a temperature rise and static pressure within the ranges specified on the heater rating plate.

Refer to the installation, operation, and maintenance manual provided with the unit for further information on ductwork requirements.

TECHNICAL SPECIFICATIONS—CONTINUED

Dimensions

NOTES:

Inches (mm)

Standard airflow may be reversed by changing direction of heat exchanger air baffles.

Burner and control access shown left-hand side. Specify right-hand side for opposite access and connections.

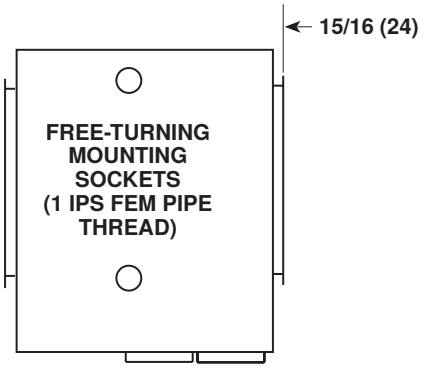

TOP VIEW

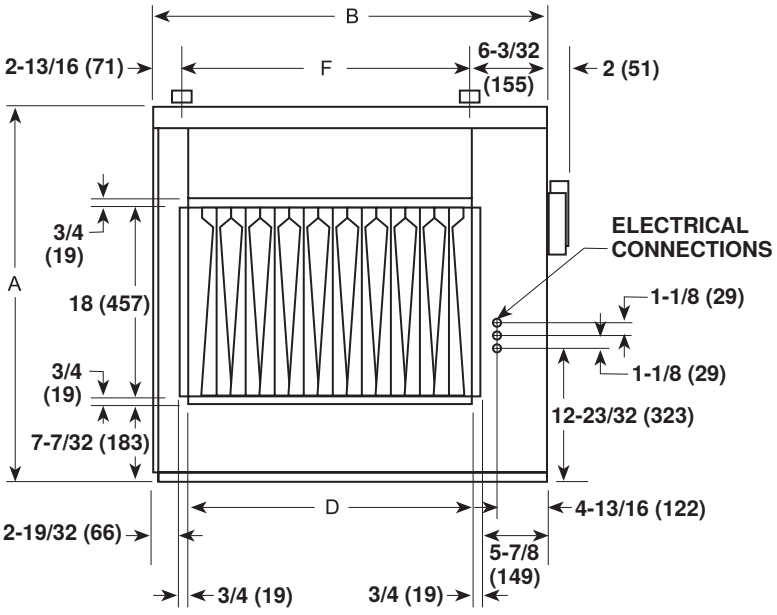

REAR (SUPPLY AIR) VIEW

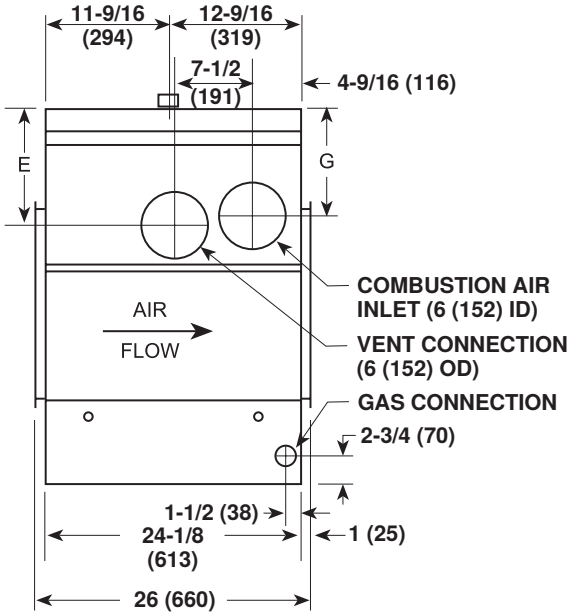

SIDE VIEW

Dimension (See Graphic Above)	Unit Size (MBTUh)						
	100	125	150, 175	200, 225	250, 300	350	400
	Inches (mm)						
A	32-1/4 (819)			35-1/4 (895)			
B	22-15/32 (571)	25-7/32 (641)	30-23/32 (780)	36-7/32 (920)	44-15/32 (1130)	49-31/32 (1269)	55-15/32 (1409)
D	12-1/2 (318)	15-1/4 (387)	20-3/4 (527)	26-1/4 (667)	34-1/2 (876)	40 (1016)	45-1/2 (1156)
E	8-1/8 (206)			10-3/4 (273)			
F	13-9/16 (344)	16-15/16 (430)	21-13/16 (554)	27-5/16 (694)	35-9/16 (903)	41-1/16 (1043)	46-9/16 (1183)
G	6-15/16 (176)			9-15/16 (252)			

Weights

Type	Unit Size (MBTUh)						
	100	125	150, 175	200, 225	250, 300	350	400
	Net Weight (Pounds (kg))						
Unit	158 (72)	178 (81)	203 (92)	283 (128)	321 (146)	350 (159)	410 (186)
Shipping	184 (83)	204 (93)	244 (111)	314 (142)	354 (161)	384 (174)	447 (203)

Clearances

Clearance to combustibles is defined as the minimum distance—from the heater to a surface or object—that is necessary to ensure that a surface temperature of 90°F (50°C) above the surrounding ambient temperature is not exceeded. For safety and convenience, ensure that clearances are as follows:

Unit Surface	Minimum Clearance (Inches (mm))
Top	6 (152)
Control side	6 (152) + width of unit
Side opposite controls	6 (152)
Bottom, to combustibles	6 (152)
Bottom, to noncombustibles	0 (0)

Duct Furnace Airflow

The duct furnace must be installed on the positive pressure side of the field-supplied blower. Air throughput must be within the CFM range stated on the heater rating plate. The air distribution must be even over the entire heat exchanger. To determine temperature rise, the inlet and outlet air temperatures should be measured at points not affected by heat radiating from the heat exchanger. Refer to the following table section for the approved temperature rise range with the required CFM and the internal pressure drop for each size of unit. Refer to the installation, operation, and maintenance manual provided with the unit for suggested blower connections that include turning vanes used in elbows or turns in the air inlet to ensure proper air distribution. If it is determined that the blower CFM is greater than that which is allowed or desirable, refer to the installation, operation, and maintenance manual provided with the unit for instructions on determining the correct size of bypass duct required.

Temperature Rise	Unit Size (MBTUh)									
	100	125	150	175	200	225	250	300	350	400
	CFM/Pressure Drop (IN WC)									
80% Thermal Efficient										
50°F	1480/0.50	1850/0.50	2220/0.36	2590/0.52	2960/0.41	3330/0.53	3700/0.42	4440/0.58	5185/0.67	5925/0.67
55°F	1345/0.34	1680/0.41	2020/0.30	2355/0.43	2690/0.34	3030/0.44	3365/0.35	4040/0.48	4710/0.55	5385/0.55
60°F	1235/0.29	1540/0.34	1850/0.26	2160/0.36	2465/0.28	2775/0.37	3085/0.30	3700/0.40	4320/0.46	4935/0.46
70°F	1055/0.21	1320/0.25	1585/0.19	1850/0.26	2115/0.21	2380/0.27	2645/0.22	3175/0.30	3700/0.34	4230/0.34
80°F	925/0.16	1155/0.19	1385/0.14	1620/0.20	1850/0.17	2080/0.21	2315/0.20	2775/0.23	3240/0.26	3700/0.26
85°F	870/0.14	1085/0.18	1305/0.13	1525/0.18	1740/0.15	1960/0.19	2175/0.20	2610/0.22	3050/0.23	3485/0.23
90°F	820/0.12	1025/0.16	1235/0.12	1440/0.16	1645/0.13	1850/0.17	2055/0.18	2465/0.20	2880/0.21	3290/0.21
With Finger Baffles Removed										
20°F	3700/1.08	4630/1.12	5555/0.85	6480/1.11	7405/1.02	8330/1.24	9255/0.90	11,110/1.24	12,960/1.24	14,815/1.24
30°F	2465/0.48	3085/0.50	3700/0.38	4320/0.50	4935/0.45	5555/0.55	6170/0.40	7405/0.55	8640/0.55	9875/0.55
40°F	1850/0.27	2315/0.28	2775/0.21	3240/0.28	3700/0.25	4165/0.31	4630/0.22	5555/0.31	6480/0.31	7405/0.31
50°F	1480/0.17	1850/0.18	2220/0.14	2590/0.18	2960/0.16	3330/0.20	3700/0.14	4440/0.20	5185/0.20	5925/0.20
60°F	1230/0.13	1540/0.13	1850/0.11	2160/0.14	2465/0.12	2775/0.15	3085/0.11	3700/0.15	4320/0.15	4935/0.15
70°F	1055/0.10	1320/0.11	1585/0.10	1850/0.13	2115/0.10	2380/0.11	2645/0.09	3170/0.11	3700/0.11	4230/0.11
75°F	985/0.09	1230/0.10	1480/0.09	1725/0.11	1975/0.09	2220/0.10	2465/0.08	2960/0.10	3455/0.10	3950/0.10

⚠ DANGER ⚠

FIRE OR EXPLOSION HAZARD

- **Failure to follow safety warnings exactly could result in serious injury, death, or property damage.**
- **Improper installation, adjustment, alteration, service, or maintenance can cause serious injury, death, or property damage.**
- **Installation and service must be performed by a qualified installer, service agency, or the gas supplier.**
- **Do not store or use gasoline or other flammable vapors and liquids in the vicinity of this or any other appliance.**

WHAT TO DO IF YOU SMELL GAS

- **Do not try to light any appliance.**
- **Do not touch any electrical switch; do not use any phone in your building.**
- **Leave the building immediately.**
- **Immediately call your gas supplier from a phone remote from the building. Follow the gas supplier's instructions.**
- **If you cannot reach your gas supplier, call the fire department.**

For more information on Reznor HVAC products:

- **Contact your local Reznor representative at 1-800-695-1901**
- **Refer to the manuals and additional consumer materials found at www.reznorhvac.com**

Specifications and illustrations subject to change without notice or incurring obligations.
Latest version of this document is available at **www.reznorhvac.com**.
©2026 Reznor LLC, Saint Charles, MO. All rights reserved.
SC-TSL (10-26) REV-F