REZNOR®

Revision: FE-BE-IOM (05-26) 098807-A

Supersedes: RZ-NA-I-FE/BE (07-04) PN98807R10

GAS-FIRED POWER-VENTED UNIT HEATER INSTALLATION, OPERATION, AND MAINTENANCE

DISCONTINUED MODELS FE (FAN-TYPE) AND BE (BLOWER-TYPE)

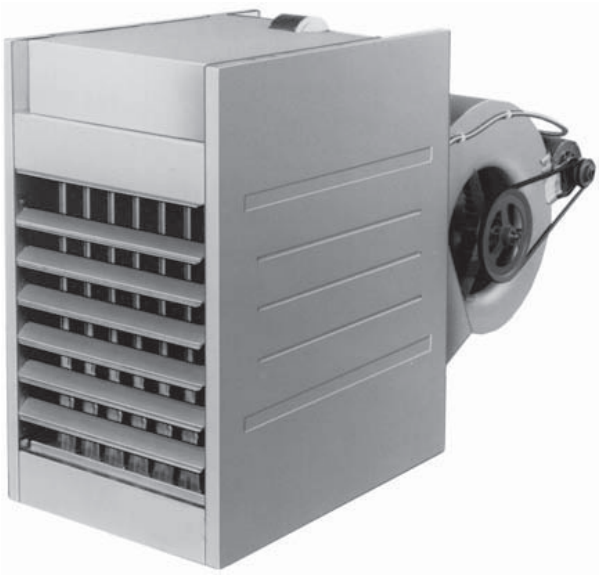

⚠ DANGER ⚠

FIRE OR EXPLOSION HAZARD

- **Failure to follow safety warnings exactly could result in serious injury, death, or property damage.**
- **Improper installation, adjustment, alteration, service, or maintenance can cause serious injury, death, or property damage.**
- **Installation and service must be performed by a qualified installer, service agency, or the gas supplier.**
- **Be sure to read and understand the installation, operation, and service instructions in this manual.**
- **Do not store or use gasoline or other flammable vapors and liquids in the vicinity of this or any other appliance.**

WHAT TO DO IF YOU SMELL GAS

- **Do not try to light any appliance.**
- **Do not touch any electrical switch; do not use any phone in your building.**
- **Leave the building immediately.**
- **Immediately call your gas supplier from a phone remote from the building. Follow the gas supplier's instructions.**
- **If you cannot reach your gas supplier, call the fire department.**

DO NOT DESTROY. PLEASE READ CAREFULLY. KEEP IN A SAFE PLACE FOR FUTURE REFERENCE.

Table of Contents

Installation and Operation ..... Paragraph 1-24 ..... Pages 1-19
Check Installation and Start-Up ..... Paragraph 25 ..... Page 20
Optional Equipment ..... Paragraph 26-32 .... Pages 21-23
Service/Maintenance/Troubleshooting ... Paragraph 33-43 .... Pages 23-28

Index by Page
Belt Tension 17
Blower/Filter Cabinet (Optional) 23
Blower Motor 17
Blower Rotation 18
Blower Speed Adjustment 17
Bottom Access 24
Burners 19, 24
Burner Air Adjustment 19
Burner Rack Removal 24
Carryover, Flash 25
Check Installation and Start-Up 20
Clearances 6
Combustion Air Proving Switch 19
Combustion Air 6
Confined Space Installation 6
Dimensions 3
Disconnect Switch 12
Duct Flange (Blower Model Option) 21
Electrical Supply and Connections 12
Fan Blade 25

Index by Page
Fan Control 18, 26
Fan Motor 17
Gas Piping and Pressures 10
Guard Options (Blower Model) 22
Hanger Kits (Optional) 7
Hazard Intensity Levels 2
Heat Exchanger 25
High Altitude Combustion Air Pressure Switch 5, 11
High Altitude Operation 5
Ignition System 19, 25
Installation Codes 2
Limit Control 18, 26
Location (Heater) 5
Louvers, Vertical (Optional) 21
Maintenance 23
Maintenance Schedule 23
Manifold Pressure 11
Multiple Heater Control Option 23

Index by Page
Nozzles, Downturn Air (Optional) 21
Optional Equipment 20
Operating Sequence 19
Orifices, Burner and Pilot 25
Pilot 19, 25
Polytube Adapter (Blower Model Option) 21
Service 23
Spark Gap 25
Suspending the Heater 6
Thermostat and Connections 12
Troubleshooting 27
Uncrating and Preparation 2
Valve, Gas 19, 26
Venter Motor and Relay 26
Venting 8, 25
Warranty 2
Wiring Diagrams 13-16

REFERENCES: **Replacement Parts, Form RZ-NA 726**
Gas Conversion, Form RZ-NA 434/436-GC

FOR YOUR SAFETY

If you smell gas:

1. Open windows.

2. Don't touch electrical switches.

3. Extinguish any open flame.

4. Immediately call your gas supplier.

FOR YOUR SAFETY

The use and storage of gasoline or other flammable vapors and liquids in open containers in the vicinity of this appliance is hazardous.

WARNING: Gas-fired appliances are not designed for use in hazardous atmospheres containing flammable vapors or combustible dust, in atmospheres containing chlorinated or halogenated hydrocarbons, or in applications with airborne silicone substances. See Hazard Levels, Page 2.

WARNING: Improper installation, adjustment, alteration, service, or maintenance can cause property damage, injury or death. Read the installation, operation, and maintenance instructions thoroughly before installing or servicing this equipment.

GENERAL

Installation should be done by a qualified agency in accordance with the instructions in this manual and in compliance with all codes and requirements of authorities having jurisdiction. The instructions in this manual apply to the unit heater models listed below.

Model FE

Model BE

Model	Fuel	Vent	Air Delivery
FE	Gas-Fired	Power	Propeller Fan
BE	Gas-Fired	Power	Centrifugal Blower (heater may be attached to ductwork)

HAZARD INTENSITY LEVELS

1. **DANGER: Failure to comply will result in severe personal injury or death and/or property damage.**
2. **WARNING: Failure to comply could result in severe personal injury or death and/or property damage.**
3. **CAUTION: Failure to comply could result in minor personal injury and/or property damage.**

1. Installation Codes

The gas-fired unit heaters covered in this manual are design-certified by the Canadian Standards Association (CSA) to ANSI Z83.8a and CGA 2.6a for industrial/commercial installations in the United States and Canada. All heaters are available for use with either natural or propane gas. The type of gas, the firing rate, and the electrical characteristics are on the unit rating plate.

These units must be installed in accordance with local building codes. In the absence of local codes, in the United States, the unit must be installed in accordance with the National Fuel Gas Code (latest edition). A Canadian installation must be in accordance with the CAN/CGA B149.1 and B149.2 Installation Code for Gas Burning Appliances and Equipment. These codes are available from CSA Information Services, 1-800-463-6727. Local authorities having jurisdiction should be consulted before installation to verify local codes and installation procedure requirements.

Special Installations (Aircraft Hangars/ Garages)

Installations in aircraft hangars should be in accordance with ANSI/ NFPA No. 409 (latest edition), Standard for Aircraft Hangars; in public garages in accordance with ANSI/NFPA No. 88A (latest edition), Standard for Parking Structures; and for repair garages in accordance with ANSI/NFPA No. 88B (latest edition), Standard for Repair Garages. ANSI/NFPA-88 (latest edition) specifies overhead heaters must be installed at least eight feet above the floor. In Canada, installations in aircraft hangars should be in accordance with the requirements of the enforcing authorities, and in public garages in accordance with CAN/ CGA B149 codes.

ANSI/NFPA 409 (latest edition) specifies a clearance of ten feet to the bottom of the heater from the highest surface of the top of the wing or engine enclosure of whatever aircraft would be the highest to be housed in the hangar, and a minimum clearance of eight feet from the floor in other sections of aircraft hangars, such as the offices, and shops which communicate with areas used for servicing or storage. The heaters must be located so as to be protected from damage by aircraft or other objects such as cranes and movable scaffolding. In addition, the heaters must be located so as to be accessible for servicing, adjustment, etc.

2. Warranty

Refer to limited warranty information on the warranty card in the "Owner's Envelope".

WARRANTY: Warranty is void if.....

a. Unit Heaters are used in atmospheres containing flammable vapors or atmospheres containing chlorinated or halogenated hydrocarbons or airborne silicone substances.

b. Wiring is not in accordance with the diagram furnished with the heater.

c. Unit is installed without proper clearances to combustible materials or located in a confined space without proper ventilation and air for combustion. (See Paragraphs 7 and 8.)

d. Fan-type unit heater is connected to a duct system.

3. Uncrating and Preparation

This unit was test operated and inspected at the factory prior to crating and was in operating condition. If the heater has incurred any damage in shipment, document the damage with the transporting agency and immediately contact your Reznor Distributor.

Check the rating plate for the gas specifications and electrical characteristics of the heater to be sure that they are compatible with the gas and electric supplies at the installation site. Read this booklet and become familiar with the installation requirements of your particular heater. If you do not have knowledge of local requirements, check with the local gas company or any other local agencies who might have requirements concerning this installation. Before beginning, make preparations for necessary supplies, tools, and manpower.

Check to see if there are any field-installed options that need to be assembled to the heater prior to installation. Each of the option packages includes a list of components and step-by-step instructions. For a brief description of optional hanger kits, refer to Paragraph 9. For a brief explanation of other frequently specified field-installed options, see Paragraphs 26-32. After becoming familiar with the instructions, assemble and install the options that are required for your heater.

If the heater was ordered with a vent cap, it will be shipped in a separate carton.

Unless the crate bottom has been removed for option installation, leave it attached until after the heater has been suspended. If the crate bottom has been removed, the bottom of the heater must be supported with plywood or appropriately placed boards. Without adequate support, the bottom access panel could be damaged.

To protect the unit during shipping, the **blower model** has special supports that must be removed before installation. Follow these instructions to remove:

- ☐ Blower Support Legs -- Remove the two blower support legs and screws.
- ☐ Motor Shipping Block - Remove the wooden block located under the motor bracket. Find the two rubber pads shipped in the instruction envelope. Place these pads on the ends of the motor bracket bolts.
- ☐ Motor Shipping Plate -- Blower models that are equipped with motors of 3/4 HP or less have a metal shipping plate attached between the motor and the blower housing. Remove and discard the shipping plate. **Note**: On units factory equipped with an optional belt guard, the belt guard must be removed in order to reach the shipping plate.

4. Dimensions

Fan-Type, Power-Vented Unit Heater

Figure 1A - Model FE Dimensions - inches (mm)

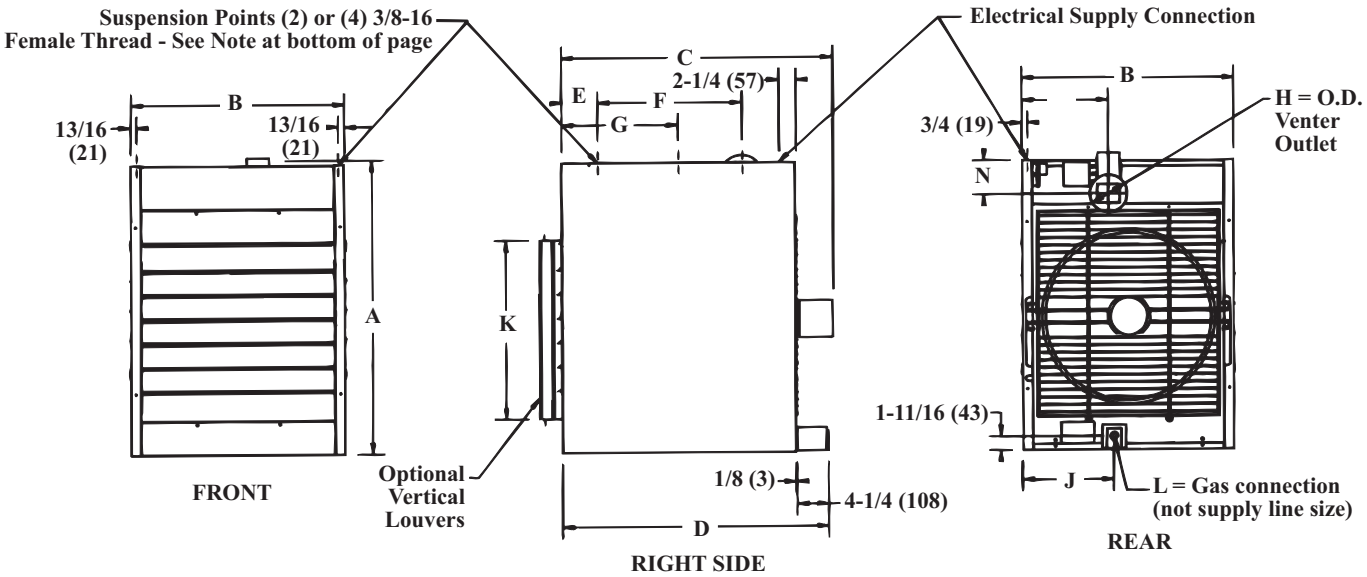

Dimensions (inches)

Size	A	B	C	D	E	F	G	H	J	K	L		M	N
											Nat	Pro		
25	29-25/32	13-9/16	27-1/16	31-7/16	5-27/32	14-7/16	14-1/32	4	10-9/32	16	1/2	1/2	9-13/16	3
50	29-25/32	13-9/16	27-1/16	31-7/16	5-27/32	14-7/16	14-1/32	4	10-9/32	16	1/2	1/2	9-13/16	3
75	29-25/32	15-9/16	27-1/16	31-7/16	5-27/32	14-7/16	14-1/32	4	10-17/32	16	1/2	1/2	10-7/16	3
100	29-25/32	17-9/16	30-7/16	31-7/16	5-27/32	14-7/16	14-1/32	4	12-29/32	16	1/2	1/2	10-7/16	3
125	29-25/32	23-5/16	30-7/16	31-7/16	5-27/32	14-7/16	14-1/32	5	14-7/16	16	1/2	1/2	11-9/16	2-5/8
165	39-15/16	20-5/16	35-7/16	35-15/16	4-7/8	19-15/32	15-23/32	5	14-9/32	24	1/2	1/2	11-11/16	4-19/32
200	39-15/16	23-5/16	36-3/16	35-15/16	4-7/8	19-15/32	15-23/32	5	14-13/32	24	1/2	1/2	11-11/16	4-19/32
250	39-15/16	28-13/16	36-3/16	35-15/16	4-7/8	19-15/32	15-23/32	5	12-11/32	24	1/2	1/2	11-11/16	4-19/32
300	39-15/16	28-13/16	36-11/16	35-15/16	4-7/8	19-15/32	15-23/32	6	12-11/32	24	3/4	1/2	11-11/16	3-19/32
400	39-15/16	37-1/16	37-5/16	35-15/16	4-7/8	19-15/32	15-23/32	6	13	24	3/4	1/2	11-11/16	3-19/32

Dimensions (mm)

Size	A	B	C	D	E	F	G	H	J	K	L		M	N
											Nat	Pro		
25	756	344	687	799	148	367	356	102	261	406	13	13	249	76
50	756	344	687	799	148	367	356	102	261	406	13	13	249	76
75	756	395	687	799	148	367	356	102	267	406	13	13	265	76
100	756	446	773	799	148	367	356	102	328	406	13	13	265	76
125	756	592	773	799	148	367	356	127	367	406	13	13	294	67
165	1014	516	900	913	124	498	399	127	363	610	13	13	297	117
200	756	592	919	913	124	498	399	127	366	610	13	13	297	117
250	756	732	919	913	124	498	399	127	314	610	13	13	297	117
300	756	732	932	913	124	498	399	152	314	610	19	13	297	91
400	756	941	948	913	124	498	399	152	330	610	19	13	297	91

Suspension Notes: Use Dimension "G" for two-point suspension and "E" and "F" for four-point suspension. (Two-point suspension is standard; four-point is optional. Four-point suspension is available either factory or field installed.)

4. Dimensions (cont'd)

Blower-Type, Power-Vented Unit Heater

Figure 1B - Model BE Dimensions - inches (mm)

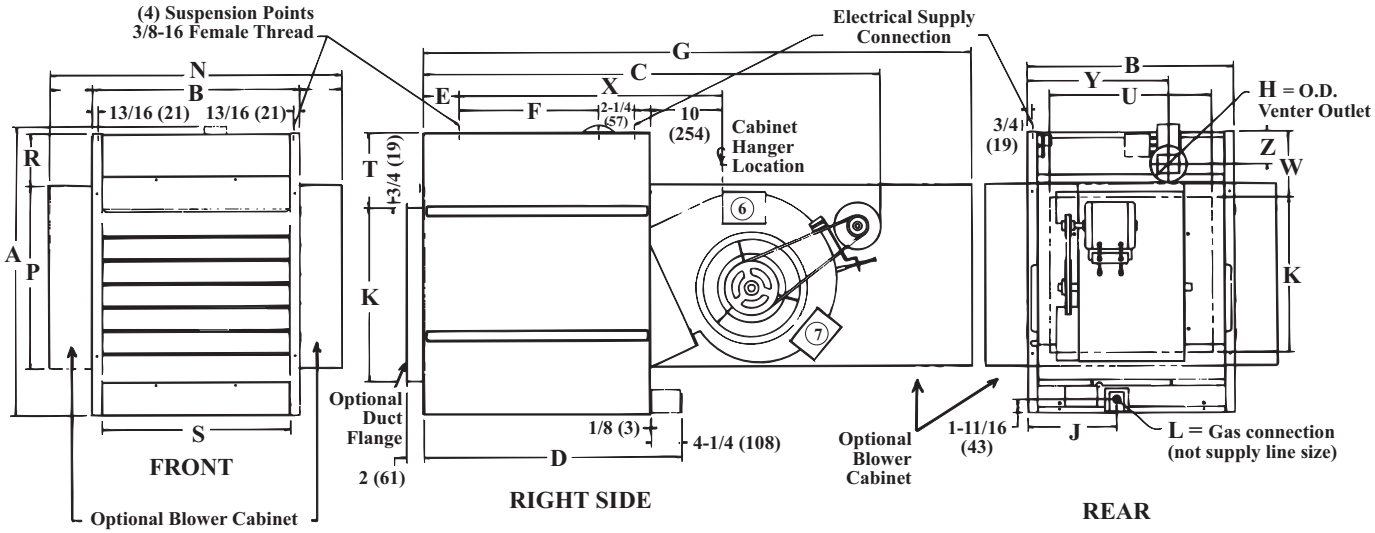

Dimensions (inches)

Size	A	B	C[H]	D	E	F[D] Hanger	G[A C]	H	J	K[A B]	L Nat	L Pro
25	29-25/32	13-9/16	43-3/8	31-7/16	5-27/32	14-7/16	61-3/8	4	10-9/32	16	1/2	1/2
50	29-25/32	13-9/16	50	31-7/16	5-27/32	14-7/16	61-3/8	4	10-9/32	16	1/2	1/2
75	29-25/32	15-9/16	50	31-7/16	5-27/32	14-7/16	61-3/8	4	10-17/32	16	1/2	1/2
100	29-25/32	17-9/16	50	31-7/16	5-27/32	14-7/16	61-3/8	4	12-29/32	16	1/2	1/2
125	29-25/32	23-5/16	47-1/2	31-7/16	5-27/32	14-7/16	65-29/32	5	14-7/16	16	1/2	1/2
165	39-15/16	20-5/16	61	35-15/16	4-7/8	19-15/32	76-1/8	5	14-9/32	24	1/2	1/2
200	39-15/16	23-5/16	66-1/2	35-15/16	4-7/8	19-15/32	76-1/8	5	14-13/32	24	1/2	1/2
250	39-15/16	28-13/16	66-1/2	35-15/16	4-7/8	19-15/32	76-1/8	5	12-11/32	24	1/2	1/2
300	39-15/16	28-13/16	66-1/2	35-15/16	4-7/8	19-15/32	76-1/8	6	12-11/32	24	3/4	1/2
400	39-15/16	37-1/16	66-1/2	35-15/16	4-7/8	19-15/32	76-1/8	6	13	24	3/4	1/2

Size	M[A]	N[A]	P[A]	R[A]	S[B]	T[B]	U[A]	W[A]	X[E] Hanger	Y	Z
25	3-23/32	20-15/16	17-3/4	5-1/4	10-3/4	8-7/16	14-3/4	6-3/16	31-7/32	9-13/16	3
50	3-23/32	20-15/16	17-3/4	5-1/4	10-3/4	8-7/16	14-3/4	6-3/16	31-7/32	9-13/16	3
75	2-23/32	20-15/16	17-3/4	5-1/4	12-3/4	8-7/16	14-3/4	6-3/16	31-7/32	10-7/16	3
100	1-23/32	20-15/16	17-3/4	5-1/4	14-3/4	8-7/16	14-3/4	6-3/16	31-7/32	10-7/16	3
125	1-11/32	20-15/16	17-3/4	5-1/4	20-1/2	8-7/16	20-1/2	6-3/16	35-3/4	11-9/16	2-5/8
165	2-27/32	25-15/16	25-1/4	7-1/4	17-1/2	11-7/16	20-1/2	7-15/16	36-11/16	11-11/16	4-19/32
200	1-11/32	25-15/16	25-1/4	7-1/4	20-1/2	11-7/16	20-1/2	7-15/16	36-11/16	11-11/16	4-19/32
250	5-29/32	40-9/16	25-1/4	7-1/4	26	11-7/16	26	7-15/16	36-11/16	11-11/16	4-19/32
300	5-29/32	40-9/16	25-1/4	7-1/4	26	11-7/16	26	7-15/16	36-11/16	11-11/16	3-19/32
400	6-25/32	50-9/16	25-1/4	7-1/4	34-1/4	11-7/16	34-1/4	7-15/16	36-11/16	11-11/16	3-19/32

Dimensions (mm)

Size	A	B	C[H]	D	E	F[D] Hanger	G[A C]	H	J	K[A B]	L Nat	L Pro
25	756	344	1102	799	148	367	1559	102	261	406	13	13
50	756	344	1270	799	148	367	1559	102	261	406	13	13
75	756	395	1270	799	148	367	1559	102	267	406	13	13
100	756	446	1270	799	148	367	1559	102	328	406	13	13
125	756	592	1207	799	148	367	1674	127	367	406	13	13
165	1014	516	1549	913	124	495	1934	127	363	610	13	13
200	1014	592	1689	913	124	495	1934	127	366	610	13	13
250	1014	732	1689	913	124	495	1934	127	314	610	13	13
300	1014	732	1689	913	124	495	1934	152	314	610	19	13
400	1014	941	1689	913	124	495	1934	152	330	610	19	13

Size	M[A]	N[A]	P[A]	R[A]	S[B]	T[B]	U[A]	W[A]	X[E] Hanger	Y	Z
25	94	532	481	133	273	214	375	157	793	249	76
50	94	532	481	133	273	214	375	157	793	249	76
75	69	532	481	133	324	214	375	157	793	265	76
100	44	532	481	133	375	214	375	157	793	265	76
125	34	532	481	133	521	214	521	157	908	294	67
165	72	659	641	184	445	291	521	202	932	297	117
200	34	659	641	184	521	291	521	202	932	297	117
250	150	1030	641	184	660	291	660	202	932	297	117
300	150	1030	641	184	660	291	660	202	932	297	91
400	172	1284	641	184	870	291	870	202	932	297	91

NOTES

[A] When equipped with optional blower cabinet.
[B] When equipped with optional duct flange.
[C] Dimension includes a 3/4" flange on the rear of the blower cabinet.
[D] Use with 4-point suspension without blower cabinet. If installing hanger kit Option CK19, suspension points change; see Paragraph 9.
[E] Use with 4-point suspension with blower cabinet.
[F] Contactor is standard on Models 300 and 400; optional on other sizes.
[G] Contactor location with optional three phase motors on Sizes 50, 75, 100 and 125.
[H] Deduct 6-5/8" (168mm) on Sizes 50, 75, and 100 when equipped with direct drive motor.

5. High Altitude Operation

If the heater is being installed in an altitude above 2000 ft (610M), check the rating plate to determine what must be done to prepare the heater for high altitude operation.

NOTE: A heater equipped with a two-stage valve must be factory-built for high altitude installation.

Check the rating plate, determine which circumstance below applies, and follow the instructions.

- *If* the altitude range on the rating plate **agrees with the altitude at the site**, no further action is required. Proceed with the installation.
- *If* the altitude range on the rating plate **reads "Sea Level" and the altitude at the site is between 2000 ft and 6000 ft (610M to 1830M)** ***and*** **the heater has a single-stage gas valve**, install the heater and follow the instructions in Paragraph 11 to derate by manifold gas pressure adjustment.
- *If* the altitude range on the rating plate **reads "Sea Level" and the altitude at the site is above 6000 ft (1830M)** ***and*** **the heater has a single-stage gas valve**, in addition to adjusting the manifold pressure, it will be necessary to replace the combustion air pressure switch. Order the listed below and replace the switch before suspending the heater.

  After the heater is installed, follow the instructions in Paragraph 11 to derate by adjusting the manifold gas pressure.

High Altitude Combustion Air Pressure Switch

P/N	Description
159180	#PPS10027-2733

Figure 2- Pressure Switch Location (above 6000 ft, replace with a pressure switch set for high altitude operation)

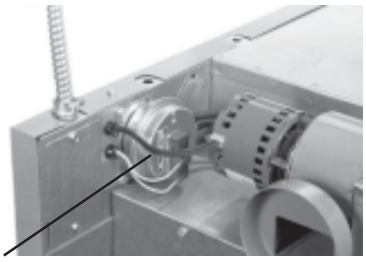

Pressure Switch

6. Unit Heater Location

CAUTION: Avoid installing a unit heater in extremely drafty areas. Extreme drafts can shorten the life of the heat exchanger and/or cause safety problems.

For best results, the heater should be placed with certain rules in mind. In general, a unit should be located from 8 to 12 feet (2.4-3.7M) above the floor. Units should always be arranged to blow toward or along exposed wall surfaces, if possible. Where two or more units are installed in the same room, a general scheme of air circulation should be maintained for best results.

Suspended heaters are most effective when located as close to the working zone as possible, and this fact should be kept in mind when determining the mounting heights to be used. However, care should be exercised to avoid directing the discharged air directly on the room occupants.

Partitions, columns, counters, or other obstructions should be taken into consideration when locating the unit heater so that a minimum quantity of airflow will be deflected by such obstacles.

When units are located in the center of the space to be heated, the air should be discharged toward the exposed walls. In large areas, units should be located to discharge air along exposed walls with extra units provided to discharge air in toward the center of the area.

At those points where infiltration of cold air is excessive, such as at entrance doors and shipping doors, it is desirable to locate the unit so that it will discharge directly toward the source of cold air from a distance of 15 to 20 feet (4.6-6.1M).

Units should not be installed closer than 18 inches (457mm) from any wall.

CAUTION: Do not locate the heater where it may be exposed to water spray, rain or dripping water.

7. Clearances and Combustion Air

Units must be installed so that the following clearances are provided for combustion air space, service and inspection, and for proper spacing from combustible construction. Clearance to combustibles is defined as the minimum distance from the heater to a surface or object that is necessary to ensure that a surface temperature of 90°F above the surrounding ambient temperature is not exceeded.

Model Size	Required Clearances (inches and mm)				
	Top	Flue Collector	Sides	Bottom	Rear
25-400	6"(152)	6"(152)	18"(457)	12"(305) *	24" (610)**

* When supplied with optional downturn nozzle, bottom clearance is 42"(1067mm). For service purposes, on standard units, bottom clearance exceeding minimum (12" or 305mm) is not required but may be desirable.

** For servicing purposes only, rear **must** remain full open.

All fuel-burning equipment must be supplied with the air that enters into the combustion process and is then vented to the outdoors. Sufficient air must enter the equipment location to replace that exhausted through the heater vent system. In the past, the infiltration of outside air assumed in heat loss calculations (one air change per hour) was assumed to be sufficient. However, current construction methods utilizing more insulation, vapor barriers, tighter fitting and gasketed doors and windows or weather-stripping, and mechanical exhaust fans may now require the introduction of outside air through wall openings or ducts.

The requirements for combustion and ventilation air depend upon whether the unit is located in a confined or unconfined space. An "unconfined space" is defined as a space whose volume is not less than 50 cubic feet per 1000 BTUH of the installed appliance. **Under all conditions**, enough air must be provided to ensure there will not be a negative pressure condition within the equipment room or space. For specific requirements for confined space installation, see Paragraph 8.

WARNING: These power-vented unit heaters are designed to take combustion air from the space in which the unit is installed and are not designed for connection to outside combustion air intake ducts. Connecting outside air ducts voids the warranty and could cause hazardous operation. See Hazard Levels, Page 2.

8. Combustion Air Requirements for a Heater Located in a Confined Space

Do not install a unit in a confined space without providing wall openings leading to and from the space. Provide openings near the floor and ceiling for ventilation and air for combustion as shown in Figure 3, depending on the combustion air source as noted in Items 1, 2, and 3 below the illustration.

Figure 3 - Confined Space: A space whose volume is less than 50 cubic feet per 1000 BTUH of the installed appliance input rating

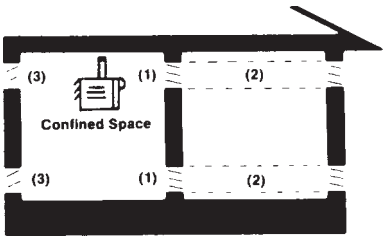

Add total BTUH of all appliances in the confined space and divide by figures below for square inch free area size of each (top and bottom) opening.

1. Air from inside the building -- openings 1 square inch free area per 1000 BTUH. Never less than 100 square inches free area for each opening. See (1) in Figure 3.

2. Air from outside through duct -- openings 1 square inch free area per 2000 BTUH. See (2) in Figure 3.

3. Air direct from outside -- openings 1 square inch free area per 4000 BTUH. See (3) in Figure 3.

NOTE: For further details on supplying combustion air to a confined space, see the National Fuel Gas Code ANSI Z223.1a (latest edition).

9. Suspending the Heater

Before suspending the heater, check the supporting structure to be used to verify that it has sufficient load-carrying capacity to support the weight of the unit.

Net Weight (lbs and kg)											
Model Type		Size									
		25	50	75	100	125	165	200	250	300	400
Fan	lbs	76	83	92	101	132	154	175	209	226	281
	kg	34	38	42	46	60	70	79	95	103	127
Blower	lbs	97	104	118	130	180	206	240	278	301	395
	kg	44	47	54	59	82	93	109	126	137	179

NOTE: If the installation includes an optional stepdown transformer kit (Option CF or CG), the stepdown transformer bracket is part of the heater suspension and must be installed prior to hanging the heater. Follow the instructions on the installation sheet included with the option kit.

A **fan-type unit heater** is equipped with standard two-point suspension. A 3/8-16 threaded hanger bracket assembly is located on each side of the heater. If a fan-type unit has been ordered with optional, factory-installed, four-point suspension (Option BJ6), it will have two threaded hanger brackets on each side.

A **blower-type heater** is equipped with standard four-point suspension. Two 3/8-16 threaded hanger bracket assemblies are located on each side of the unit. Each hanger bracket assembly is designed for threaded rod attachment.

For both "standard" and "optional" suspension point dimensions, see Dimension Tables in Paragraph 3. (Note: If installing Option CK19 hanger kit, suspension points change; see Figure 7.)

WARNING: Suspend the heater only from the threaded hanger brackets. Do not suspend from the heater side panel.

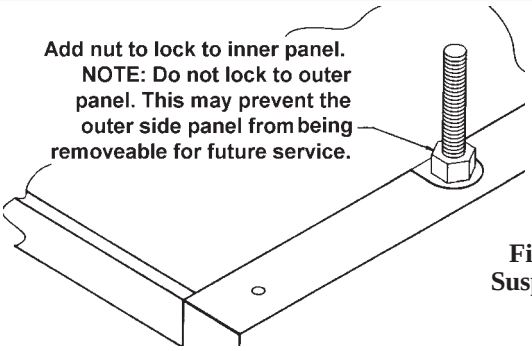

Figure 4 - Suspension

When the heater is lifted for suspension, the bottom must be protected. If the wooden crate bottom has been removed, the bottom of the heater will have to be supported with plywood or other appropriately placed material. If the bottom is not supported, the bottom access panel could be damaged. Also, when lifting a blower unit, support the blower and motor to prevent the unit from tipping.

All blower models have legs that support the blower assembly during shipping. After the unit is suspended, these legs should be removed.

Be sure that the threaded hanger rods are locked to the heater as shown in Figure 4.

WARNING: Unit must be level for proper operation. Do not place or add additional weight to the suspended heater. See Hazard Levels, page 2.

If an **optional downturn air nozzle** is used, the unit must be suspended from four points to ensure level suspension. Two hanger brackets are included in the downturn option package and must be field-installed on fan-type units with standard two-point suspension. For additional information, refer to Paragraph 27 and the instructions that are furnished with the option package.

When **blower-type** units are equipped with an **optional blower/filter cabinet**, there are two suspension points on the blower cabinet hanger bar. Suspend a unit equipped with a blower/filter cabinet from four points, using the two heater hanger bracket assemblies closest to the front of the heater and the two suspension points on the blower/filter cabinet.

If one of the optional, field-installed hanger kits has been ordered for your heater, it will have been shipped separately. Each option package includes a list of components and complete, step-by-step assembly instructions.

Optional, Field-Installed Hanger Kits:

1) Four-Point Suspension (fan models only) - Option CK7

This option kit is designed to convert a fan-type heater from standard two-point suspension to four-point suspension. The kit contains two additional hanger brackets.

2) Two-Point Swivel Connectors (fan models only) - Option CK8 (See Figure 5)

The purpose of this option kit is to adapt the standard hanger bracket so that the heater can be suspended from 1", threaded, stationary pipe. The swivel connector screws "into" the threaded hanger bracket on the heater and "onto" the 1" threaded pipe used for hanging the heater. The kit includes two swivel hanger connector assemblies and two lock washers.

Figure 5 - Two-Point Suspension with Swivel Connections (fan models only)

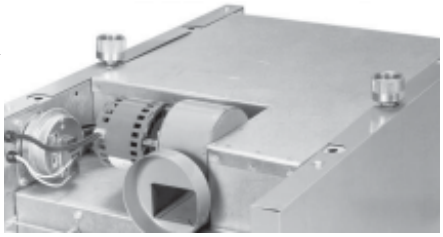

3) Four-Point with Swivel Connectors (fan-models only) - Option CK9 (See Figure 6)

This option package is designed to convert a fan-type heater from standard two-point suspension to four-point suspension with swivel connectors. By installing this kit the standard fan-type heater can be hung from four 1", threaded, stationary pipes. The kit includes two hanger bracket assemblies, four swivel hanger connector assemblies and four lock washers.

4) Four-Point Swivel Connectors - Option CK10 (See Figure 6)

This option package is used on a heater that is already equipped with four-point suspension to adapt it for suspension from four 1", threaded, stationary pipes. The kit includes four swivel hanger connector assemblies and four lock washers.

Figure 6 - Four-Point Suspension with Swivel Connections (Applies to both fan and blower models)

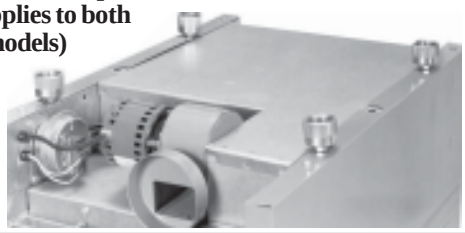

5) Special Four-Point Suspension with Nearly Equal Loading (applies to blower models only) - Option CK19 (See Figure 7)

This suspension option is designed for special applications when a suspension system is needed that has nearly equal loading at all four suspension points. Use this option in installations with spring isolation designed for seismic protection or when threaded rod hangers are longer than twelve inches.

Suspension points change with the addition of hanger kit Option CK19; see Figure 7.

Figure 7 - Suspension Dimensions for Model B Heater with Hanger Kit Option CK19

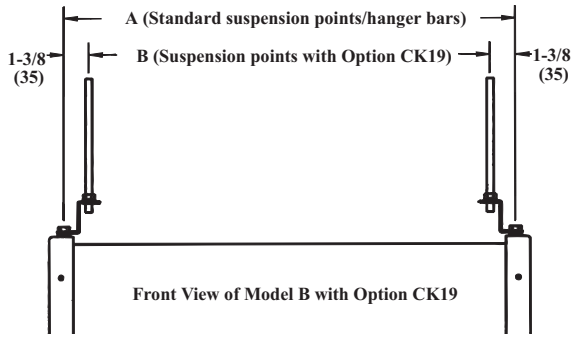

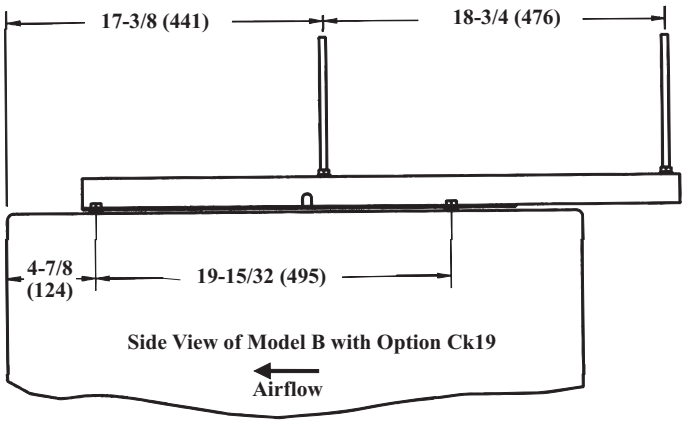

Dimensions (inches)

Size	A	B
25-50	11-7/8	9-1/8
75	13-7/8	11-1/8
100	15-7/8	13-1/8
125	21-5/8	18-7/8
165	18-5/8	15-7/8
200	21-5/8	18-7/8
250	27-1/8	24-3/8
300	27-1/8	24-3/8
400	35-3/8	32-5/8

Dimensions (mm)

Size	A	B
25-50	302	232
75	352	283
100	403	333
125	549	479
165	473	403
200	549	479
250	689	619
300	689	619
400	899	829

10. Venting

These power-vented unit heaters are designed to operate safely and efficiently with either a horizontal or vertical vent. (Horizontal vent run is recommended for maximum fuel savings.)

WARNING: Units installed in multiples require individual vent pipe runs and vent caps. Manifolding of vent runs is not permitted due to possible recirculation of combustion products into the building and possible back pressure effects on the combustion air proving switch.

Specific Venting Requirements (read all before installing)

1. Venter (Flue) Outlet

Venter Outlet Size:

Model Size	Outlet Diameter
25-100	4"
125-250	5"
300-400	6"

Venter Outlet Attachment Requirements:

- If the pipe used in the vent run is larger than the diameter of the venter outlet (See Vent Length Table 2), Make the transition at the venter outlet.
- A minimum of 12" (305mm) of straight pipe is required at the venter outlet (or transition fitting) before installing an elbow in the vent system. An elbow should never be attached directly to the venter. An elbow attached to the straight pipe can be in any position at or above horizontal. See Figure 8.

Figure 8 - Alternate Vent Directions (vent in any position above horizontal; minimum of 12" (305mm) of straight pipe is required before an elbow)

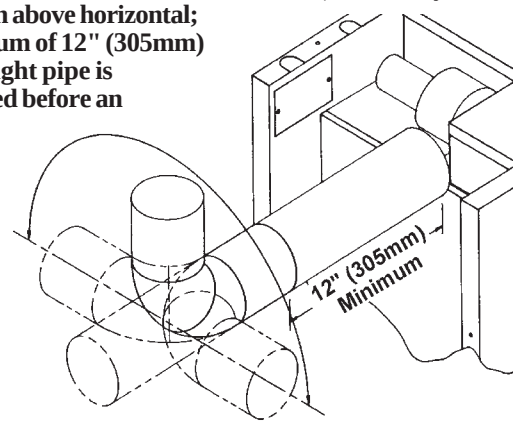

2. Vent Pipe

If installed with a horizontal vent run, use either vent pipe approved for a Category III heater or appropriately sealed 26-gauge galvanized steel or equivalent single-wall pipe.

If at least half of the equivalent length of the vent system is vertical, vent pipe approved for a Category I heater may be used. Single-wall pipe or double-wall (Type B) vent pipe are suitable for use with a Category I heater.

Use only one of the flue pipe diameters listed in the Vent Length Tables for the furnace size being installed.

2A. Vent Pipe Diameter Reduction

If at least half of the equivalent length of the vent system is vertical, the vent pipe diameter may be reduced one inch from the standard diameter listed in Vent Length Table 1. ***Only*** single-wall pipe is suitable for use when reducing the pipe diameter. A taper-type reducer must be used. The maximum allowable vent length remains the same. If required, double-wall pipe may be used at the terminal end as shown in Figures 9 and 10. (Use the equivalent length for elbows as shown in Vent Length Table 1 for the standard vent pipe diameter. *All* elbows used in the vent system must be considered.)

3. Vent Length Tables

Table 1: Maximum Permissible Vent Lengths

Model	Vent Pipe Diameter	Maximum Vent Length* ft (M)	Equivalent Straight Length** - ft (M)	
			90° Elbows	45° Elbows
25	4"	30 ft (9.1 M)	3.5' (1 M)	1.8' (.5 M)
50	4"	40 ft (12.2 M)	5' (1.5 M)	2.5' (.8 M)
75	4"	50 ft (15.2 M)	7' (2.1 M)	3.5' (1.1 M)
100	4"	50 ft (15.2 M)	7' (2.1 M)	3.5' (1.1 M)
125	5"	50 ft (15.2 M)	5' (1.5 M)	.5' (.8 M)
165	5"	50 ft (15.2 M)	9' (2.7 M)	4.5' (1.4 M)
200	5"	50 ft (15.2 M)	8' (2.4 M)	4.0' (1.2 M)
250	5"	50 ft (15.2 M)	10' (3.0 M)	5' (1.5 M)
300	6"	50 ft (15.2 M)	11' (3.4 M)	5.5' (1.7 M)
400	6"	50 ft (15.2 M)	15' (4.6 M)	7.5' (2.3 M)

Table 2: Optional Maximum Permissible Vent Lengths
(Requires an increase in vent pipe diameter.)

Model	Vent Pipe Diameter	Maximum Vent Length* ft (M)	Equivalent Straight Length** - ft (M)	
			90° Elbows	45° Elbows
100	5"	60 ft (18.3 M)	8' (2.4 M)	4.0' (1.2 M)
165	6"	60 ft (18.3 M)	10' (3.0 M)	5.0' (1.5 M)
200	6"	60 ft (18.3 M)	12' (3.7 M)	6.0' (1.8 M)
250	6"	70 ft (21.3 M)	8' (2.4 M)	4.0' (1.2 M)
300	7"	70 ft (21.3 M)	13' (4.0M)	6.5' (2.0 M)
400	7"	90 ft (27.4 M)	14' (4.3M)	7.0' (2.1M)

***Note 1**: If the system contains all vertical pipe or a combination of horizontal and vertical vent pipe, the Maximum Permissible Vent Length shown in Tables 1 and 2 may be increased one foot for each foot vertical rise up to a maximum increase of 10 feet for Model sizes 25 thru 100 and up to 20 feet for Model sizes 125 thru 400.

******Reduce the maximum vent length by the amount indicated for *each* elbow.

4. Vent System Joints

Vent system joints depend on the installation and the type of pipe being used.

- If using single wall, 26-gauge or heavier galvanized pipe, secure slip-fit connections using sheet metal screws or rivets. Seal pipe joints either with tape suitable for 550°F (such as Option FA1, P/N 98266) or high-temperature silicone sealant.
- If using Category III vent pipe, follow pipe manufacturer's instructions for joining pipe sections. When attaching Category III pipe to the venter outlet or the vent cap, make secure, sealed joints following a procedure that best suits the style of Category III pipe being used.
- If using double-wall (Type B) vent pipe (allowed only if 1/2 of the equivalent vent length is vertical), follow pipe manufacturer's instructions for joining pipe sections. For joining double-wall pipe to the venter outlet collar, single-wall pipe, and/or the vent cap, follow the instructions below.

Instructions for attaching double-wall (Type B) vent pipe to the venter outlet, a single-wall pipe run, or to the vent cap (use these instructions for either full length double-wall or terminal only):

Hardware and Sealant Required: 3/4" long sheetmetal screws; and a tube of silicone sealant

1) Look for the "flow" arrow on the vent pipe; attach according to the arrow. Slide the pipe so that the venter outlet, the single-wall pipe, or the vent cap is inside the double-wall pipe.

2) Drill a hole through the pipe into the outlet collar, the single-wall pipe, or the vent cap. (Hole should be slightly smaller than the sheet metal screw being used.) Using a 3/4" long sheet metal screw, attach the pipe. Do not overtighten. Repeat, drilling and inserting two additional screws evenly spaced (120° a part) around the pipe.

3) Use silicone sealant to seal any gaps. If there is an annular opening, run a large bead of sealant in the opening. The bead of sealant must be large enough to seal the opening, but it is not necessary to fill the full volume of the annular area.

5. Vent System Support

Support lateral runs every six feet, using a non-combustible material such as strap steel or chain. Do not rely on the heater for support of either horizontal or vertical vent pipe

6. Condensation

Single wall vent pipe exposed to cold air or run through unheated areas must be insulated. Where extreme conditions are anticipated, install a means of condensate disposal.

7. Vent Terminal (Pipe and Vent Cap)

The vent system must be terminated with a suitable vent cap that is the **same size as the vent run**.

Heaters must be equipped with the heater manufacturer's vent cap, a Type L Breidert *Air-x-hauster®* vent cap, or equivalent. Use of a vent cap supplied by the pipe manufacturer is not permitted; the vent cap must be the type approved for use with this heater. A different style vent cap could cause nuisance problems or unsafe conditions.

See the illustrations in Figures 9 and 10 for requirements of both vertical and horizontal vent termination. The vent terminal section may be either single-wall or double-wall (Type B) vent pipe. If double-wall pipe is used in the vent terminal with a single-wall vent run, follow the instructions in No. 4, Vent System Joints, to attach the vent cap and to connect the double-wall pipe to the single-wall vent pipe run.

Figure 9 - Horizontal Vent Terminals

Single-Wall Vent Run and Single-Wall Terminal End

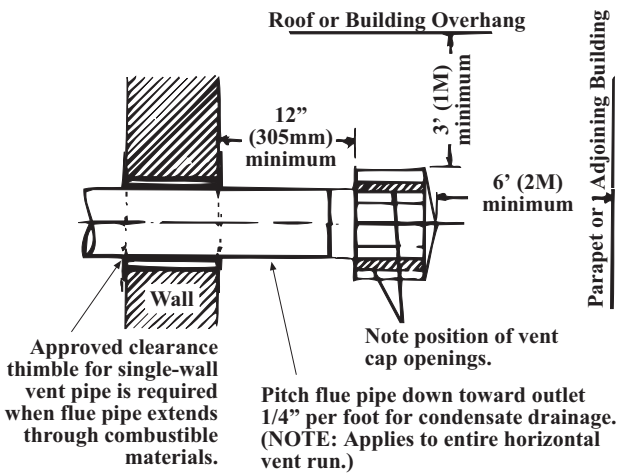

Single-Wall Vent Run and Double-Wall Terminal End

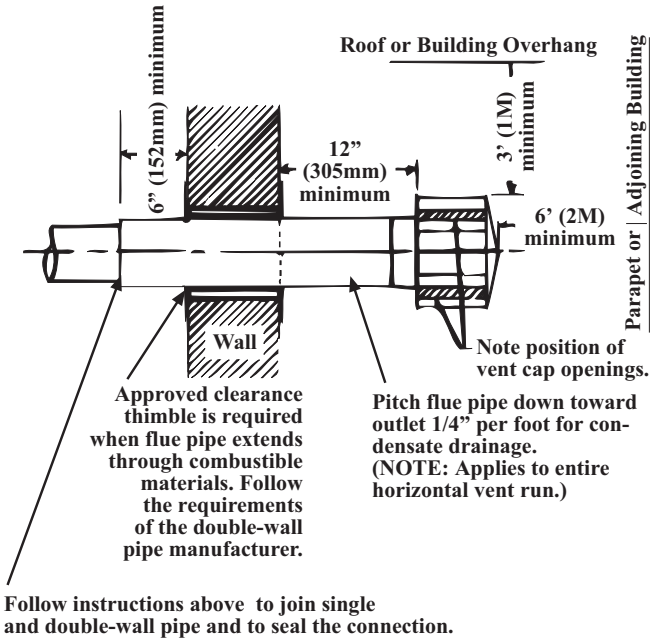

Horizontal Vent Terminal Clearances:

The location of the termination of the horizontal vent system must be in accordance with National Fuel Gas Code Z223.1. Required minimum clearances are listed on the right.

Products of combustion can cause discoloration of some building finishes and deterioration of masonry materials. Applying a clear silicone sealant that is normally used to protect concrete driveways can protect masonry materials. If discoloration is an esthetic problem, relocate the vent or install a vertical vent.

Structure	Minimum Clearances for Vent Termination Location (all directions unless specified)
Forced air inlet within 10 ft (3.1m)	3 ft (0.9m) above
Combustion air inlet of another appliance	6 ft (1.8m)
Door, window, or gravity air inlet (any building opening)	4 ft (1.2m) horizontally
	4 ft (1.2m) below
	3 ft (0.9m) above
Electric meter, gas meter * and relief equipment	4 ft (1.2m) horizontally
Gas regulator *	3 ft (0.9m)
Adjoining building or parapet	6 ft (1.8m)
Grade (ground level)	7 ft (2.1m) above

*Do not terminate the vent directly above a gas meter or service regulator.

10. Venting (cont'd)

Figure 10 - Vertical Vent Terminals

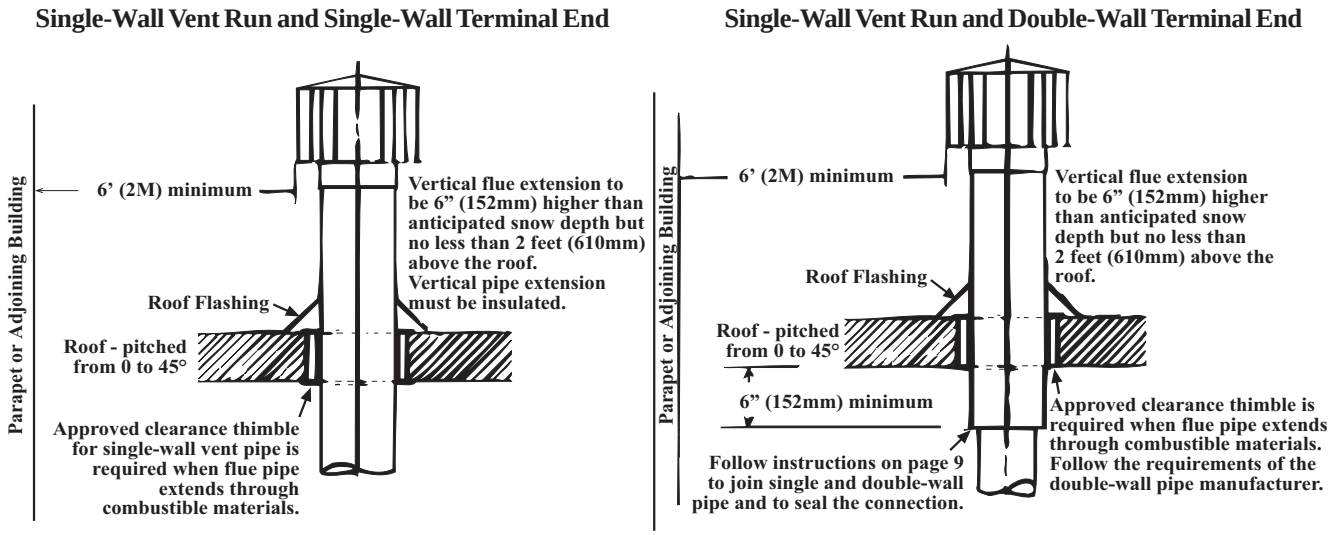

11. Gas Piping and Pressures

WARNING

This appliance is equipped for a maximum gas supply pressure of 1/2 pound, 8 ounces, or 14 inches water column. Supply pressure higher than 1/2 pound requires installation of an additional service regulator external to the unit.

PRESSURE TESTING SUPPLY PIPING

Test Pressures Above 1/2 PSI: **Disconnect the heater and manual valve from the gas supply line which is to be tested. Cap or plug the supply line.**

Test Pressures Below 1/2 PSI: **Before testing, close the manual valve on the heater.**

All piping must be in accordance with requirements outlined in the National Fuel Gas Code ANSI/Z223.1a (latest edition) or CAN/CGA-B149.1 and B149.2 (See Paragraph 1). Gas supply piping installation should conform with good practice and with local codes.

Unit heaters for natural gas are orificed for operation with gas having a heating value of 1000 (+ or - 50) BTUH per cubic ft. If the gas at the installation does not meet this specification, consult the factory for proper orificing.

Pipe joint compounds (pipe dope) shall be resistant to the action of liquefied petroleum gas or any other chemical constituents of the gas being supplied.

Install a ground joint union and manual shut-off valve upstream of the unit control system, as shown in Figure 11. The 1/8" plugged tapping in the shut-off valve provides connection for supply line pressure test gauge. The National Fuel Gas Code requires the installation of a trap with a minimum 3" drip leg. Local codes may require a minimum drip leg longer than 3" (typically 6").

Gas connection sizes are included in the Dimensional Tables in Paragraph 3. After all connections are made, disconnect the pilot supply at the control valve and bleed the system of air. Reconnect the pilot line and leak-test all connections by brushing on a soap solution.

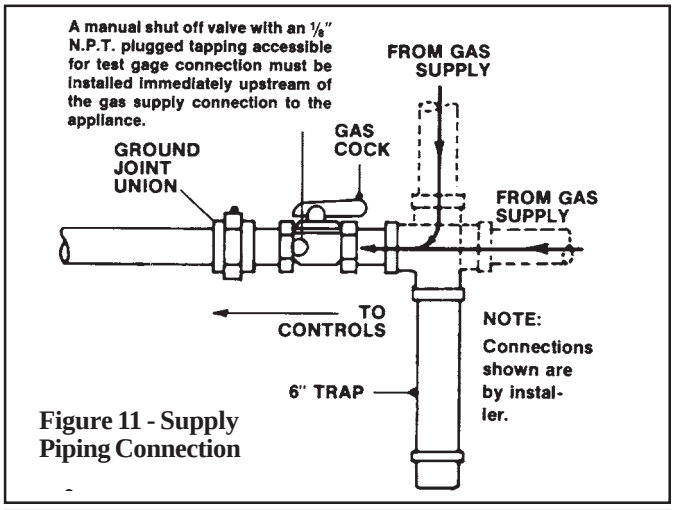

Figure 11 - Supply Piping Connection

WARNING: All components of a gas supply system must be leak tested prior to placing equipment in service. NEVER TEST FOR LEAKS WITH AN OPEN FLAME. Failure to comply could result in personal injury, property damage or death.

Manifold or Orifice Pressure Settings

Measuring manifold gas pressure cannot be done until the heater is in operation. It is included in the steps of the "Check-Test-Start" procedure in Paragraph 25. The following warnings and instructions apply.

WARNING: Manifold gas pressure must never exceed 3.5" w.c. for natural gas and 10" w.c. for propane gas.

For Natural Gas: When the heater leaves the factory, the combination gas valve is set so that the manifold gas pressure is regulated to 3.5" w.c. Inlet supply pressure to the valve for natural gas must be a minimum of 5" w.c. or as noted on the rating plate and a maximum of 14" w.c.

For Propane Gas: When the heater leaves the factory, the combination gas valve is set so that the manifold gas pressure is regulated to 10" w.c.

Sizing a Gas Supply Line

Capacity of Piping Cubic Feet per Hour based on 0.3" w.c. Pressure Drop Specific Gravity for Natural Gas -- 0.6 (Natural Gas -- 1000 BTU/Cubic Ft) Specific Gravity for Propane Gas -- 1.6 (Propane Gas -- 2550 BTU/Cubic Ft)												
Length of Pipe	Diameter of Pipe											
	1/2"		3/4"		1"		1-1/4"		1-1/2"		2"	
	Natural	Propane	Natural	Propane	Natural	Propane	Natural	Propane	Natural	Propane	Natural	Propane
20'	92	56	190	116	350	214	730	445	1100	671	2100	1281
30'	73	45	152	93	285	174	590	360	890	543	1650	1007
40'	63	38	130	79	245	149	500	305	760	464	1450	885
50'	56	34	115	70	215	131	440	268	670	409	1270	775
60'	50	31	105	64	195	119	400	244	610	372	1105	674
70'	46	28	96	59	180	110	370	226	560	342	1050	641
80'	43	26	90	55	170	104	350	214	530	323	990	604
90'	40	24	84	51	160	98	320	195	490	299	930	567
100'	38	23	79	48	150	92	305	186	460	281	870	531
125'	34	21	72	44	130	79	275	168	410	250	780	476
150'	31	19	64	39	120	73	250	153	380	232	710	433
175'	28	17	59	36	110	67	225	137	350	214	650	397
200'	26	16	55	34	100	61	210	128	320	195	610	372
Note: When sizing supply lines, consider possibilities of future expansion and increased requirements. Refer to National Fuel Gas Code for additional information on line sizing.												

Inlet supply pressure to the valve for propane gas must be a minimum of 11" w.c. and a maximum of 14" w.c.

Before attempting to measure or adjust manifold gas pressure, the inlet supply pressure *must* be within the specified range both when the heater is in operation and on standby. Incorrect inlet pressure could cause excessive manifold gas pressure immediately or at some future time. If natural gas supply pressure is too high, install a regulator in the supply line before it reaches the heater. If natural gas supply pressure is too low, contact your gas supplier.

Instructions on How to Check Manifold Pressure (can only be done after heater is installed):

1) With the manual valve positioned to prevent flow to the main burners, connect a manometer to the 1/8" pipe outlet pressure tap in the valve. NOTE: A manometer (fluid-filled gauge) is recommended rather than a spring type gauge due to the difficulty of maintaining calibration of a spring type gauge.

2) Open the valve and operate the heater. Measure the gas pressure to the manifold. Normally adjustments should not be necessary to the factory preset regulator.

If adjustment is necessary, set pressure to correct settings by turning the regulator screw IN (clockwise) to increase pressure. Turn regulator screw OUT (counterclockwise) to decrease pressure.

Derating by Manifold Pressure Adjustment for High Altitude Operation

If the heater is being installed above 2000 ft (610M) and it was determined in Paragraph 5 that derating by manifold pressure adjustment is permissible, follow the instructions below.

Instructions for Derating a Heater by Adjusting Manifold Pressure (The heater *must* have a single-stage gas valve *and must* be factory-equipped for sea level operation.)

1. Check the rating plate to be certain that the heater is equipped for sea level operation. ***Do not attempt to derate by manifold gas pressure adjustment if the heater is factory equipped for high altitude. Do not attempt to adjust manifold pressure on heaters equipped with two stage gas valves.***
2. Determine the required manifold pressure for the elevation where the heater will be operating. If unsure of the elevation, contact the local gas supplier.

Manifold Pressure Settings by Elevation

Altitude Feet	Altitude Meters	Natural Gas (inches W.C.)	Propane Gas (inches W.C.)
0- 2000	1-610	3.5	10.0
2001-3000	911-915	2.8	7.7
3001-4000	916-1220	2.5	7.1
4001-5000	1221-1525	2.3	6.4
5001-6000	1526-1830	2.1	5.8
6001-7000	1831-2135	1.9	5.2
7001-8000	2136-2440	1.7	4.6
8001-9000	2441-2745	1.5	4.1

3. With the manual valve positioned to prevent flow to the main burners, connect a manometer to the 1/8” pipe outlet pressure tap in the valve. Use a fluid-filled manometer that is readable to the nearest tenth of an inch w.c.
4. Remove the cap from the pressure adjusting screw and adjust the manifold pressure to the pressure setting selected from the table. Cycle the main burners once or twice to properly seat the adjustment spring in the valve.

   Re-check the pressure. If necessary, re-adjust the pressure. When the pressure is correct, remove the manometer and replace the cap. Check for leaks at the pressure tap fitting.
5. With the heater operating determine that the inlet pressure to the heater for natural gas is between 5 and 14 inches w.c. and for propane between 10 and 14 inches w.c. Take this reading as close as possible to heater (Most heaters are now equipped with gas valves that have an inlet pressure tap.) ***If the inlet pressure is not within the specified range, the inlet pressure must be corrected and Steps 3 and 4 repeated.***
6. If altitude is above 6000 ft (1830M), verify that the pressure switch has been changed.

High Altitude Combustion Air Pressure Switch

P/N	Description
159180	#PPS10027-2733

7. Find the Manifold Pressure Adjustment label in the plastic bag that contained these instructions. Using a permanent marker, fill-in the pressure setting. Adhere the label on the heater near the gas valve so that it is conspicuous to someone servicing the valve and /or heater.

12. Electrical Supply and Connections

All electrical wiring and connections, including electrical grounding MUST be made in accordance with the National Electric Code ANSI/NFPA No. 70 (latest edition) or, in Canada, the Canadian Electrical Code, Part I-C.S.A. Standard C22.1. In addition, the installer should be aware of any local ordinances or gas company requirements that might apply.

Check the rating plate on the heater for the supply voltage and current requirements. A separate line voltage supply with fused disconnect switch should be run directly from the main electrical panel to the heater. All external wiring must be within approved conduit and have a minimum temperature rise of 60°C. Conduit from the disconnect switch must be run so as not to interfere with the service panels of the heater.

The electrical supply connects at the top back of the heater in the left corner (left when facing the back of the heater). A threaded hole is provided for a standard 1/2" electrical fitting.

The wiring access panel is easily removed for field connections. Consult the wiring diagram supplied with your heater. Replace the panel after the wiring connections are made.

If the heater has field-installed options that require electrical connections, consult the instruction sheet and wiring diagram supplied in the option package.

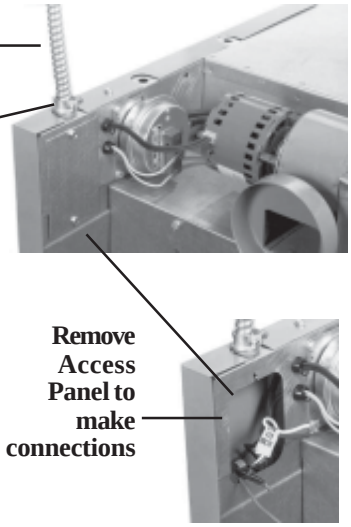

Note: Fan-type heaters with optional built-in disconnect switch, have an on/off switch located near the electrical supply access panel.

Figure 12 - Electrical Connections

Figure 13 - Optional Unit-Mounted Disconnect

A fan-type heater may be equipped with a built-in fused disconnect switch (Option AI-1). If the heater is equipped with a built-in disconnect switch, a two-position toggle (on/off) switch is located near the electrical supply access panel (See Figures 12 and 13).

This switch may be used to disconnect the power when servicing the heater **other than in the supply junction box**.

Specific wiring diagrams that include standard and factory-installed options are included with the heater. Check the wiring diagram to identify optional equipment.

WARNINGS: On a heater with a unit disconnect switch (Option AI-1), if the power is turned off at the switch, the supply lead in the electrical supply junction box (Figure 12) remains energized. If service is to be done in the supply junction box, turn off the power at the remote disconnect switch.

If you turn off the power supply, turn off the gas.

The operating sequence of the heater can be found on the heater wiring diagram and is published in Paragraph 25, Check Installation and Start-Up. **Typical wiring diagrams are on the next four pages,** showing standard single-stage heating with spark pilot with and without lock-out.

CAUTION: If any of the original wire as supplied with the appliance must be replaced, it must be replaced with wiring material having a temperature rating of at least 105°C, except for limit control and sensor lead wires which must be 150°C. See Hazard Levels, page 2.

13. Thermostat and Thermostat Connections

A thermostat is not standard equipment but is an installation requirement. Use either an optional thermostat available with the heater or a field-supplied thermostat. Install according to the thermostat manufacturer's instructions. Make sure that the heat anticipator setting on the thermostat is in accordance with the amperage value noted on the wiring diagram of your heater.

Terminal Strip Connections - The standard heater is equipped with a two-screw terminal connector strip (See Figure 14) for easy connection to the low voltage controls (24V). When factory-installed options require two-stage thermostat control, the heater is equipped with a SP-ST relay and a four-screw terminal connector strip (See Figure 15).

If your heater requires field installation of the four-screw terminal strip and the relay, follow the instructions packaged with the relay or thermostat option.

Figure 14 - Two Screw Terminal Connector Strip

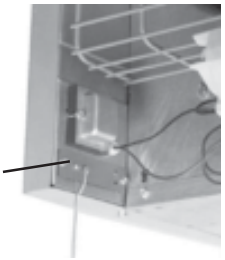

Figure 15 - Four Screw Terminal Connector Strip

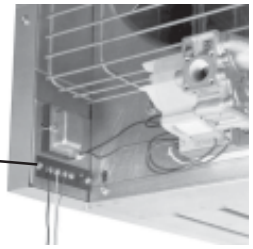

(Paragraph 13 continued on page 17.)

TYPICAL WIRING DIAGRAMS -- Pages 13 - 16

Field Control Wiring Length and Gauge		
Total Wire Length	Distance from Unit to Control	MinimumRecommended Wire Gauge
150' (45.7 m)	75' (22.9 m)	#18 gauge
250' (76.2 m)	125' (38.1 m)	#16 gauge
350' (106.7 m)	175' (53.3 m)	#14 gauge

CAUTION: If any of the original wire as supplied with the appliance must be replaced, it must be replaced with wiring material having a temperature rating of at least 105°C, except for limit control and sensor lead wires which must be 150°C. See Hazard Levels, page 2.

Fan-Type, Power-Vented Model with Intermittent Spark Pilot, Single-Stage Heating, Natural or Propane

OPERATING SEQUENCE

1. SET THERMOSTAT AT LOWEST SETTING.
2. TURN ON MAIN AND PLOT MANUAL GAS VALVES.
3. TURN ON POWER TO UNIT.
4. SET THERMOSTAT AT DESIRED SETTING.
5. THERMOSTAT CALLS FOR HEAT ENERGIZING THE VENTER MOTOR.
6. VENTER PRESSURE SWITCH CLOSES FIRING UNIT AT FULL RATE AFTER PILOT PROVING SEQUENCE.
7. FAN CONTROL SENSES HEAT EXCHANGER TEMPERATURE, ENERGIZING THE FAN MOTOR.
8. IF THE FLAME IS EXTINGUISHED DURING MAIN BURNER OPERATION THE SAFETY SWITCH CLOSES THE MAIN VALVE AND RECYCLES THE SPARK GAP. ON UNITS EQUIPPED WITH THE G77ONGC-4 LOCKOUT CONTROL, IF PILOT IS NOT ESTABLISHED WITHIN 120 SECONDS (APPROX.) UNIT LOCKS OUT AND THE UNIT MUST BE RESET BY INTERRUPTING POWER TO CONTROL CIRCUIT (SEE LIGHTING INSTRUCTIONS).

NOTES

1. THE FOLLOWING CONTROLS ARE FIELD INSTALLED OPTIONS: THERMOSTAT
2. THE FOLLOWING CONTROLS ARE FACTORY INSTALLED OPTIONS: S/W SWITCH
3. DOTTED WIRING INSTALLED BY OTHERS.
4. CAUTION: IF ANY OF THE ORIGINAL WIRING AS SUPPLIED WITH THE APPLIANCE MUST BE REPLACED, IT MUST BE REPLACED WITH WIRING MATERIAL HAVING A TEMPERATURE RATING OF AT LEAST 105 DEGREES C., EXCEPT FOR SENSOR LEAD AND LIMIT WIRING WHICH MUST BE 150 DEGREES C.
5. USE #18 GA WIRE FOR ALL WIRING EXCEPT FAN MOTOR CIRCUIT.
6. LINE AND FAN MOTOR BRANCH WIRE SIZES SHOULD BE OF A SIZE TO PREVENT VOLTAGE DROPS BEYOND 5% OF SUPPLY LINE VOLTAGE.
7. ON 230V. UNITS THE CONTROL TRANSFORMER HAS A DUAL VOLTAGE PRIMARY.
FOR 230V. UNITS USE BLACK AND YELLOW LEADS (CAP RED).
FOR 208V. UNITS USE BLACK AND RED LEADS (CAP YELLOW).
ON 115V. UNITS THE CONTROL TRANSFORMER IS A SINGLE VOLTAGE PRIMARY.
FOR 115V. UNITS USE BLACK AND YELLOW LEADS.
8. SEE INSTALLATION INSTRUCTIONS FOR GREATER DETAIL.

WIRING CODE
BLACK - BK
BROWN - BR
RED - R
ORANGE - O
YELLOW - Y
GREEN - G
BLUE - BL
PURPLE - PR
WHITE - W

FACTORY WIRING
FIELD WIRING
OPTIONAL FACTORY WIRING
WIRE NUT
CRIMP TERMINAL

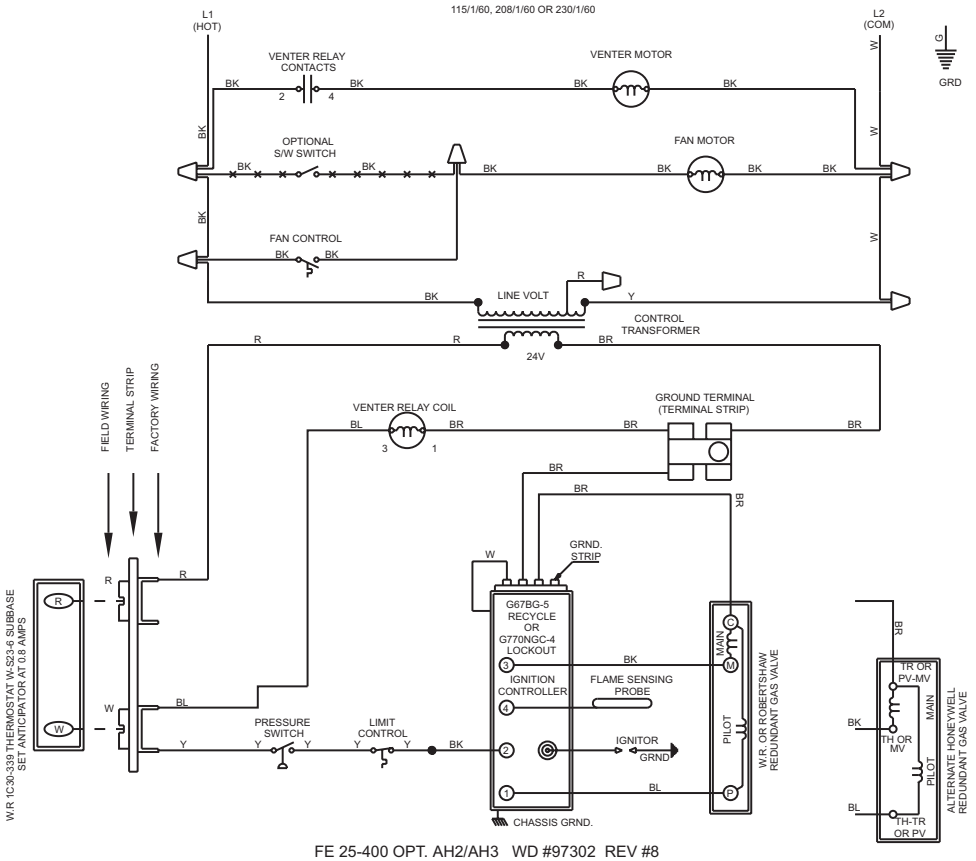

FE 25-400 OPT. AH2/AH3 WD #97302 REV #8

Blower-Type, Power-Vented Model Sizes 25-100 with Intermittent Spark Pilot, Single-Stage Heating, Natural or Propane, Direct Drive

OPERATING SEQUENCE

1. SET THERMOSTAT AT LOWEST SETTING.
2. TURN ON MAIN AND PILOT MANUAL GAS VALVES.
3. TURN ON POWER TO UNIT.
4. SET THERMOSTAT AT DESIRED SETTING.
5. THERMOSTAT CALLS FOR HEAT ENERGIZING THE VENTER MOTOR.
6. VENTER PRESSURE SWITCH CLOSES FIRING UNIT AT FULL RATE AFTER PILOT PROVING SEQUENCE.
7. FAN CONTROL SENSES HEAT EXCHANGER TEMPERATURE, ENERGIZING THE BLOWER MOTOR.
8. IF THE FLAME IS EXTINGUISHED DURING MAIN BURNER OPERATION THE SAFETY SWITCH CLOSES THE MAIN VALVE AND RECYCLES THE SPARK GAP. ON UNITS EQUIPPED WITH THE G77ONGC-4 LOCKOUT CONTROL, IF PILOT IS NOT ESTABLISHED WITHIN 120 SECONDS (APPROX.) UNIT LOCKS OUT AND THE UNIT MUST BE RESET BY INTERRUPTING POWER TO CONTROL CIRCUIT (SEE LIGHTING INSTRUCTIONS).

NOTES
1. THE FOLLOWING CONTROLS ARE FIELD INSTALLED OPTIONS: THERMOSTAT
2. THE FOLLOWING CONTROLS ARE FACTORY INSTALLED OPTIONS: S/W SWITCH AND S/W RELAY
3. DOTTED WIRING INSTALLED BY OTHERS.
4. CAUTION: IF ANY OF THE ORIGINAL WIRING AS SUPPLIED WITH THE APPLIANCE MUST BE REPLACED, IT MUST BE REPLACED WITH WIRING MATERIAL HAVING A TEMPERATURE RATING OF AT LEAST 105 DEGREES C., EXCEPT FOR SENSOR LEAD AND LIMIT WIRING WHICH MUST BE 150 DEGREES C.
5. USE #14 GA WIRE FOR BLOWER MOTOR CIRCUIT WIRING ON UNIT.
6. USE #18 GA WIRE FOR ALL WIRING EXCEPT BLOWER MOTOR CIRCUIT.
7. LINE AND BLOWER MOTOR BRANCH WIRE SIZES SHOULD BE OF A SIZE TO PREVENT VOLTAGE DROPS BEYOND 5% OF SUPPLY LINE VOLTAGE.
8. THREE SPEED MOTOR CONNECTIONS ARE AS FOLLOWS:
B 100-75 USE BLACK MOTOR LEAD, CAP BLUE AND RED, OR USE BLUE MOTOR LEAD, CAP BLACK AND RED, OR USE RED MOTOR LEAD, CAP BLACK AND BLUE
B 50 USE BLACK MOTOR LEAD, CAP BLUE AND RED, OR USE BLUE MOTOR LEAD, CAP BLACK AND RED
B 25 USE BLUE MOTOR LEAD, CAP BLACK AND RED, OR USE BLUE MOTOR LEAD, CAP BLACK AND RED
9. SEE INSTALLATION INSTRUCTIONS FOR GREATER DETAIL.

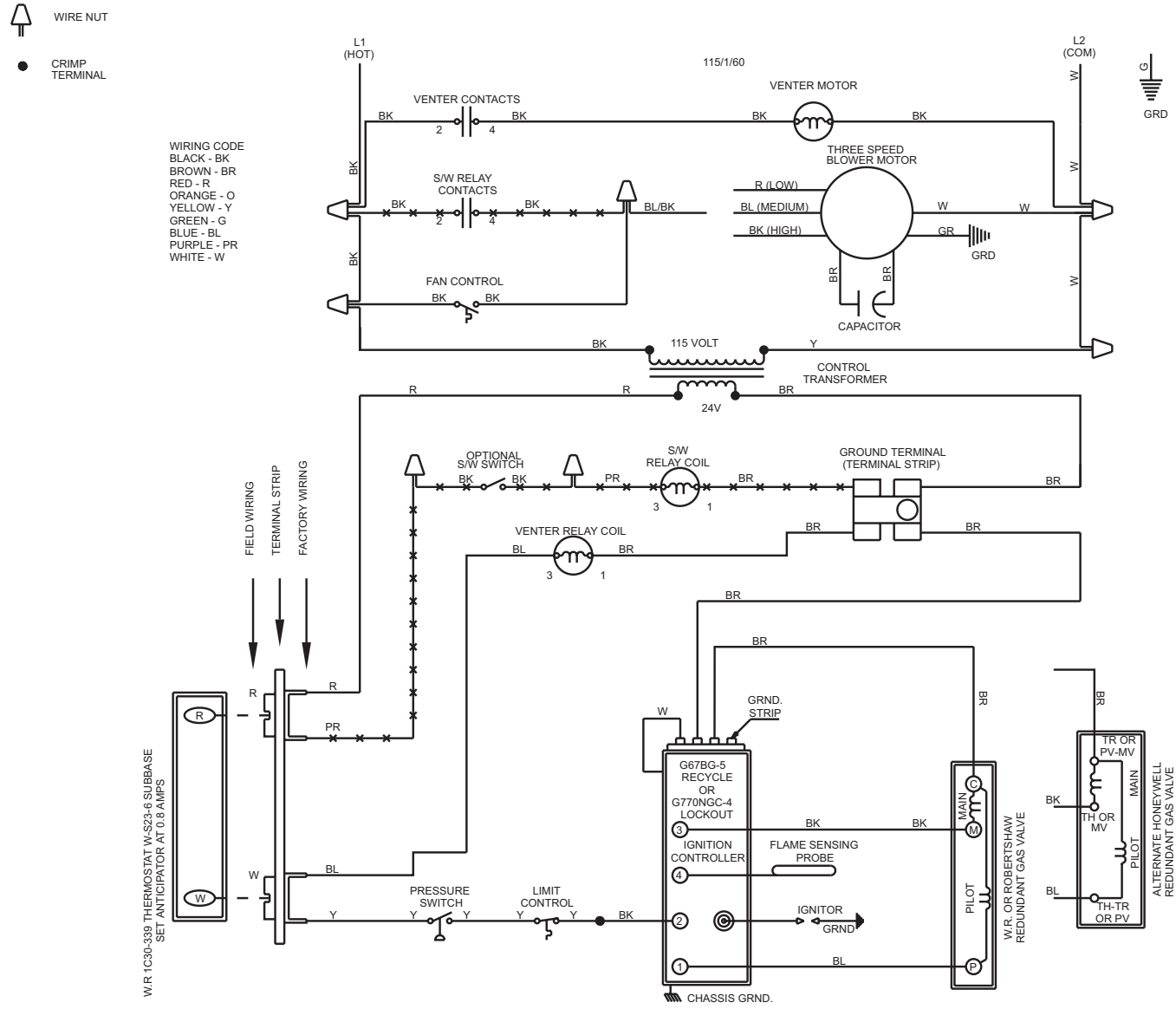

BE 25-100 (DIRECT DRIVE) WD# 100565 REV#4

Model Size	25		50		75			100		
Speed	*Medium	Low	*High	Medium	High	*Medium	Low	*High	Medium	Low
Use these Two Motor Wires	*Blue and White	Red and White	*Black and White	Blue and White	Black and White	*Blue and White	Red and White	*Black and White	Blue and White	Red and White
*Factory-wired speed										

Blower-Type, Power-Vented Model Sizes 50-250 with Intermittent Spark Pilot, Single-Stage Heating, Natural or Propane, Belt Drive (NOTE: Belt drive is standard on Sizes 125-250; optional on Sizes 50-100.)

OPERATING SEQUENCE

1. SET THERMOSTAT AT LOWEST SETTING.
2. TURN ON MAIN AND PLOT MANUAL GAS VALVES.
3. TURN ON POWER TO UNIT.
4. SET THERMOSTAT AT DESIRED SETTING.
5. THERMOSTAT CALLS FOR HEAT ENERGIZING THE VENTER MOTOR.
6. VENTER PRESSURE SWITCH CLOSES FIRING UNIT AT FULL RATE AFTER PILOT PROVING SEQUENCE.
7. FAN CONTROL SENSES HEAT EXCHANGER TEMPERATURE, ENERGIZING THE BLOWER MOTOR.
8. IF THE FLAME IS EXTINGUISHED DURING MAIN BURNER OPERATION THE SAFETY SWITCH CLOSES THE MAIN VALVE AND RECYCLES THE SPARK GAP. ON UNITS EQUIPPED WITH THE G770NGC-4 LOCKOUT CONTROL, IF PILOT IS NOT ESTABLISHED WITHIN 120 SECONDS (APPROX.) UNIT LOCKS OUT AND THE UNIT MUST BE RESET BY INTERRUPTING POWER TO CONTROL CIRCUIT (SEE LIGHTING INSTRUCTIONS).

NOTES
1. THE FOLLOWING CONTROLS ARE FIELD INSTALLED OPTIONS: THERMOSTAT
2. THE FOLLOWING CONTROLS ARE FACTORY INSTALLED OPTIONS: S/W SWITCH AND S/W RELAY
3. DOTTED WIRING INSTALLED BY OTHERS.
4. CAUTION: IF ANY OF THE ORIGINAL WIRING AS SUPPLIED WITH THE APPLIANCE MUST BE REPLACED, IT MUST BE REPLACED WITH WIRING MATERIAL HAVING A TEMPERATURE RATING OF AT LEAST 105 DEGREES C., EXCEPT FOR SENSOR LEAD AND LIMIT WIRING WHICH MUST BE 150 DEGREES C.
5. USE #14 GA WIRE FOR BLOWER MOTOR CIRCUIT WIRING ON UNIT.
6. USE #18 GA WIRE FOR ALL WIRING EXCEPT BLOWER MOTOR CIRCUIT.
7. LINE AND BLOWER MOTOR BRANCH WIRE SIZES SHOULD BE OF A SIZE TO PREVENT VOLTAGE DROPS BEYOND 5% OF SUPPLY LINE VOLTAGE.
8. ON 208/230V. UNITS THE CONTROL TRANSFORMER HAS A DUAL VOLTAGE PRIMARY.
FOR 230V. UNITS USE BLACK AND YELLOW LEADS (CAP RED).
FOR 208V. UNITS USE BLACK AND RED LEADS (CAP YELLOW).
ON 115V. UNITS THE CONTROL TRANSFORMER IS SINGLE VOLTAGE PRIMARY.
FOR 115V. UNITS US BLACK AND YELLOW LEADS.
9. SEE INSTALLATION INSTRUCTIONS FOR GREATER DETAIL.

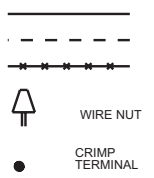

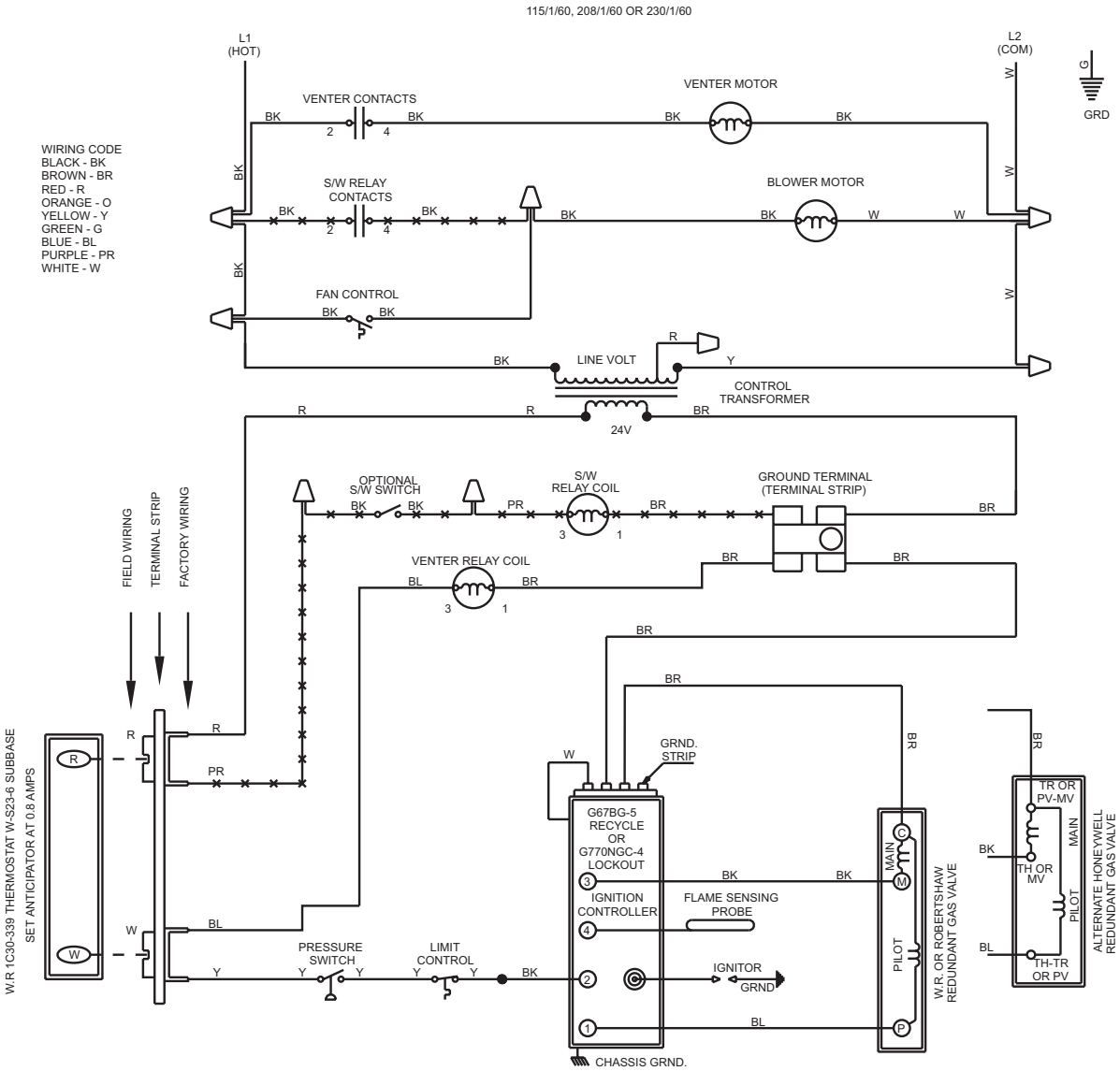

BE 50-250 (BELT DRIVE) WD# 100566 REV #4

Blower-Type, Power-Vented Model Sizes 165-400 with Intermittent Spark Pilot, Single-stage Heating, Natural or Propane, Belt Drive, Motor Contactor (NOTE: Motor contactor is standard on Sizes 300 and 400; optional on other sizes.

OPERATING SEQUENCE

1. SET THERMOSTAT AT LOWEST SETTING.
2. TURN ON MAIN AND PLOT MANUAL GAS VALVES.
3. TURN ON POWER TO UNIT.
4. SET THERMOSTAT AT DESIRED SETTING.
5. THERMOSTAT CALLS FOR HEAT ENERGIZING THE VENTER MOTOR.
6. VENTER PRESSURE SWITCH CLOSES FIRING UNIT AT FULL RATE AFTER PILOT PROVING SEQUENCE.
7. FAN CONTROL SENSES HEAT EXCHANGER TEMPERATURE, ENERGIZING THE BLOWER MOTOR.
8. IF THE FLAME IS EXTINGUISHED DURING MAIN BURNER OPERATION THE SAFETY SWITCH CLOSES THE MAIN VALVE AND RECYCLES THE SPARK GAP. ON UNITS EQUIPPED WITH THE G77ONGC-4 LOCKOUT CONTROL, IF PILOT IS NOT ESTABLISHED WITHIN 120 SECONDS (APPROX.) UNIT LOCKS OUT AND THE UNIT MUST BE RESET BY INTERRUPTING POWER TO CONTROL CIRCUIT (SEE LIGHTING INSTRUCTIONS).

NOTES
1. THE FOLLOWING CONTROLS ARE FIELD INSTALLED OPTIONS:
THERMOSTAT
2. THE FOLLOWING CONTROLS ARE FACTORY INSTALLED OPTIONS:
S/W SWITCH AND S/W RELAY
3. DOTTED WIRING INSTALLED BY OTHERS.
4. CAUTION: IF ANY OF THE ORIGINAL WIRING AS SUPPLIED WITH THE APPLIANCE MUST BE REPLACED, IT MUST BE REPLACED WITH WIRING MATERIAL HAVING A TEMPERATURE RATING OF AT LEAST 105 DEGREES C., EXCEPT FOR SENSOR LEAD AND LIMIT WIRING WHICH MUST BE 150 DEGREES C.
5. USE #14 GA WIRE FOR BLOWER MOTOR CIRCUIT WIRING ON UNIT.
6. USE #18 GA WIRE FOR ALL WIRING EXCEPT BLOWER MOTOR CIRCUIT.
7. LINE AND BLOWER MOTOR BRANCH WIRE SIZES SHOULD BE OF A SIZE TO PREVENT VOLTAGE DROPS BEYOND 5% OF SUPPLY LINE VOLTAGE.
8. ON 208/230V. UNITS THE CONTROL TRANSFORMER HAS A DUAL VOLTAGE PRIMARY.
FOR 230V. UNITS USE BLACK AND YELLOW LEADS (CAP RED).
FOR 208V. UNITS USE BLACK AND RED LEADS (CAP YELLOW).
ON 115V. UNITS THE CONTROL TRANSFORMER IS SINGLE VOLTAGE PRIMARY.
FOR 115V. UNITS USE BLACK AND YELLOW LEADS.
9. SEE INSTALLATION INSTRUCTIONS FOR GREATER DETAIL.

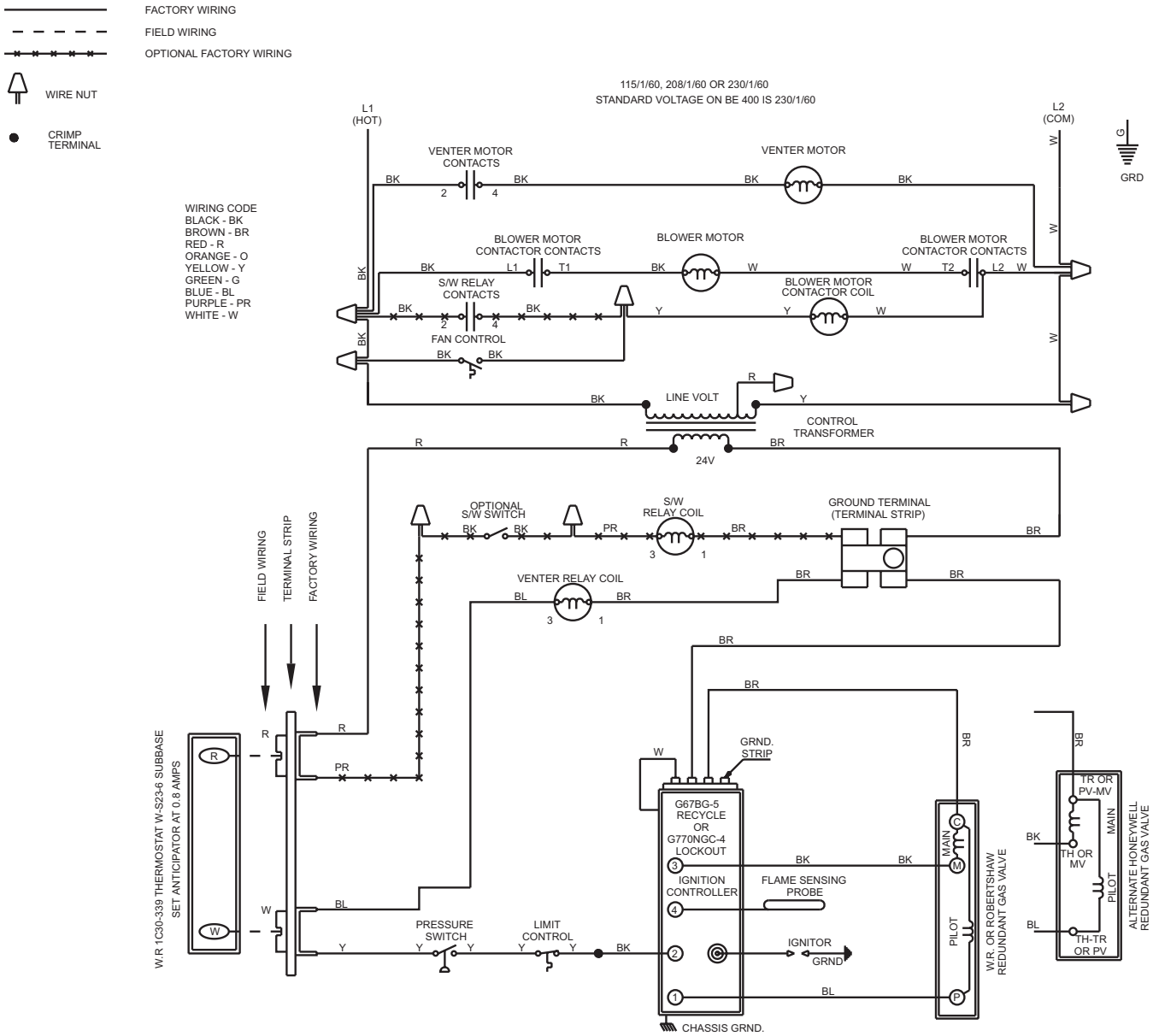

BE 165-400 (BELT DRIVE)-AN2 WD# 100567 REV #4

13. Thermostat Connections (cont'd)

There are some unique wiring requirements with the installation of the optional controls (relay and two-stage). Figure 16 illustrates the wiring of the relay and the connections required for optional thermostat control.

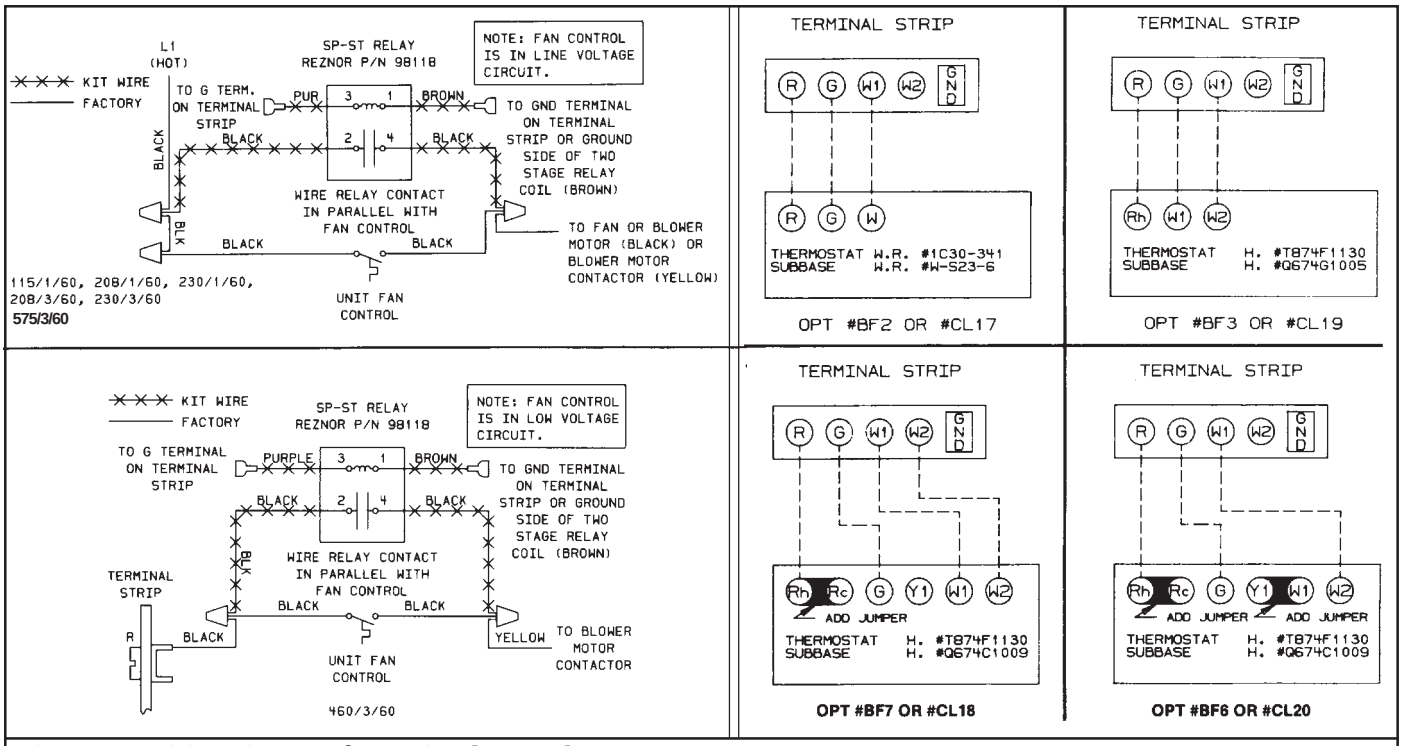

Figure 16 - Wiring Diagrams for Optional Controls

Multiple Heater Control - These unit heaters are not designed for multiple unit connection to one thermostat. If you require that more than one unit be controlled by a single thermostat, it will be necessary to use relays in the circuit. Options CL31 and CL32 provide the necessary parts and instructions for multiple heater control. For more information on these options, see Paragraph 31.

14. Fan Motor

Fan motors are equipped with thermal overload protection of the automatic reset type. Should the motor refuse to run, it may be because of improper current characteristics. Make certain that the correct voltage is available at the motor.

NOTE: If the unit is equipped with an optional totally enclosed motor, the horsepower may be larger than the standard motor. Refer to the motor nameplate to verify horsepower.

15. Blower Motor

Blower Model **Sizes 25-100** are standardly equipped with a direct drive motor; an optional belt drive motor is available on Sizes 50-100. Blower Model **Sizes 125-400** have an adjustable belt drive motor.

As part of the Check/Test/Start (Paragraph 25), check the belt for proper tension. Proper belt tension is important to the long life of the belt and motor. A loose belt will cause wear and slippage. Too much tension will cause excessive motor and blower bearing wear. Adjust the belt tension by turning the adjusting screw on the motor base until the belt can be depressed 1/2-3/4" (13-19mm). (See Figure 17.) After correct tension is achieved, re-tighten the locknut on the adjusting screw.

Most blower motors are equipped with thermal overload protection of the automatic reset type. If a motor is not equipped with thermal overload protection, the unit will be equipped with a starter. The adjustable setting on the starter will be factory set to match the amp draw of the motor and sealed. No change should be made to starter set unless the original motor is replaced.

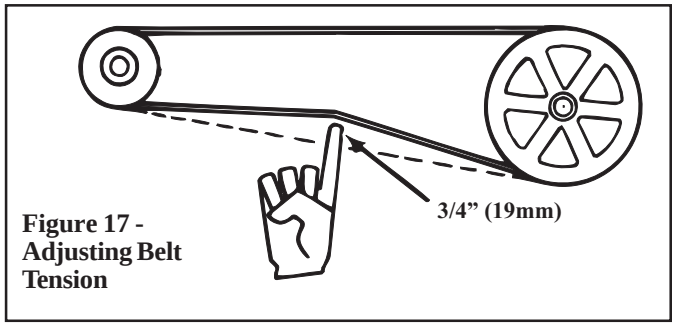

Figure 17 - Adjusting Belt Tension

Starters are supplied from the factory for manual reset operation. If an overload condition is experienced, the condition must be corrected, and the starter must be manually reset.

After the installation is complete including all ductwork, the amp draw of the motor should be checked with an amp meter to verify that the motor amp rating on the motor nameplate is not being exceeded. Amps may be adjusted downward by reducing blower speed for by increasing the duct system static pressure. The temperature rise must be within the range specified on the unit rating plate.

16. Blower Speed Adjustment

The blower speed may be adjusted to achieve the desired outlet temperature, as long as the adjustment is within the temperature rise and the static pressure limits shown on the heater rating plate. **Direct drive motors** are factory set as indicated in the chart below. **Belt drive motors** are factory set at the mid-point between maximum and minimum blower speeds.

If the duct resistance is low, the blower may deliver too high an air volume; or if the heater is operated without ductwork, it may deliver sufficient excess air to overload the motor, causing the overload protector to cycle the motor. Reducing the blower speed will correct these conditions. If ductwork is added to an installation, it may be necessary to increase the blower speed. Decreasing blower speed will increase outlet temperature; increasing blower speed will decrease outlet temperature.

Blower Model Sizes 25-100 with Direct Drive

Direct drive blower motors have multi-speed taps for speed adjustment. If your installation requires an adjustment of the blower speed, the motor may be re-wired to an alternate tap by following these instructions.

1. Turn off the gas and the electric power.
2. Remove the left (left when facing the back of the unit) outer side panel of the heater to reveal the wiring connections.
3. Consult the wiring diagram on the heater and follow the below chart to choose the wire for the desired adjustment. The asterisk(*) indicates the factory-wired speed.

Model Size	Speed	Use these Two Motor Wires
25	*Medium	*Blue and White
	Low	Red and White
50	*High	*Black and White
	Medium	Blue and White
	High	Black and White
75	*Medium	*Blue and White
	Low	Red and White
	*High	*Black and White
100	Medium	Blue and White
	Low	Red and White

4. Cut the crimped cap from the end of the wire that you intend to use and strip the insulation.
5. Disconnect the factory-wired connection and re-wire, using the newly stripped wire.
6. Put a wire nut on the end of the blower motor wire that was disconnected.
7. Replace the heater side panel and turn on the gas and the electric.

Blower Model Sizes 50-400 with Belt Drive

The belt drive on these units is equipped with an adjustable pulley which permits adjustment of the blower speed. Follow these instructions to adjust the blower speed.

1. Turn off the gas and the electric power.
2. Loosen belt tension and remove the belt.
3. Loosen the set screw on the side of the pulley away from the motor.
4. **To increase the blower speed, decreasing outlet temperature**, turn the adjustable half of the pulley inward. **To decrease the blower speed, increasing the outlet temperature**, turn the adjustable half of the pulley outward. One turn of the pulley will change the speed 8-10%.
5. Tighten the set screw on the flat portion of the pulley shaft.
6. Replace the belt and adjust the belt tension. Adjust tension by turning the adjusting screw on the motor base until the belt can be depressed 1/2-3/4" (13-19mm). (See Figure 17.) Re-tighten the lock nut on the adjusting screw.
7. Turn on the gas and electric. Light the heater following the instructions on the lighting instruction plate.
8. Check the motor amps with an amp meter. The maximum motor amp rating on the motor nameplate must not be exceeded.

CAUTION: An external duct system static pressure not within the limits shown on the rating plate or improper adjustment of the motor pulley or belt may overload the motor.

17. Blower Rotation

Each blower housing is marked for proper rotation. Rotation may be changed on single-phase motors by re-wiring in the motor terminal box. Three-phase motors may be reversed by interchanging two wires on the 3-phase supply connections.

18. Fan Control

1. A fan control provides the following:
   (a) Delay of fan or blower operation to prevent the discharge of cold air.
   (b) Fan or blower operation as long as the unit is hot.
2. The fan control provides additional safety by keeping the fan or blower in operation in the event that the gas valve fails to close when the thermostat is satisfied.
3. To be sure that the fan or blower can continue to operate, the power supply to the heater **MUST NOT** be interrupted except when servicing the unit.
4. If the customer wants the heater off at night, the gas valve circuit SHOULD BE OPENED by a single pole switch wired in series with the thermostat. Some thermostats are provided with this feature. Multiple units controlled from a single thermostat are shut off in the same manner. For proper operation, be sure the fan control wiring is observed.

WARNING: If you turn off the power supply, turn off the gas. See Hazard Levels, page 2.

NOTE: Low ambient temperatures (less than 40°F) may cause false cycling of the fan/blower. To prevent this, a time delay relay can be added to the unit (available with single-stage gas valve only) to activate the fan/blower electrically independent of the heat exchanger or the room temperature. The low ambient fan control relay can be factory installed; Option BF8 will appear on the heater wiring diagram. Or, the relay can be field installed; order Option CQ3 (P/N 113779). This relay is in addition to the fan control **The fan control is a safety device and should never be removed from the heater circuit.**

19. Limit Control

All models are equipped with an automatic, non-adjustable reset limit control that acts to interrupt the electric supply to the redundant main operating valve in case of motor failure or lack of airflow due to restrictions at the inlet or outlet.

20. Combustion Air Proving Switch

The combustion air proving switch is a pressure sensitive switch that monitors air pressure to ensure that proper combustion air flow is available. The switch is a single pole - normally open - device which closes when a decreasing pressure is sensed in the outlet duct of the flue gas collection box.

On start-up when the heater is cold, the sensing pressure is at the most negative level, and as the heater and flue system warm up, the sensing pressure becomes less negative. After the system has reached equilibrium (about 20 minutes), the sensing pressure levels off.

If a restriction or excessive flue length or turns cause the sensing pressure to become less than the switch setpoint, the pressure switch will function to shut off the main burners. The main burners will remain off until the system has cooled and/or the flue system resistance is reduced. The Table on the right lists the approximate water column negative pressure readings and switch setpoints for sea level operating conditions.

Model Size	Start-Up Cold	Equilibrium	Set Point "OFF"	Set Point "ON"
25-400	-1.0" w.c.	-0.60" w.c.	-0.47" w.c.	-0.64"w.c.

DANGER: Safe operation of this unit requires proper venting flow. NEVER bypass combustion air proving switch or attempt to operate the unit without the venter running and the proper flow in the vent system. Hazardous conditions could result. See Hazard Levels, page 2.

21. Gas Valve

Main operating valve is powered by the 24-volt control circuit through thermostat and safety controls. The main control valve is of the diaphragm type with magnetic pilot servo bleed operators, providing regulated gas flow preset at the factory. The valve body also incorporates a magnetic valve providing pilot gas control for the electronic ignitor system and redundant or dual valve safety shutoff function.

WARNING: The operating valve is the prime safety shutoff. All gas supply lines must be free of dirt or scale before connecting the unit to ensure positive closure. See Hazard Levels, page 2.

22. Pilot and Ignition System

These unit heaters are equipped with a spark ignited intermittent safety pilot system that shuts off the pilot gas flow between heat cycles. In addition, propane units are equipped with a spark pilot system that incorporates a lockout device that stops the gas flow to the pilot if the pilot fails to light in 120 seconds. The spark pilot with 100% lockout requires manual reset by interruption of the thermostat circuit. Propane units require the lockout; natural gas units may be equipped with either standard spark pilot or spark pilot with lockout (Option AH3). Refer to the wiring diagram with your heater for pilot system identification and proper wiring.

The ignition controller in the spark pilot system provides the high voltage spark to ignite the pilot gas and also acts as the flame safety device. After ignition of the pilot gas, the control electronically senses the pilot flame. (A separate solid metal probe in the pilot burner assembly is employed for the flame sensing function. A low voltage electrical signal is imposed on that metal probe which is electrically isolated from ground. When the pilot flame impinges on the flame sensing probe, the flame acts as a conduction path to ground. The pilot flame rectifies and completes the DC circuit. The ignition controller acknowledges the flame and energizes the main gas valve.)

23. Burners

These unit heaters have individually formed steel burners with accurately die-formed ports to give controlled flame stability without lifting or flashback with either natural or propane gas. The burners are lightweight and factory mounted in an assembly which permits them to be removed as a unit for inspection or service.

24. Burner Air Adjustment

All sizes of these unit heaters that are equipped with standard aluminized burners are designed to operate without burner air shutters when fueled with either natural or propane gas. However, Sizes 165 through 400 equipped with optional stainless steel burners (Option AD2) require air shutters (Option AE1) when used with propane gas (Option AA2).

Optional air shutters, either factory or field installed, are available for any size model for use where unusual conditions cause excess primary aeration.

Before making any adjustments to the air shutters, allow the heater to operate for about fifteen minutes. The air shutter adjustment screws can be reached by opening the bottom panel. (Remove the two screws located at the rear of the bottom panel and allow the panel to hinge down from the front.) The adjustment screws for the air shutters are visible at the rear of the burner rack. See Figure 18.

Figure 18 - Air Shutter Adjustment Screws -- Alternate Turning Screws When Adjusting Shutter

When making the adjustment, close the air shutters no more than is necessary to eliminate the problem condition.

Observe the flame for yellow-tipping. A limited amount of yellow-tipping is permissible for liquefied petroleum gases. Other fuels should not display any yellow-tipping.

Two adjustment screws are used (See Figure 18). Rotating the screws clockwise closes the shutters, reducing the primary air supply. Counterclockwise rotation opens the shutters, increasing the primary air supply. The two adjustment screws should be rotated alternately to open or close the shutters. Attempting to gain adjustment by not alternating between the two screws may cause the shutters to bind.

After proper adjustment has been completed, eliminating the problem condition, close the bottom panel and replace the retaining screws.

DANGER: Failure to install and/or adjust air shutters according to directions could cause property damage, personal injury, and or death.

25. Check Installation and Start-Up

Check the installation prior to start-up:

- ☐ Check suspension. Unit must be secure and level.
- ☐ **Blower Model** - Check to be sure that all shipping supports have been removed. Rubber feet must be on the motor bracket bolts. See Paragraph 3.
- ☐ Check clearances from combustibles. Requirements are shown in Paragraph 7.
- ☐ Check vent system to be sure that it is installed according to the instructions in Paragraph 10.
- ☐ Check piping for leaks and proper gas line pressure. Bleed gas lines of trapped air. See paragraph 11.
- ☐ Check electrical wiring. Be sure all wire gauges are as recommended. A service disconnect switch should be used. Verify that fusing or circuit breakers are adequate for the load use.
- ☐ Check that any field-installed options have been included in the installation.
- ☐ **Blower Model** - Check belt tension. See Paragraph 15.

Start-Up -- Typical Operating Sequence:

1. Set thermostat at lowest setting.
2. Turn on main and pilot manual gas valves.
3. Turn on the power to the unit.
4. Set the thermostat to desired setting.
5. Thermostat calls for heat, energizing the venter motor.
6. Venter pressure switch closes, firing the unit, after pilot proving sequence.
7. Fan control senses heat exchanger temperature, energizing the fan or blower motor.
8. If the flame is extinguished during the main burner operation, the safety switch closes the main valve and recycles the spark gap.
   On units equipped with lockout device, if the pilot is not established within 120 seconds, the unit locks out and must be reset by interrupting power to the control circuit. (See lighting instructions on the heater.)

Check installation after start-up:

- ☐ With the unit in operation, measure manifold gas pressure. See Paragraph 11.
- ☐ Turn the unit off and on, pausing two minutes between each cycle. Observe for smooth ignition.
- ☐ **Blower Model** - Check motor amps with an amp meter. The maximum amp rating on the motor nameplate must not be exceeded.
- ☐ Place 'Owner's Envelope" containing Limited Warranty Card, this booklet, and any optional information in an accessible location near the heater. Follow the instructions on the envelope.

DANGER: The gas burner in this gas-fired equipment is designed and equipped to provide safe and economically controlled complete combustion. However, if the installation does not permit the burner to receive the proper supply of combustion air, complete combustion may not occur. The result is incomplete combustion which produces carbon monoxide, a poisonous gas that can cause death. Safe operation of indirect-fired gas burning equipment requires a properly operating vent system which vents all flue products to the outside atmosphere. FAILURE TO PROVIDE PROPER VENTING WILL RESULT IN A HEALTH HAZARD WHICH COULD CAUSE SERIOUS PERSONAL INJURY OR DEATH.

Always comply with the combustion air requirements in the installation codes and in Paragraphs 7 and 8. Combustion air at the burner should be regulated only by manufacturer-provided equipment. NEVER RESTRICT OR OTHERWISE ALTER THE SUPPLY OF COMBUSTION AIR TO ANY HEATER. Indoor units installed in a confined space must be supplied with air for combustion as required by Code and in Paragraph 8 of this heater installation manual. MAINTAIN THE VENT SYSTEM IN STRUCTURALLY SOUND AND PROPERLY OPERATING CONDITION.

OPTIONAL EQUIPMENT

This section contains a brief description of the more frequently specified field-installed options. All option packages include complete assembly and installation instructions.

26. Optional Vertical Louvers - Option CD1

The purpose of the addition of optional vertical louvers is to increase the air pattern spread. The vertical louver assembly is designed to be field assembled and installed. Refer to the instructions packaged with Option CD1 for a list of components and step-by-step installation instructions (Do not add optional vertical louvers to a fan-type heater with downturn nozzle Option CD3. See Paragraph 27.)

CAUTION: To avoid getting burned, adjust louvers prior to heater operation. If louvers need re-adjusting after start-up, wear protective gloves.

Figure 19 - Optional Vertical Louvers

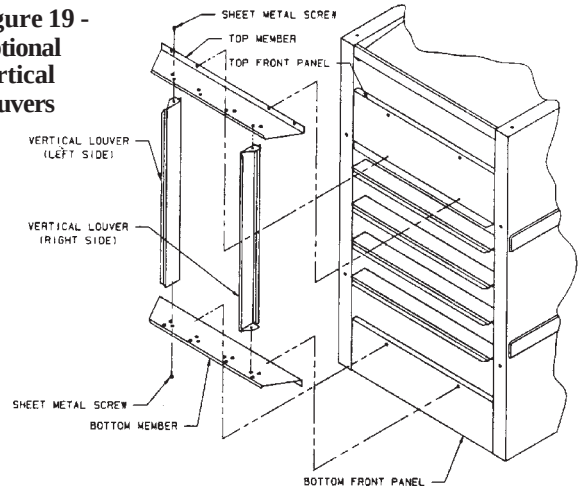

27. Optional Downturn Air Nozzles - Options CD2, CD3, CD4, and CD5

OUTLET NOZZLE OPT. CD2 AND CD4

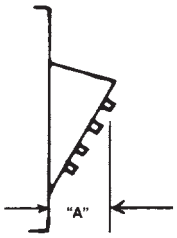

Sizes	"A"	Range of Air Deflection
25-125	9" (229mm)	25°-65°
165-400	13" (330mm)	25°-65°

OUTLET NOZZLE OPT. CD3 AND CD5

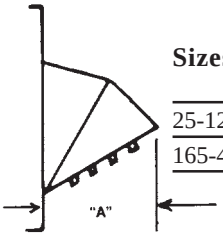

Sizes	"A"	Range of Air Deflection
25-125	16-1/2" (419mm)	50°-90°
165-400	23-1/2" (597mm)	50°-90°

Figure 20 - Optional Downturn Nozzles

Unit heaters may be specified with optional downturn air nozzles to direct the discharge tempered air. The nozzles are shipped separately for field assembly and installation. The horizontal louvers are removed from the heater and re-installed into the outlet of the downturn nozzle.

The addition of a downturn nozzle requires four-point heater suspension. Two hanger brackets are included with downturn nozzle options and must be added to fan-type heaters with standard two-point suspension. Suspension point dimensions are found in Dimension Charts in Paragraph 4. On fan-type heaters, do not install Option CD5 or use vertical louvers with Option CD3.

28. Optional Duct Flange - Option CD9 (Blower Models only)

Blower-type unit heaters may be connected to ductwork. The duct flange option is designed to adapt the heater outlet (supply side) for connection to ductwork.

Ductwork connection sizes are shown in the chart below.

Follow the installation instructions included with the option package.

Model BE Size	Duct Connection Sizes (inches and mm) with Optional Duct Flange							
	25-50	75	100	125	165	200	250-300	400
Height	15-7/8	15-7/8	15-7/8	15-7/8	23-7/8	23-7/8	23-7/8	23-7/8
	403	403	403	403	606	606	606	606
Width	10-3/4	12-3/4	14-3/4	20-1/2	17-1/2	20-1/2	26	34-1/4
	273	324	375	521	445	521	660	870

29. Optional Polytube Adapter - Options CD6, CD8, and CD11 (Blower Models only)

The polytube adapter option is designed to adapt this blower-type heater for use with polytube ductwork. The use of polytubes for air distribution is common in greenhouse applications and some industrial applications. A polytube distribution system delivers warm air to a specific area, reducing the need for complete area heating. The polytube adapter is available in three installation designs making it adaptable to many applications and building structures.

WARNINGS: This adapter is to be used only on units equipped with a blower. At no time should the free area in the polytube be less than the listed minimum. Failure to comply with these warnings could result in severe personal injury, death and/or property damage.

29. Optional Polytube Adapter - Options CD6, CD8, and CD11 (Blower Models only) (cont'd)

The following chart shows specification information covering the use of polytubes with these blower-type unit heaters.

Size	CFM at .25" ESP	Polytube Diameter (inches)	Minimum Free Area (square Inches)	Suggested Hole Sizes and Locations					
				Holes	Length of Polytube				
					50 Ft	75 Ft	100 Ft	125 Ft	150 Ft
75	925	18	110	Number	37pairs	75 pairs	75 pairs		
				Diameter	1-1/2"	1"	1"		
				Spacing	16"	12"	16"		
100	1235	18	145	Number	50 pairs	50 pairs	100 pairs	94 pairs	
				Diameter	1-1/2"	1-1/2"	1"	1"	
				Spacing	12"	18"	12"	16"	
125	1540	18	185	Number	40 pairs	60 pairs	60 pairs	125 pairs	
				Diameter	1-7/8"	1-1/2"	1-1/2"	1"	
				Spacing	15"	15"	20"	12"	
130	1600	24	190	Number	40 pairs	60 pairs	60 pairs	125 pairs	
				Diameter	1-7/8"	1-1/2"	1-1/2"	1"	
				Spacing	15"	15"	20"	12"	
165	2035	24	240	Number	50 pairs	50 pairs	75 pairs	75 pairs	75 pairs
				Diameter	1-7/8"	1-7/8"	1-1/2"	1-1/2"	1-1/2"
				Spacing	12"	18"	16"	20"	24"
200	2465	24	300	Number	42 pairs	42 pairs	60 pairs	60 pairs	100 pairs
				Diameter	2-1/4"	2-1/4"	1-7/8"	1-7/8"	1-1/2"
				Spacing	14"	21"	20"	25"	18"
250	3085	24	360	Number	40 pairs	60 pairs	60 pairs	60 pairs	60 pairs
				Diameter	2-1/2"	2"	2"	2"	2"
				Spacing	15"	15"	20"	25"	30"
300	3700	24	425	Number	75 pairs	75 pairs	75 pairs	75 pairs	75 pairs
				Diameter	2"	2"	2"	2"	2"
				Spacing	9"	12"	16"	20"	24"
400	4935	24	550	Number	60 pairs	60 pairs	60 pairs	100 pairs	100 pairs
				Diameter	2-1/2"	2-1/2"	2-1/2"	1-7/8"	1-7/8"
				Spacing	10"	15"	20"	15"	18"

Conversion Table (Diameter to Area)

Diameter of the Hole (inches)	Area of the Hole (sq in)
2-1/2	4.91
2-1/4	3.98
2	3.14
1-7/8	2.76
1-1/2	1.76
1	0.785

The polytube adapter option package does not include polytubing. Polytubing can be obtained from a supply distributor such as FOF Products, Inc., P. O. Box E, 1505 Racine Street, Delevan, WI 53115; ACME Engineering Co., P.O. Box 978, Muskogee, OK 74402; or any local greenhouse supply distributor. Some local code authorities require the polytube material to be a listed material. Consult code authority having jurisdiction and the polytube supplier to determine the appropriate polytube material and recommended methods of suspension.

Figure 21 - Polytube Adapter

Illustration shows Option CD8, Polytube Adapter for Floor-Mounted Heater. Options CD6 and CD11 are for Suspended Heaters.

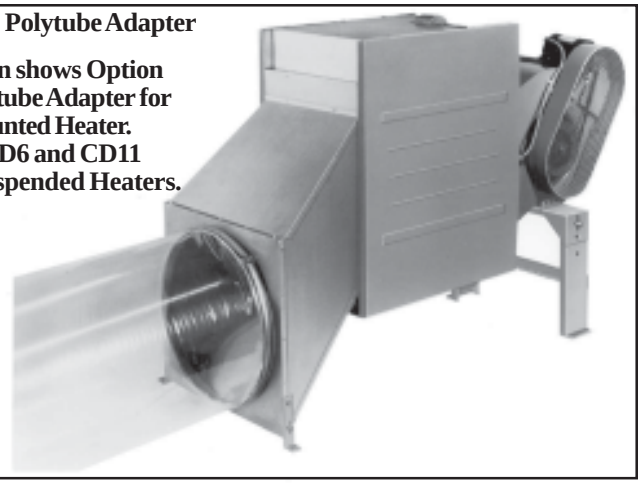

30. Optional Guards - Options CD10 & CD12 (Blower Models only)

These guard options are designed to provide complete protection from the rotating drive and/or blower components. Option CD12 is designed for use with Sizes 25-100 with standard direct drive motor. This kit includes only the blower inlet guard.

Option CD10 is designed for use on Sizes 50-400 with a belt driven motor and includes both the belt guard and the blower inlet guard.

Figure 22 - Optional Guards

Optional Belt Guard Installed

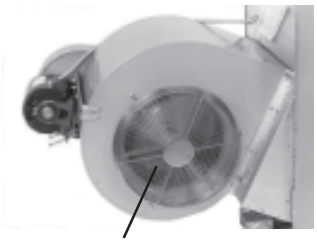

Optional Blower Inlet Guard Installed

31. Optional Blower/Filter Cabinet - Options CW1, CW2, or CW3 (Blower Models Only)

The blower/filter cabinet option is available for all sizes. The blower/filter cabinet is shipped separately for field assembly and installation. The cabinet is adaptable for use with either 1" or 2" filters and may be connected to a return air duct (includes 3/4" duct flange). Option CW1 does not include filters; CW2 includes 1" permanent aluminum filters; and CW3 includes 2" permanent aluminum filters.

Model Size	Qty	Filter Size	Replacement P/N	
			1" Filter	2" Filter
25-125	1	20 x 20	101608	101621
165-200	1	16 x 25	101609	101622
	1	20 x 25	101610	101623
250-300	2	16 x 20	101607	101620
	2	20 x 20	101608	101621
400	2	16 x 25	101609	101622
	2	20 x 25	101610	101623

Figure 23 - Optional Field-Installed Blower/Filter Cabinet

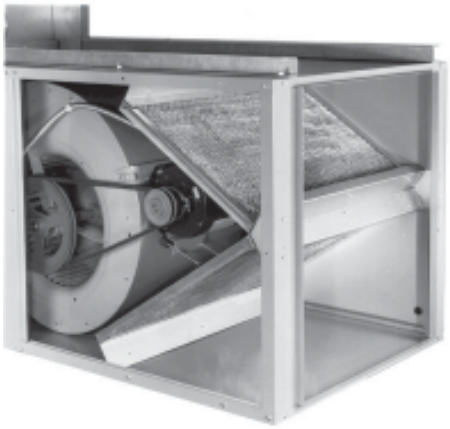

Blower Cabinet with Filters (Option CW2 or CW3) -- side panel removed to illustrate interior of cabinet

Blower Cabinet without Filters (Option CW1)

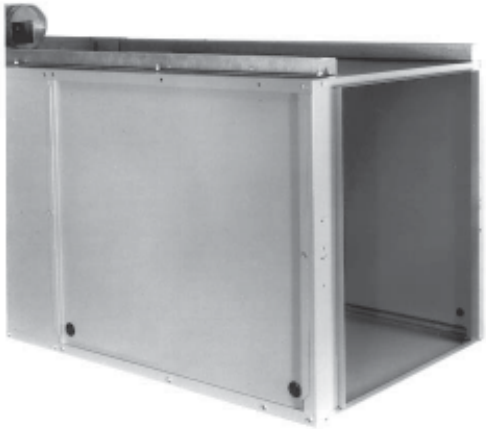

32. Optional Multiple Heater Control - Options CL31 & CL32

The multiple heater control options are designed to permit the control of up to six heaters (one master and five slave units) with a single thermostat or a time clock and single/multiple thermostats.

For maximum safety, the multiple control is one in the low voltage circuit. These multiple heater control options may not be used with two-stage gas valves.

Figure 24 - Multiple Heater Control Wiring with Options CL31 and/or CL32

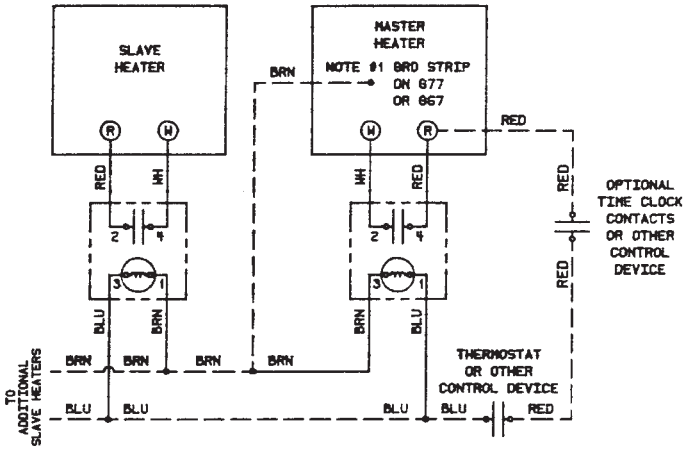

SERVICE AND MAINTENANCE

WARNING: If you turn off the power supply, turn off the gas. See Hazard Levels, page 2.

This unit will operate with a minimum of maintenance. To ensure long life and satisfactory performance, a heater that is operated under normal conditions should be inspected and cleaned at the start of each heating season. If the heater is operating in an area where an unusual amount of dust or soot or other impurities are present in the air, more frequent maintenance is recommended.

The following procedures should be carried out at least annually (See Paragraphs 33-42 for specific instructions.):

1. Clean all dirt and grease from the primary and secondary combustion air openings.
2. **Fan Models -** Clean the fan blade, fan guard, and motor.
3. **Blower Models -** Clean the blower, the belt guard, the inlet guard, and motor of all dirt and grease. Check the blower belt for tension and wear. Replace a worn belt that may fail before the next scheduled maintenance check.
4. Clean the heat exchanger both internally and externally.
5. Check the pilot burner and main burners for scale, dust, or lint accumulation. Clean as needed.
6. Check the vent system for soundness. Replace any parts that do not appear sound.
7. Check the wiring for any damaged wire. Replace damaged wiring. (See Paragraph 12 for replacement wiring requirements.)

NOTE: Use only factory-authorized replacement parts.

33. Burner Rack Removal

These unit heaters have a convenient bottom access panel. The pilot is attainable with the bottom panel open. With the access panel removed, the burner rack assembly will hinge down for removal. Use the following step-by-step instructions for removal of the bottom access panel and the complete burner rack assembly.

Instructions for Burner Rack Removal (See Figures 25-28.)

1. Shut the gas supply off ahead of the combination valve.
2. Turn off electric supply.
3. Remove the two sheet metal screws located at the rear of the bottom panel.
4. Allow bottom panel to hinge down from the front.
5. Push in one of the two spring-loaded hinge pins located at the front of the bottom panel (inside), and completely remove the bottom panel.

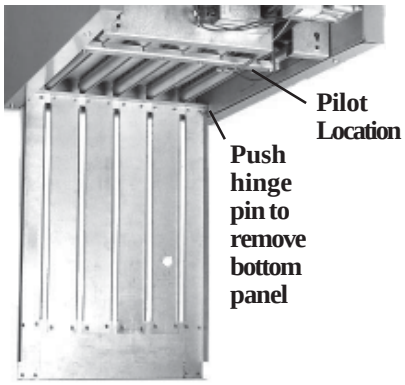

Figure 25 - Bottom Access Panel Open

6. The bottom of the pilot is now visible. Do the following:

(a) Disconnect the pilot tubing from the pilot burner.

(b) Disconnect the flame sensing wire and high tension (spark) lead from the ignition controller.

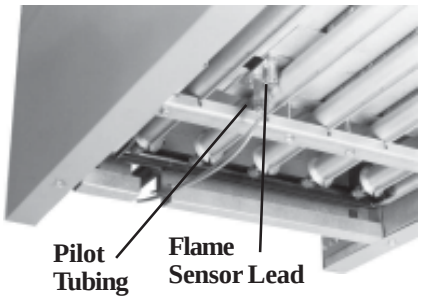

Figure 26 - Spark Pilot Location

7A. **Heaters manufactured beginning 8/91** (Serial No. Date Code AQH) - The burner rack is indexed as illustrated in Figure 27. While supporting the burner rack, remove the screws (two or three) that hold the burner rack support. (For screw location, refer to Figure 27.) Remove the burner rack support allowing the burner rack assembly to swing down (See Figure 28).

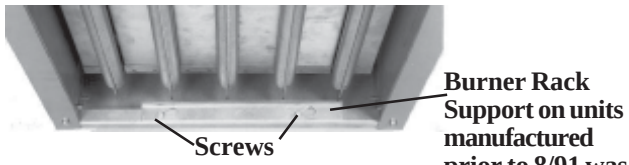

Figure 27 - Burner Rack Support and Retaining Screws

7B. **Heaters manufactured prior to 8/91** (Serial No. Date Code AQH) **Loosen** the sheet metal screws (two or three) located at the front of the burner rack assembly. See Figures 27. These screws retain the burner rack support. While supporting the burner rack assembly, slide the burner rack support and remove it from the screws, allowing the burner rack assembly to swing down (See Figure 28).

8. **To Remove the Burner Rack** -- With the burner rack assembly "hanging" down, lift up on the rear and slide the assembly up and out of the manifold support brackets.

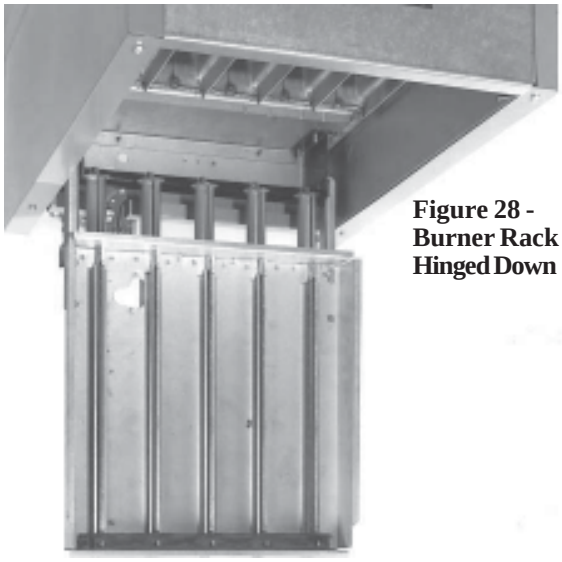

Figure 28 - Burner Rack Hinged Down

Figure 29

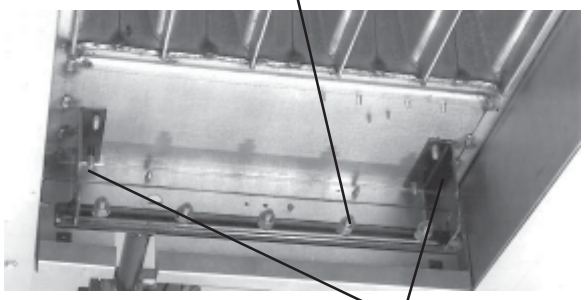

Figure 30 - Burner Rack Completely Removed

9. **To remove the individual burners**:

a. Remove the flash carryover (one screw per burner).

b. With the burner rack upside down, remove the sheet metal screws (located at the rear) that retain the burner holddown.

c. Lift the rear of the burner upward slightly and pull back, removing the individual burners.

d. To replace individual burners, reverse the above procedure.

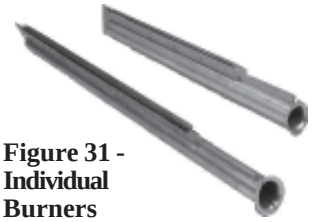

Figure 31 - Individual Burners

10. To replace the burner rack assembly and the bottom panel, reverse the above procedure (Steps 1-8).

Individual burners may be cleaned using air pressure. Use an air nozzle to blow out scale and dust accumulation from the burner ports. Alternately, blow through burner ports and venturi.

CAUTION: Eye protection is recommended.

Use a fine wire to dislodge any stubborn particles. Do not use anything that might change the port size.

When any service is completed, be careful to reassemble correctly to ensure that no unsafe conditions are created. When re-lighting, always follow the lighting instructions on the heater.

34. Pilot and Ignition System

The pilot can be serviced by opening the bottom access panel of the heater. Follow the first four steps of instructions for Burner Rack Removal, Paragraph 33. The pilot can be removed to check the wiring, the spark gap, or to remove the orifice for cleaning. When the pilot is re-installed, be sure to include the pilot hole cover plate.

Spark gap must be maintained to .100". (See Figure 33.)

In the event the pilot flame is short and/or yellow, check the pilot orifice for blockage caused by lint or dust accumulation.

Remove the pilot orifice and clean with air pressure. Check and clean the aeration slot in the pilot burner.

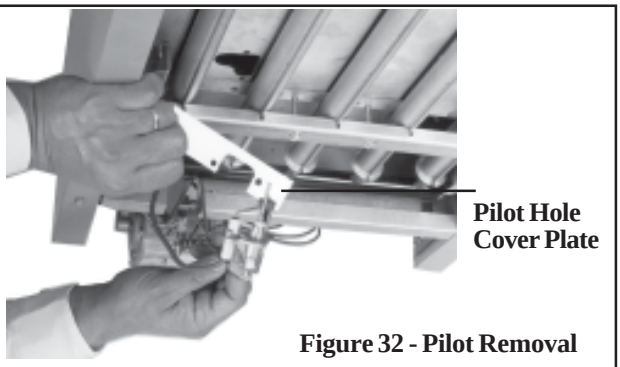

Figure 32 - Pilot Removal

Figure 33 - Pilot Burner Spark Gap

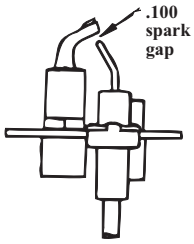

Figure 34 - Pilot Assembly

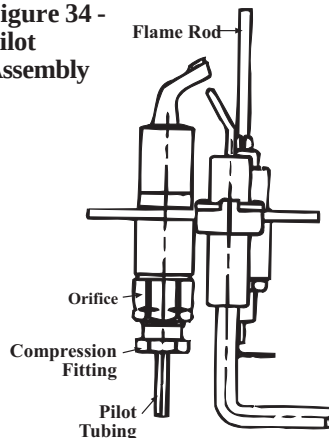

CAUTION: Due to high voltage on pilot spark wire and pilot electrode, do not touch when energized. See Hazard Levels, page 2.

The **ignition controller** of the intermittent electronic ignition pilot system is visibly located on the back of the heater. (See Figure 35.) Do not attempt to disassemble the ignition controller. There are no field replaceable components in the control enclosure. However, each heating season the lead wires should be checked for insulation deterioration and good connections.

Proper operation of the electronic spark ignition system requires a minimum flame signal of .2 microamps as measured by a microampmeter.

For further information and check out procedure on the intermittent electronic ignition pilot system, refer to the manufacturer's control operating instructions supplied with the heater.

Figure 35 - Ignition Controller Location

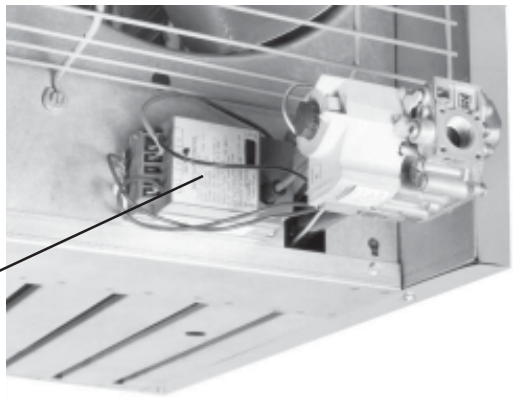

35. Burner Orifices

Heaters are shipped with orifices of proper size and type for gas and altitude specified on the order. When ordering replacement orifices, give BTUH content, specific gravity of gas, and altitude, as well as model and serial number of the heater.

36. Flash Carryover

See Figure 36. The burner carryover system receives its gas supply from the main burner ports. Check the carryover assembly and also the main burner ports for cleanliness. Clean with air pressure.

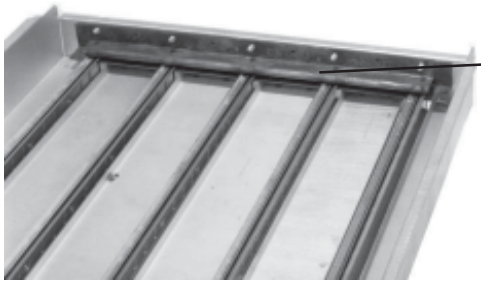

Figure 36 - Burner Rack Flash Carryover

CAUTION: Eye protection is recommended.

37. Heat Exchanger

The outside of the heat exchanger can be cleaned from the front of the heater with an air hose and/or a brush. Remove all accumulated dust and grease deposits.

CAUTION: Eye protection is recommended.

The inner surfaces of the heat exchanger can be reached for cleaning with the burner rack removed. (See Paragraph 33.) Cleaning can be done with a long furnace brush or a heavy wire to which steel wool has been attached. Brush up and down inside each heat exchanger tube until all foreign material is removed. A flashlight is helpful in examining the upper section of the tube.

38. Fan or Blower

Remove dirt and grease from the motor.

On fan model units, remove dirt and grease from the fan guard and blades. Use care when cleaning the fan blades to prevent causing misalignment or imbalance. Check that the hub of the fan blades is secure to the shaft.

38. Fan or Blower (cont'd)

On blower models, remove the grease and dirt from the blower housing and check the belt for wear and proper tension (See Paragraph 15.)

Lubricate if the motor has oil cups or grease fittings. The motor supplied as standard has lifetime lubrication and sleeve bearings.

On blower models, check current draw to motor rating plate.

Fan Models: Follow these instructions for replacement of the fan guard, fan motor or fan blades.

1. If the heater is installed, turn off the gas and disconnect the electric power.

2. Remove the left outer side panel (left when facing the rear of the unit). Disconnect the fan motor wires.

3. Depending on the date that the heater was manufactured, it will have either a lower-half fan guard only, two-piece full fan guard, or a one-piece full fan guard. If the unit has a two piece fan guard, remove the tension mounted upper half fan guard and the four screws that hold the lower half. If the unit has a one-piece fan guard, remove all of the screws that retain the fan guard. Remove the assembled parts (the fan guard, the motor and the fan blade).

4. Disassemble and replace whatever parts are needed and reassemble using whatever part(s) are being replaced and the original parts. If the fan guard is being replaced, it is **important** that the same hardware be used for attaching the motor to the fan guard as was used with the original guard. These screws are especially made to cut through the coating on the fan guard to provide adequate grounding for the motor.

Position the assembly on the heater. Attach the fan guard at the center mounts. (**IMPORTANT**: If replacing the fan guard, use the screws that held the original fan guard. These specially designed screws will cut through the coating on the fan guard to provide a ground for the fan motor.)

Rotate the fan blade to check for adequate clearance. If adjustment is required, loosen the mounting screws, re-position the fan guard, and tighten the screws. Rotate the fan blade and re-check for adequate clearance. Repeat this procedure until the assembly is positioned properly.

Figure 37 - Proper Position of the Fan Blade on the Motor Shaft

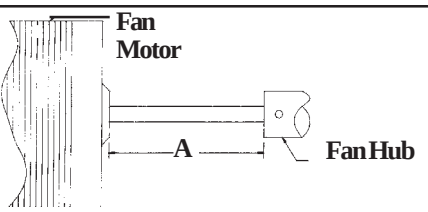

Be sure the fan blade is in proper position on the shaft. Position the fan as shown in Figure 37 according to the chart on the right.

Model Size	Set Screw Torque In-Lbs	"A" Hub to Motor
25	80 + or - 10	1-1/4" (32mm)
50	80 + or - 10	3/8"(10mm)
75	80 + or - 10	1/8" (3mm)
100-125	120 + or - 10	2-1/2" (64mm)
165-400	150 + or - 10	2-1/2" (64mm)

5. If necessary, drill the required upper and lower fan guard mounting holes. Attach the fan guard at all upper and lower mounting points using either the screws removed or field-installed sheet metal screws.

6. Reconnect the fan motor wires and replace the outer side panel.

7. Restore power to the heater and turn on the gas. Light, following the instructions on the lighting instruction plate. Check for proper operation.

39. Vent System

Check the vent system at least once a year. Inspection should include all joints, seams, and the vent cap. Replace any defective parts.

40. Venter Motor

Remove dirt and grease from the motor housing. Power venter motor is permanently lubricated.

The vent relay controls the venter motor. If the relay contacts fail to close the venter motor will not run. If the relay contacts fail to open, the venter motor will not shut off, preventing the combustion air pressure switch from opening.

41. Operating Gas Valve

The gas valve requires no field maintenance except careful removal of external dirt accumulation and checking of wiring connections. Instructions for testing pressure settings are in Paragraph 11.

WARNING: The operating valve is the prime safety shutoff. All gas supply lines must be free of dirt or scale before connecting to the unit to ensure positive closure. See Hazard Levels, page 2.

42. Fan and Limit Controls

If it is determined that the fan or limit control needs replacing, use only factory-authorized replacement parts that are designed for your heater.

Instructions for replacing fan or limit control:

1. Turn off the electric power and shut off the gas supply.
2. Remove the outer left side panel (left when facing the back of the unit). Remove the access panel. (See Figure 38.)
3. Remove defective controls and install new controls in the same mounting holes. Use only factory-authorized replacement parts.
4. Replace access panel and side panel.
5. Turn on the electric power and the gas supply.
6. Relight following the lighting instructions on the heater.

Figure 38 - Access to Controls

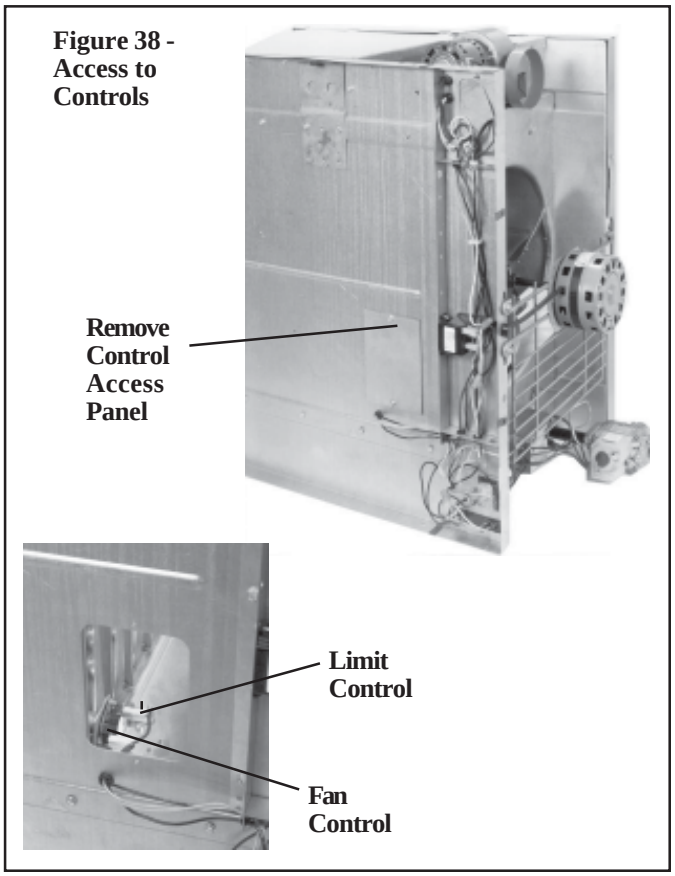

43. Troubleshooting

TROUBLE	PROBABLE CAUSE	REMEDY
Venter motor will not start	**1.** No power to unit. **2.** No 24 volt power to venter relay. **3.** Venter relay defective. **4.** Defective motor or capacitor.	**1.** Turn on power, check supply fuses, or circuit breaker. If unit is equipped with unit-mounted disconnect switch, check circuit breaker (See Paragraph 12). **2.** Turn up thermostat; check control transformer output. **3.** Replace relay. **4.** Replace motor or capacitor.
Pilot will not light (spark ignition system)	**1.** Manual valve not open. **2.** Air in gas line. **3.** Dirt in pilot orifice. **4.** Gas pressure too high or too low. **5.** Kinked pilot tubing. **6.** Pilot valve does not open. **7.** No spark: **a)** Loose wire connections **b)** Transformer failure. **c)** Incorrect spark gap. **d)** Spark cable shorted to ground. **e)** Spark electrode shorted to ground. **f)** Drafts affecting pilot. **g)** Ignition control not grounded. **h)** Faulty ignition controller. **8.** Optional lockout device interrupting control circuit by above causes. **9.** Faulty combustion air proving switch.	**1.** Open manual valve. **2.** Bleed gas line. **3.** Remove and clean with compressed air or solvent (do not ream). **4.** Supply pressure should be 5-14"w.c. for natural gas or 10-14" w.c. for propane gas. (See Paragraph 11.) **5.** Replace tubing. **6.** If 24 volt available at valve, replace valve. **7.** **a)** Be certain all wires connections are solid. **b)** Be certain 24 volts is available. **c)** Maintain spark gap at .100". **d)** Replace worn or grounded spark cable. **e)** Replace pilot if ceramic spark electrode is cracked or grounded. **f)** Make sure all panels are in place and tightly secured to prevent drafts at pilot. **g)** Make certain ignition control is grounded to furnace chassis **h)** If 24 volt is available to ignition controller and all other causes have been eliminated, replace ignition control. **8.** Reset lockout by interrupting control at thermostat. **9.** Replace combustion air proving switch.
Pilot lights, main valve will not open (Spark Ignition system)	**1.** Manual valve not open. **2.** Main valve not operating. **a)** Defective valve. **b)** Loose wire connections. **3.** Ignition control does not power main valve. **a)** Loose wire connections. **b)** Flame sensor grounded. (Pilot lights - spark continues) **c)** Gas pressure incorrect. **d)** Cracked ceramic at sensor. **e)** Faulty ignition controller.	**1.** Open manual valve. **2.** **a)** If 24 volt is measured at valve connections and valve remains closed, replace valve. **b)** Check and tighten all wiring connections. **3.** **a)** Check and tighten all wiring connections. **b)** Be certain flame sensor lead is not grounded or insulation or ceramic is not cracked. Replace as required. **c)** Supply pressure should be 5-14"w.c. for natural gas or 10-14" w.c. for propane gas. (See Paragraph 11.) **d)** Replace sensor. **e)** See Paragraph 34. If all checks indicate no other cause, replace ignition controller. DO NOT ATTEMPT TO REPAIR IGNITION CONTROLLER. THIS DEVICE HAS NO FIELD REPLACEABLE PARTS.
No heat (Heater Operating)	**1.** Incorrect manifold pressure or orifices. **2.** Cycling on limit control. **3.** Improper thermostat location or adjustment.	**1.** Check manifold pressure (See Paragraph 16). **2.** Check air throughput (See Paragraph 16). **3.** See thermostat manufacturer's instructions.
Cold air delivered On Start-up	**1.** Fan control improperly wired **2.** Defective fan control.	**1.** Connect as per wiring diagram. **2.** Replace fan control.
During Operation	**3.** Incorrect manifold pressure.	**3.** Check manifold line pressure (See Paragraph 11).
Motor will not run	**1.** Circuit open. **2.** Fan control inoperative. **3.** Defective motor or capacitor.	**1.** Check wiring and connections. . **2.** Replace fan control. **3.** Replace motor or capacitor.
Motor turns on and off while burner is operating (See motor cuts out on overload below)	**1.** Fan control improperly wired. **2.** Defective fan control. **3.** Poor contact between fan control and heat exchanger tube. Surface contact is required. **4.** Motor overload device cycling on and off. **5.** Low ambient temperature (less than 40°F) causing false cycling.	**1.** Connect as per wiring diagram. **2.** Replace fan control. **3.** Check for bent mounting or loose mounting screws. **4.** Check motor load against motor rating plate. Replace motor if needed. **5.** Install fan delay relay kit (See Paragraph 18.)
Fan motor cuts out on overload	**1.** Low or high voltage supply . **2.** Defective motor. **3.** Poor air flow. **4.** Defective bearing or lubrication.	**1.** Correct electric supply. **2.** Replace motor. **3.** Clean motor, fan and fan guard. **4.** Lubricate bearings or replace motor.
Blower motor cuts out on overload	**1.** Improper motor pulley and/or adjustment. **2.** Improper static pressure in the duct system. **3.** Low voltage.	**1.** See instructions in Paragraph 15. **2.** Adjust duct system dampers. **3.** Check power supply.

INSTALLATION RECORD (TO BE COMPLETED BY INSTALLER)

Model	Serial No.	Date of Installation	Notes
	Installer	Distributor	
Name			
Company			
Address			
Phone No.			

For more information on Reznor HVAC products:

- **Contact your local Reznor representative at 1-800-695-1901**
- **Refer to the technical specifications, manuals, and consumer materials found at www.reznorhvac.com**

Specifications and illustrations subject to change without notice or incurring obligations.
Latest version of this manual is available at **www.reznorhvac.com**.
©2026 Reznor LLC, Saint Charles, MO. All rights reserved.
FE-BE-IOM (05-26) 098807-A